DeviceNet

Operation Manual Fourteenth Edition

X-SEL
TT
RCS-C
E-Con
SCON
SSEL
ACON
PCON

IAI America, Inc.

Safety Precautions

Please read the information in “Safety Precautions” carefully before selecting a model and using the product.
The precautions described below are designed to help you use the product safely and avoid bodily injury and/or property damage.

Directions are classified as “danger,” “warning,” “caution” and “note,” according to the degree of risk.

⚠ Danger	Failure to observe the instruction will result in an imminent danger leading to death or serious injury.
⚠ Warning	Failure to observe the instruction may result in death or serious injury.
⚠ Caution	Failure to observe the instruction may result in injury or property damage.
Note	The user should take heed of this information to ensure the proper use of the product, although failure to do so will not result in injury.

This product has been designed and manufactured as a component for use in general industrial machinery.

Devices must be selected and handled by a system designer, personnel in charge of the actual operation using the product or similar individual with sufficient knowledge and experience, who has read both the catalog and operation manual (particularly the “Safety Precautions” section). Mishandling of the product poses a risk.
Please read the operation manuals for all devices, including the main unit and controller.
It is the user’s responsibility to verify and determine the compatibility of this product with the user’s system, and to use them properly.
After reading the catalog, operation manual and other materials, be sure to keep them in a convenient place easily accessible to the personnel using this product.
When transferring or loaning this product to a third party, be sure to attach the catalog, operation manual and other materials in a conspicuous location on the product, so that the new owner or user can understand its safe and proper use.
The danger, warning and caution directions in this “Safety Precautions” do not cover every possible case. Please read the catalog and operation manual for the given device, particularly for descriptions unique to it, to ensure its safe and proper handling.

⚠ Danger

[General]

- Do not use this product for the following applications:
  1. Medical equipment used to maintain, control or otherwise affect human life or physical health
  2. Mechanisms and machinery designed for the purpose of moving or transporting people
  3. Important safety parts of machinery
     This product has not been planned or designed for applications requiring high levels of safety. Use of this product in such applications may jeopardize the safety of human life. The warranty covers only the product as it is delivered.

[Installation]

- Do not use this product in a place exposed to ignitable, inflammable or explosive substances. The product may ignite, burn or explode.
- Avoid using the product in a place where the main unit or controller may come in contact with water or oil droplets.
- Never cut and/or reconnect the cables supplied with the product for the purpose of extending or shortening the cable length. Doing so may result in fire.

[Operation]

- If you are using a pace maker or other mechanical implant, do not come within one meter of the product. The strong magnetic field generated by the product may cause the pace maker, etc., to malfunction.
- Do not pour water onto the product. Spraying water over the product, washing it with water or using it in water may cause the product to malfunction, resulting in injury, electric shock, fire, etc.

[Maintenance, Inspection, Repair]

- Never modify the product. Unauthorized modification may cause the product to malfunction, resulting in injury, electric shock, fire, etc.
- Do not disassemble and reassemble the components relating to the basic structure of the product or its performance and function. Doing so may result in injury, electric shock, fire, etc.

⚠ Warning

[General]

- Do not use the product outside the specifications. Using the product outside the specifications may cause it to fail, stop functioning or sustain damage. It may also significantly reduce the service life of the product. In particular, observe the maximum loading capacity and speed.

[Installation]

- If the machine will stop in the case of system problem such as emergency stop or power failure, design a safety circuit or other device that will prevent equipment damage or injury.
- Be sure to provide Class D grounding for the controller and actuator (formerly Class 3 grounding: Grounding resistance at 100 Ω or less). Leakage current may cause electric shock or malfunction.
- Before supplying power to and operating the product, always check the operation area of the equipment to ensure safety. Supplying power to the product carelessly may cause electric shock or injury due to contact with the moving parts.
- Wire the product correctly by referring to the operation manual. Securely connect the cables and connectors so that they will not be disconnected or come loose. Failure to do so may cause the product to malfunction or cause fire.

[Operation]

- Do not touch the terminal block or various switches while the power is supplied to the product. Failure to observe this instruction may result in electric shock or malfunction.
- Before operating the moving parts of the product by hand (for the purpose of manual positioning, etc.), confirm that the servo is turned off (using the teaching pendant). Failure to observe this instruction may result in injury.
- The cables supplied with the product are flexible, but they are not robot cables. Do not store the cables in a movable cable duct (cable bearer, etc.) that bends more than the specified bending radius.
- Do not scratch the cables. Scratching, forcibly bending, pulling, winding, crushing with heavy object or pinching a cable may cause it to leak current or lose continuity, resulting in fire, electric shock, malfunction, etc.

- Turn off the power to the product in the event of power failure. Failure to do so may cause the product to suddenly start moving when the power is restored, thus resulting in injury or product damage.
- If the product is generating heat, smoke or a strange smell, turn off the power immediately. Continuing to use the product may result in product damage or fire.
- If any of the internal protective devices (alarms) of the product has actuated, turn off the power immediately. Continuing to use the product may result in product damage or injury due to malfunction. Once the power supply is cut off, investigate and remove the cause and then turn on the power again.
- If the LEDs on the product do not illuminate after turning on the power, turn off the power immediately. The protective device (fuse, etc.) on the live side may remain active. Request repair to the IAI sales office from which you purchased the product.

[Maintenance, Inspection, Repair]

- Before conducting maintenance/inspection, parts replacement or other operations on the product, completely shut down the power supply. At this time, take the following measures:
  1. Display a sign that reads, “WORK IN PROGRESS. DO NOT TURN ON POWER” at a conspicuous place, in order to prevent a person other than the operator from accidentally turning on the power while the operation is working.
  2. When two or more operators are to perform maintenance/inspection together, always call out every time the power is turned on/off or an axis is moved in order to ensure safety.

[Disposal]

- Do not throw the product into fire. The product may burst or generate toxic gases.

⚠ Caution

[Installation]

- Do not use the product under direct sunlight (UV ray), in a place exposed to dust, salt or iron powder, in a humid place, or in an atmosphere of organic solvent, phosphate-ester machine oil, sulfur dioxide gas, chlorine gas, acids, etc. The product may lose its function over a short period of time, or exhibit a sudden drop in performance or its service life may be significantly reduced.
- Do not use the product in an atmosphere of corrosive gases (sulfuric acid or hydrochloric acid), inflammable gases or ignitable liquids. Rust may form and reduce the structural strength or the motor may ignite or explode.
- When using the product in any of the places specified below, provide a sufficient shield. Failure to do so may result in malfunction:
  1. Place where large current or high magnetic field is present
  2. Place where welding or other operations are performed that cause arc discharge
  3. Place subject to electrostatic noise
  4. Place with potential exposure to radiation
- Install the main unit and controller in a place subject to as little dust as possible. Installing them in a dusty place may result in malfunction.
- Do not install the product in a place subject to large vibration or impact (4.9 m/s2 or more). Doing so may result in the malfunctioning of the product.
- Provide an emergency-stop device in a readily accessible position so the device can be actuated immediately upon occurrence of a dangerous situation during operation. Lack of such device in an appropriate position may result in injury.
- Provide sufficient maintenance space when installing the product. Routine inspection and maintenance cannot be performed without sufficient space, which will eventually cause the equipment to stop or the product to sustain damage.
- Do not hold the moving parts of the product or its cables during installation. It may result in injury.
- Always use IAI’s genuine cables for connection between the controller and the actuator. Also use IAI’s genuine products for the key component units such as the actuator, controller and teaching pendant.

- Before installing or adjusting the product or performing other operations on the product, display a sign that reads, “WORK IN PROGRESS. DO NOT TURN ON POWER.” If the power is turned on inadvertently, injury may result due to electric shock or sudden activation of an actuator.

[Operation]

- Turn on the power to individual equipment one by one, starting from the equipment at the highest level in the system hierarchy. Failure to do so may cause the product to start suddenly, resulting in injury or product damage.
- Do not insert a finger or object in the openings in the product. It may cause fire, electric shock or injury.
- Do not bring a floppy disk or other magnetic media within one meter of the product. The magnetic field generated by the magnet may destroy the data in the floppy disk, etc.

[Maintenance, Inspection, Repair]

- Do not touch the terminals when performing an insulation resistance test. Electric shock may result. (Do not perform any withstand voltage test, since the product uses DC voltage.)

Note

[General]

- If you are planning to use the product under a condition or environment not specified in the catalogs and operation manual, or in an application requiring strict safety such as aircraft facility, combustion system, entertainment machine, safety device or other equipment having significant impact on human life or property, design operating ranges with sufficient margins from the ratings and design specifications or provide sufficient safety measures such as fail-safes. Whatever you do, always consult IAI’s sales representative.

[Installation]

- Do not place objects around the controller that will block airflows. Insufficient ventilation may damage the controller.
- Do not configure a control circuit that will cause the work to drop in case of power failure. Configure a control circuit that will prevent the table or work from dropping when the power to the machine is cut off or an emergency stop is actuated.

[Installation, Operation, Maintenance]

- When handling the product, wear protective gloves, protective goggles, safety shoes or other necessary gear to ensure safety.

[Disposal]

- When the product becomes no longer usable or necessary, dispose of it properly as an industrial waste.

Others

- IAI shall not be liable whatsoever for any loss or damage arising from a failure to observe the items specified in “Safety Precautions.”
- If you have any question regarding the product, contact the IAI sales office near you. The addresses and phone numbers of our sales offices are listed at the end of the catalog.

Table of Contents

1. Overview

DeviceNet, which is an open field network, is a multiple-bit type multi-vendor network that combines controls and data on a machine/line control level.
By connecting to DeviceNet, X-SEL, TT, RCS-C, E-CON, SSEL, ACON, PCON and SCON controllers (hereinafter referred to collectively as “controllers” or individually as a “controller”) can be used to configure a system based on minimal wiring.

X-SEL, TT, RCS-C, E-CON, SSEL, ACON, PCON and SCON controllers are treated as remote I/O terminals on DeviceNet networks.

* For details of DeviceNet, refer to the operation manual for the programmable controller (hereinafter referred to as “PLC”) in which the master unit is installed.
When reading this Operation Manual, also refer to the operation manual for the X-SEL, TT, RCS-C, E-CON, SSEL, ACON, PCON and SCON controller you are using.

Take note that operations and uses not expressly permitted in this Operation Manual should be considered prohibited.

Example of system configuration

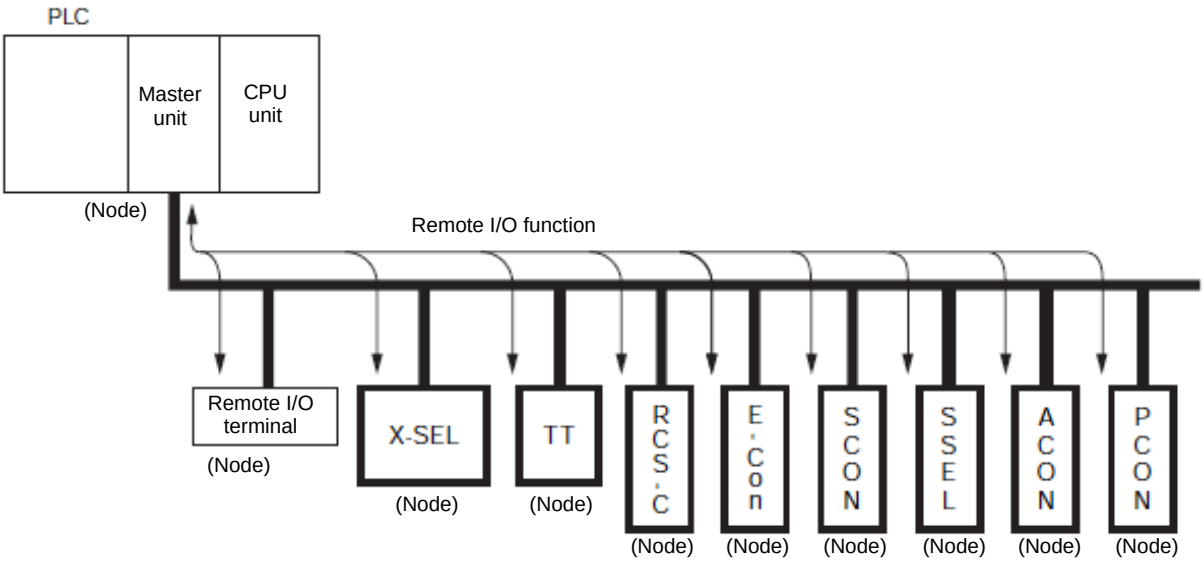

2. X-SEL

2.1 Models

DeviceNet-ready X-SEL controllers come in six different models as specified below.

● Installation position of DeviceNet board

No.	Controller type	Network I/O points (maximum inputs/outputs)	Board installation position: Standard slot (I/O1)	Expansion slot 1 (I/O2)	Expansion slot 2 (I/O3)	Expansion slot 3 (I/O4)	X-SEL model		I/O slot arrangement
1	J type	256/256	●				1 axis	XSEL-J-1-□-DV-□-□-□	Fig. 2-1
							2 axes	XSEL-J-2-□-□-DV-□-□-□	
2			●				3 axes	XSEL-J-3-□-□-□-DV-□-□-□	
							4 axes	XSEL-J-4-□-□-□-□-DV-□-□-□	
3	K type	256/256	●				1 axis	XSEL-K-1-□-DV-□-□-□	Fig. 2-2
							⋮		
							4 axes	XSEL-K-4-□-□-□-□-DV-□-□-□	
4	JX type	256/256	●					XSEL-JX-□□□□□□□□-DV-□□□-□-□	*1
5	KX type	256/256	●					XSEL-KX-□□□□□□□□-DV-□□□-□-□	*2
6	P type	256/256	Installation position of field network board				1 axis	XSEL-P-1-□-DV-□-□-□-3	Fig. 2-3
								⋮	
							6 axes	XSEL-P-6-□-□-□-□-□-□-DV-□-□-□-3	
	Q type	256/256					1 axis	XSEL-Q-1-□-DV-□-□-□-3	*3
								⋮	
							6 axes	XSEL-Q-6-□-□-□-□-□-□-DV-□-□-□-3	
7	PX type	256/256	Installation position of field network board				4 axes	XSEL-PX4-□□□□□□□□-DV-	*3
							5 axes	XSEL-PX5-□□□□□□□□-□□□□□-DV-	
							6 axes	XSEL-PX6-□□□□□□□□-□□□□□-□□□□□□-DV-	
	QX type	256/256					4 axes	XSEL-QX4-□□□□□□□□-DV-	*3
							5 axes	XSEL-QX5-□□□□□□□□-□□□□□-DV-	
							6 axes	XSEL-QX6-□□□□□□□□-□□□□□-□□□□□□-DV-	

*1 The installation position of DeviceNet board is the same as the position for the 4-axis specification shown in Fig. 2-1.
*2 The installation position of DeviceNet board is the same as the position shown in Fig. 2-2.
*3 The installation position of DeviceNet board is the same as the position shown in Fig. 2-3. Even when there are five or six axes, the installation position of DeviceNet board is the same as the position for the 4-axis specification.

(1) Compact type (J type)

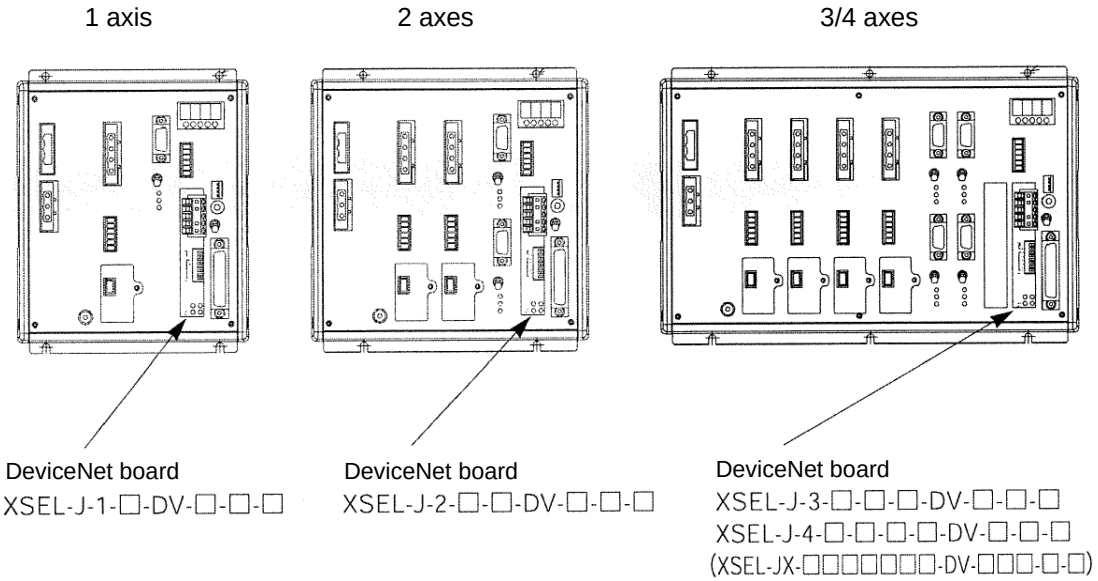

(Note) I/O boards cannot be installed in controllers of 1/2-axis specifications. Only one expansion I/O board (Note 1) can be installed in controllers of 3/4-axis specifications.

Fig. 2-1

(2) General-purpose type (K type)

- A DeviceNet board is installed in the standard slot (I/O1 --- the slot at the far left).
- Either an expansion I/O board (Note 1) or SIO board (Note 2) can be installed in each expansion slot.

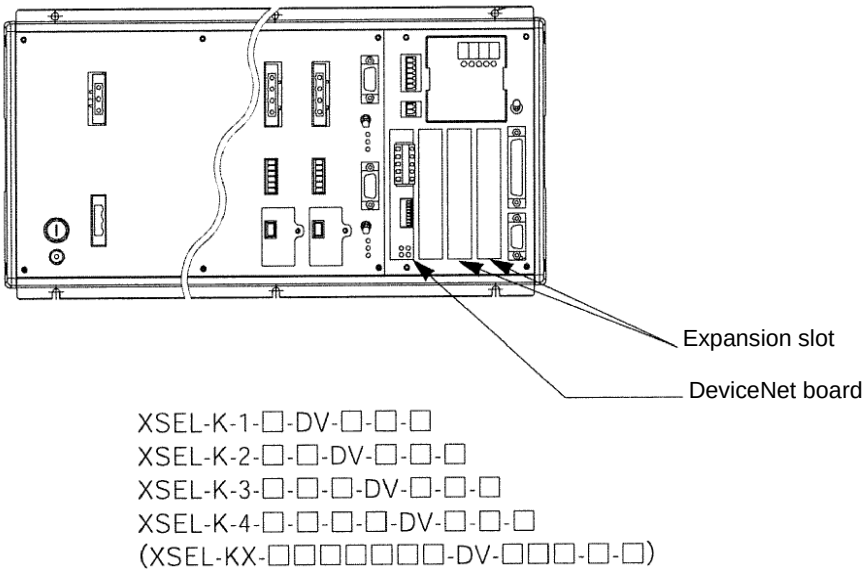

Fig. 2-2

(3) P/Q types

- A DeviceNet board is installed in the installation position of field network board.

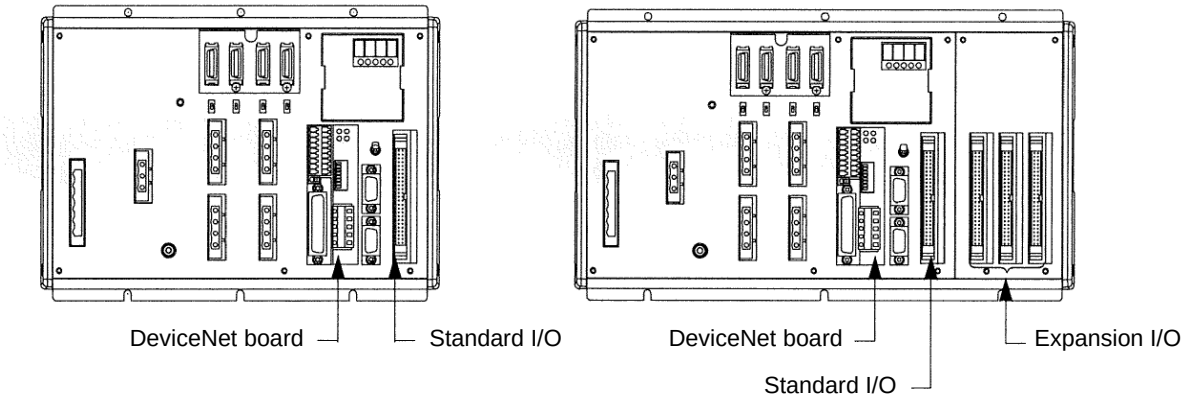

X-SEL-P-1-□-DV-□-□-□-3
X-SEL-P-2-□-□-DV-□-□-□-3
X-SEL-P-3-□-□-□-DV-□-□-□-3
X-SEL-P-4-□-□-□-□-DV-□-□-□-3
X-SEL-P-5-□-□-□-□-□-DV-□-□-□-3
X-SEL-P-6-□-□-□-□-□-□-DV-□-□-□-3

(X-SEL-Q-1-□-DV-□-□-□-3
X-SEL-Q-2-□-□-DV-□-□-□-3
X-SEL-Q-3-□-□-□-DV-□-□-□-3
X-SEL-Q-4-□-□-□-□-DV-□-□-□-3
X-SEL-Q-5-□-□-□-□-□-DV-□-□-□-3
X-SEL-Q-6-□-□-□-□-□-□-DV-□-□-□-3)

Fig. 2-3

(Note 1) Expansion I/O board

Model [1] IA-103-X-32 (32 input points/16 output points, NPN specification)
[2] IA-103-X-32-P (32 input points/16 output points, PNP specification)
[3] IA-103-X-16 (16 input points/32 output points, NPN specification)
[4] IA-103-X-16-P (16 input points/32 output points, PNP specification)
[5] IA-IO-3204-NP (48 input points/48 output points, NPN specification)
[6] IA-IO-3204-PN (48 input points/48 output points, PNP specification)
[7] IA-IO-3205-NP (48 input points/48 output points, NPN specification)
[8] IA-IO-3205-PN (48 input points/48 output points, PNP specification)
(Note) [5] and [6] are used for K/P/Q types only, while [7] and [8] are used for J type only.

For details of each specification, refer to the “Operation Manual for X-SEL Controller.”

(Note 2) SIO board

Model [1] IA-105-X-MW-A (RS232C)
[2] IA-105-X-MW-B (RS422)
[3] IA-105-X-MW-C (RS485)

With all boards, one board supports two channels.

2.2 Interface Specifications

The DeviceNet interface specifications are summarized below.

<table>
<tr><th>Item</th><th colspan="4">Specification</th></tr>
<tr><td rowspan="3">Communication protocol</td><td colspan="4">A certified DeviceNet 2.0 interface module is used (certification pending).</td></tr>
<tr><td colspan="4">Group 2 only server</td></tr>
<tr><td colspan="4">Network-powered insulation node</td></tr>
<tr><td rowspan="3">Communication specification</td><td colspan="2" rowspan="3">Master-slave connection</td><td colspan="2">Bit strobe</td></tr>
<tr><td colspan="2">Polling</td></tr>
<tr><td colspan="2">Cyclic</td></tr>
<tr><td>Baud rate</td><td colspan="4">500 k / 250 k / 125 kbps (selectable by DIP switches)</td></tr>
<tr><td rowspan="5">Communication cable length</td><td>Baud rate</td><td>Maximum network length</td><td>Maximum branch line length</td><td>Total branch line length</td></tr>
<tr><td>500 kbps</td><td>100 m</td><td rowspan="3">6 m</td><td>39 m</td></tr>
<tr><td>250 kbps</td><td>250 m</td><td>78 m</td></tr>
<tr><td>125 kbps</td><td>500 m</td><td>156 m</td></tr>
<tr><td colspan="4">Note) When a large-size DeviceNet cable is used.</td></tr>
<tr><td>Communication power supply</td><td colspan="4">24 VDC (supplied from DeviceNet)</td></tr>
<tr><td>Consumption current of communication power supply</td><td colspan="4">60 mA</td></tr>
<tr><td>Number of occupied nodes</td><td colspan="4">1 node</td></tr>
<tr><td>Connector</td><td colspan="4">MSTBA2.5/5-G-5.08AU M (*1) by Phoenix Contact</td></tr>
</table>

(*1) The cable-end connector is a standard accessory.
SMSTB2.5/5-ST-5.08AU by Phoenix Contact

2.3 DeviceNet board

2.3.1 Name of Each Part

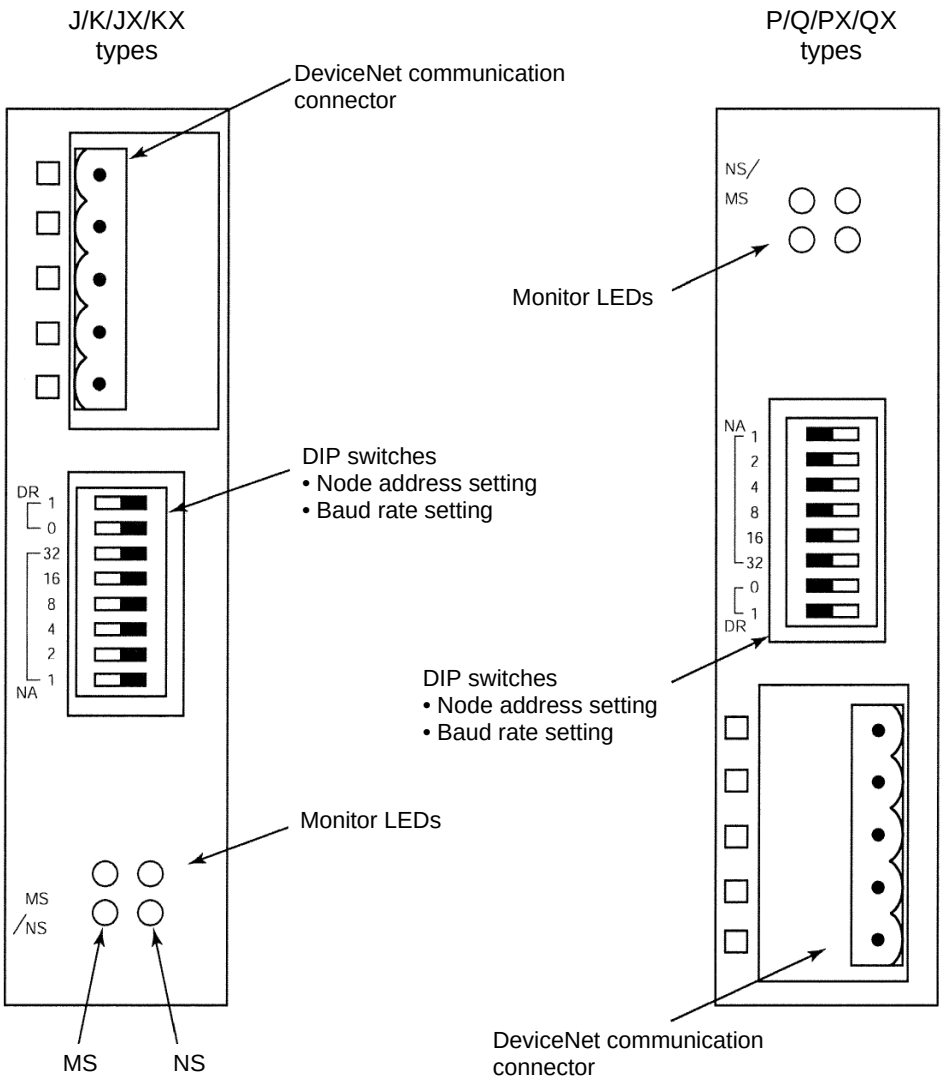

2.3.2 DIP Switch Settings

The DIP switches are used to set the following items:

(1) Node address
(2) Baud rate
(Note) Turn off the X-SEL power before setting the DIP switches.

(1) Setting the node address (MAC ID)

Set the node address (MAC ID) using a hexadecimal value according to the table below.

1: ON 0: OFF

	DIP switches					
Node address (MAC ID)	NA32	NA16	NA8	NA4	NA2	NA1
0	0	0	0	0	0	0
1	0	0	0	0	0	1
2	0	0	0	0	1	0
3	0	0	0	0	1	1
⋮	⋮	⋮	⋮	⋮	⋮	⋮
60	1	1	1	1	0	0
61	1	1	1	1	0	1
62	1	1	1	1	1	0
63	1	1	1	1	1	1

(Note) The node address corresponds to the remote I/O address in the PLC. This DeviceNet card supports a maximum of 256 input points and 256 output points. Accordingly, the node address corresponding to the I/O points used will be occupied in the PLC.
Take note that all node addresses must be unique.
(For details, refer to the operation manual for the PLC.)

(2) Setting the baud rate

Set the baud rate according to the table below.

1: ON 0: OFF

	DIP switches	
Baud rate	DR1	DR0
125 kbps	0	0
250 kbps	0	1
500 kbps	1	0
Setting prohibited	1	1

2.3.3 Monitor LED Indicators

The two LEDs, MS and NS, provided on the front panel of the board are used to check the board (node) condition and network condition. (The remaining two LEDs are not currently used.)
The LEDs illuminate in two colors (red and green), and you can monitor the conditions listed in the table below based on the illumination status and color of each LED.

MS (Module Status) LED: Condition of the board (node) itself
NS (Network Status) LED: Condition of the network

LED	Color	Illumination status	Description (meaning)
MS	Green	Steady light	The board is operating normally.
	Red	Steady light	A hardware error occurred. The board must be replaced.
		Blinking	A minor error occurred, such as a DIP switch setting error or configuration error. The error can be reset by, for example, reconfiguring the applicable setting.
	-	Off	Power is not supplied from the X-SEL controller. The X-SEL controller must be repaired or the board must be replaced.
NS	Green	Steady light	Network connection has been established and the board is communicating normally.
		Blinking	The board is online, but network connection is not yet established. Communication is stopped. (The network is normal.)
	Red	Steady light	Node address duplication or bus-off state was detected. Communication is not possible.
		Blinking	A communication error occurred (communication time-out occurred).
	-	Off	• The board is not online. • DeviceNet power is not supplied.

Self test is performed when the power is turned on.
During the test, the monitor LEDs cycle in the following sequence:
[1] NS turns off.
[2] MS illuminates in steady green (approx. 0.25 second).
[3] MS illuminates in steady red (approx. 0.25 second).
[4] MS illuminates in steady green.
[5] NS illuminates in steady green (approx. 0.25 second).
[6] NS illuminates in steady red (approx. 0.25 second).
[7] NS turns off.
When the self test is finished and the board starts communicating normally, both the MS and NS LEDs change to steady green.

2.4 Setting of I/O Parameters (Assignment of I/O Ports)

Set the X-SEL I/O ports to be used in DeviceNet communication. X-SEL controllers support various I/O port settings through use of I/O parameters. (For details, refer to the “Operation Manual for X-SEL Controller.”)
A representative method to set I/O parameters is explained below.
The basic steps are to set I/O Parameter No. 1, “I/O port assignment type” to “Fixed assignment” and then set I/O port addresses for each I/O slot.

2.4.1 Board Installation Position (Slot) and I/O Parameter Numbers

(1) J type

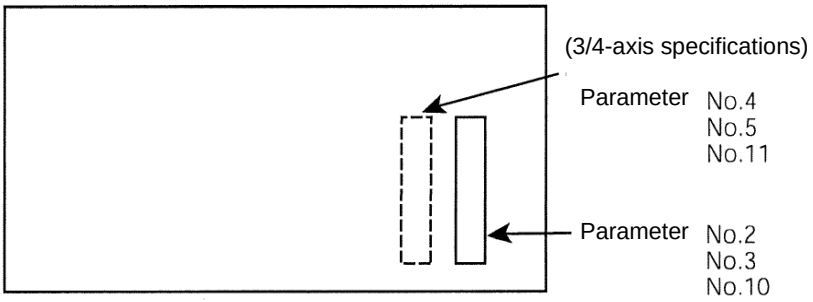

(Note) On J-type controllers, Parameter Nos. 6 to 9 are all set to “-1,” while Parameter Nos. 12 and 13 are set to “0,” because expansion I/O slots 2 and 3 are not available.
On controllers of 1/2-axis specifications, similarly Nos. 4 and 5 are both set to “-1,” while No. 11 is set to “0.”

(2) K type

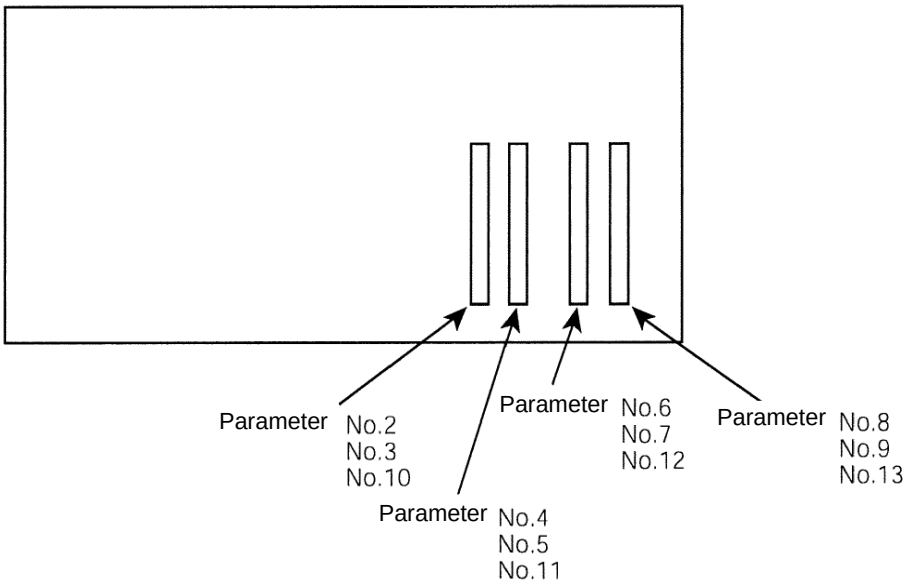

2.4.2 Factory-set Parameters

(1) Factory-set parameters for J/K types

No.	Parameter name	Input range	Setting	Remarks
1	I/O port assignment type	0 ~ 20	0	0: Fixed assignment 1: Automatic assignment (Priority: Assigned from slot 1) * Ports are assigned consecutively only for slots where a board is physically installed, starting from slot 1, for safety reasons.
2	Input port start number for standard I/O based on fixed assignment (I/O1)	-1 ~ 599	000	0 + (multiple of 8) (Invalid, if a value is entered with a negative sign.)
3	Output port start number for standard I/O based on fixed assignment (I/O1)	-1 ~ 599	300	300 + (multiple of 8) (Invalid, if a value is entered with a negative sign.)
4	Input port start number for expansion I/O1 based on fixed assignment (I/O2)	-1 ~ 599	-1	0 + (multiple of 8) (Invalid, if a value is entered with a negative sign.) (Slot immediately next to the standard I/O slot)
5	Output port start number for expansion I/O1 based on fixed assignment (I/O2)	-1 ~ 599	-1	300 + (multiple of 8) (Invalid, if a value is entered with a negative sign.)
6	Input port start number for expansion I/O2 based on fixed assignment (I/O3)	-1 ~ 599	-1	0 + (multiple of 8) (Invalid, if a value is entered with a negative sign.)
7	Output port start number for expansion I/O2 based on fixed assignment (I/O3)	-1 ~ 599	-1	300 + (multiple of 8) (Invalid, if a value is entered with a negative sign.)
8	Input port start number for expansion I/O3 based on fixed assignment (I/O4)	-1 ~ 599	-1	0 + (multiple of 8) (Invalid, if a value is entered with a negative sign.)
9	Output port start number for expansion I/O3 based on fixed assignment (I/O4)	-1 ~ 599	-1	300 + (multiple of 8) (Invalid, if a value is entered with a negative sign.)
10	Error monitor for standard I/O (I/O1)	0 ~ 5	2	0: Do not monitor 1: Monitor 2: Monitor (Do not monitor 24-V I/O power supply errors) (Main application version 0.55 or later) 3: Monitor (Monitor 24-V I/O power supply errors only) (Main application version 0.55 or later)
11	Error monitor for expansion I/O1 (I/O2)	0 ~ 5	0	
12	Error monitor for standard I/O2 (I/O3)	0 ~ 5	0	
13	Error monitor for expansion I/O3 (I/O4)	0 ~ 5	0	
14	Number of ports used for remote input via network I/F card	0 ~ 256	64	Multiple of 8
15	Number of ports used for remote output via network I/F card	0 ~ 256	64	Multiple of 8

I/O1 through I/O4 indicate slot numbers.

(2) Factory-set parameters for P/Q types

No.	Parameter name	Input range	Setting	Remarks
1	I/O port assignment type	0 ~ 20	0	0: Fixed assignment 1: Automatic assignment (Priority: Assigned from slot 1) * Ports are assigned consecutively only for slots where a board is physically installed, starting from slot 1, for safety reasons.
2	Input port start number for standard I/O based on fixed assignment (I/O1)	-1 ~ 599	-1	0 + (multiple of 8) (Invalid, if a value is entered with a negative sign.)
3	Output port start number for standard I/O based on fixed assignment (I/O1)	-1 ~ 599	-1	300 + (multiple of 8) (Invalid, if a value is entered with a negative sign.)
4	Input port start number for expansion I/O1 based on fixed assignment (I/O2)	-1 ~ 599	-1	0 + (multiple of 8) (Invalid, if a value is entered with a negative sign.) (Slot immediately next to the standard I/O slot)
5	Output port start number for expansion I/O1 based on fixed assignment (I/O2)	-1 ~ 599	-1	300 + (multiple of 8) (Invalid, if a value is entered with a negative sign.)
6	Input port start number for expansion I/O2 based on fixed assignment (I/O3)	-1 ~ 599	-1	0 + (multiple of 8) (Invalid, if a value is entered with a negative sign.)
7	Output port start number for expansion I/O2 based on fixed assignment (I/O3)	-1 ~ 599	-1	300 + (multiple of 8) (Invalid, if a value is entered with a negative sign.)
8	Input port start number for expansion I/O3 based on fixed assignment (I/O4)	-1 ~ 599	-1	0 + (multiple of 8) (Invalid, if a value is entered with a negative sign.)
9	Output port start number for expansion I/O3 based on fixed assignment (I/O4)	-1 ~ 599	-1	300 + (multiple of 8) (Invalid, if a value is entered with a negative sign.)
10	Error monitor for standard I/O (I/O1)	0 ~ 5	0	0: Do not monitor 1: Monitor 2: Monitor (Do not monitor 24-V I/O power supply errors) (Main application version 0.55 or later) 3: Monitor (Monitor 24-V I/O power supply errors only) (Main application version 0.55 or later)
11	Error monitor for expansion I/O1 (I/O2)	0 ~ 5	0	
12	Error monitor for standard I/O2 (I/O3)	0 ~ 5	0	
13	Error monitor for expansion I/O3 (I/O4)	0 ~ 5	0	
14	Number of ports used for remote input via network I/F card	0 ~ 256	64	Multiple of 8
15	Number of ports used for remote output via network I/F card	0 ~ 256	64	Multiple of 8
16	Input port start number for network I/F module based on fixed assignment	-1 ~ 599	0	0 + (multiple of 8) (Invalid, if a value is entered with a negative sign.)
17	Output port start number for network I/F module based on fixed assignment	-1 ~ 599	300	300 + (multiple of 8) (Invalid, if a value is entered with a negative sign.)
18	Error monitor for network I/F module	0 ~ 5	1	0: Do not monitor 1: Monitor * Some exceptions apply.

I/O1 through I/O4 indicate slot numbers.

(3) P/Q types

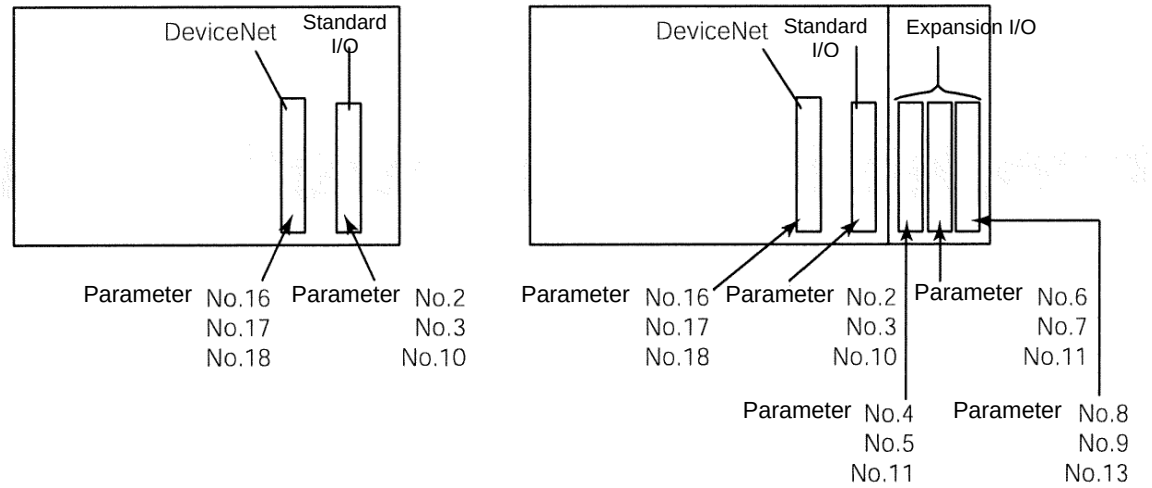
DeviceNet
Standard I/O
Parameter No.16 No.17 No.18
Parameter No.2 No.3 No.10
DeviceNet
Standard I/O
Expansion I/O
Parameter No.16 No.17 No.18
Parameter No.2 No.3 No.10
Parameter No.6 No.7 No.11
Parameter No.4 No.5 No.11
Parameter No.8 No.9 No.13

2.5 Parameter Setting Examples

2.5.1 Setting Example for J/K Types

(1) Setting example when only a DeviceNet board is installed

Assign 32 input points and 16 output points to the DeviceNet board from the first standard I/O port, as you would for the standard X-SEL I/O board (50-pin connector), and do not use any other I/O port.
* In this case, the I/O power connector need not be connected to 24 VDC (K type).

X-SEL (J type)

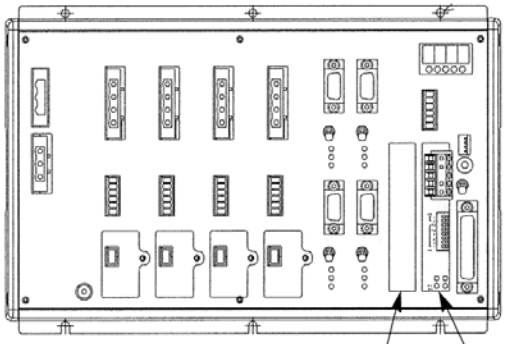

Not used.
(Not available on controllers of 1/2-axis specifications.)

Input port Nos. 000 to 031
Output port Nos. 300 to 315

X-SEL (K type)

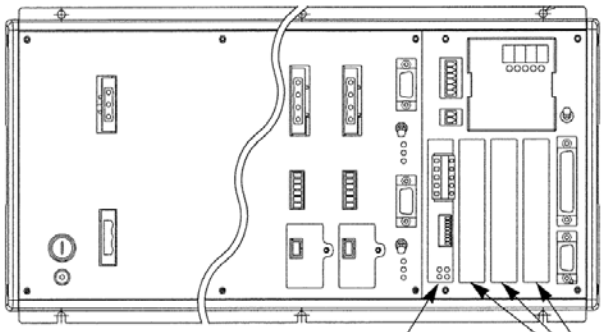

Input port Nos. 000 to 031
Output port Nos. 300 to 315

Not used.

(This example assumes the installed condition shown in Fig. 2-1 and Fig. 2-2 under 2.1.)

I/O parameters for X-SEL J/K types

No.	Parameter name	Default value (reference)	Input range	Setting	Remarks
1	I/O port assignment type	0	0 ~ 20	0	0: Fixed assignment 1: Automatic assignment (Priority: Assigned from slot 1) * Ports are assigned consecutively only for slots where a board is physically installed, starting from slot 1, for safety reasons.
2	Input port start number for standard I/O based on fixed assignment (I/O1)	000	-1 ~ 599	000	0 + (multiple of 8) (Invalid, if a value is entered with a negative sign.)
3	Output port start number for standard I/O based on fixed assignment (I/O1)	300	-1 ~ 599	300	300 + (multiple of 8) (Invalid, if a value is entered with a negative sign.)
4	Input port start number for expansion I/O1 based on fixed assignment (I/O2)	-1	-1 ~ 599	-1	0 + (multiple of 8) (Invalid, if a value is entered with a negative sign.) (Slot immediately next to the standard I/O slot)
5	Output port start number for expansion I/O1 based on fixed assignment (I/O2)	-1	-1 ~ 599	-1	300 + (multiple of 8) (Invalid, if a value is entered with a negative sign.)
6	Input port start number for expansion I/O2 based on fixed assignment (I/O3)	-1	-1 ~ 599	-1	0 + (multiple of 8) (Invalid, if a value is entered with a negative sign.)
7	Output port start number for expansion I/O2 based on fixed assignment (I/O3)	-1	-1 ~ 599	-1	300 + (multiple of 8) (Invalid, if a value is entered with a negative sign.)
8	Input port start number for expansion I/O3 based on fixed assignment (I/O4)	-1	-1 ~ 599	-1	0 + (multiple of 8) (Invalid, if a value is entered with a negative sign.)
9	Output port start number for expansion I/O3 based on fixed assignment (I/O4)	-1	-1 ~ 599	-1	300 + (multiple of 8) (Invalid, if a value is entered with a negative sign.)
10	Error monitor for standard I/O (I/O1)	2	0 ~ 5	2	0: Do not monitor 1: Monitor 2: Monitor (Do not monitor 24-V I/O power supply errors) (Main application version 0.55 or later) 3: Monitor (Monitor 24-V I/O power supply errors only) (Main application version 0.55 or later)
11	Error monitor for expansion I/O1 (I/O2)	0	0 ~ 5	0	
12	Error monitor for standard I/O2 (I/O3)	0	0 ~ 5	0	
13	Error monitor for expansion I/O3 (I/O4)	0	0 ~ 5	0	
14	Number of ports used for remote input via network I/F card	64	0 ~ 256	32	Multiple of 8
15	Number of ports used for remote output via network I/F card	64	0 ~ 256	16	Multiple of 8

I/O1 through I/O4 indicate slot numbers.

(2) Setting example when a DeviceNet board is used together with an expansion I/O board

a. Assign 256 input points and 256 output points to the DeviceNet board from the first standard I/O port, and assign the subsequent I/O port numbers to the expansion I/O board IA-103-X-32 (32 input points, 16 output points).
The same settings apply to J-type controllers.

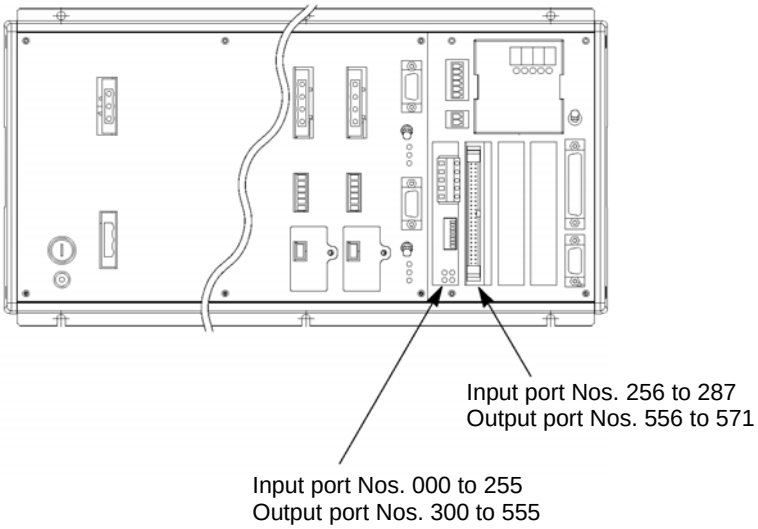

I/O parameters for X-SEL J/K types

No.	Parameter name	Default value (reference)	Input range	Setting	Remarks
1	I/O port assignment type	0	0 ~ 20	0	0: Fixed assignment 1: Automatic assignment (Priority: Assigned from slot 1) * Ports are assigned consecutively only for slots where a board is physically installed, starting from slot 1, for safety reasons.
2	Input port start number for standard I/O based on fixed assignment (I/O1)	000	-1 ~ 599	000	0 + (multiple of 8) (Invalid, if a value is entered with a negative sign.)
3	Output port start number for standard I/O based on fixed assignment (I/O1)	300	-1 ~ 599	300	300 + (multiple of 8) (Invalid, if a value is entered with a negative sign.)
4	Input port start number for expansion I/O1 based on fixed assignment (I/O2)	-1	-1 ~ 599	256	0 + (multiple of 8) (Invalid, if a value is entered with a negative sign.) (Slot immediately next to the standard I/O slot)
5	Output port start number for expansion I/O1 based on fixed assignment (I/O2)	-1	-1 ~ 599	556	300 + (multiple of 8) (Invalid, if a value is entered with a negative sign.)
6	Input port start number for expansion I/O2 based on fixed assignment (I/O3)	-1	-1 ~ 599	-1	0 + (multiple of 8) (Invalid, if a value is entered with a negative sign.)
7	Output port start number for expansion I/O2 based on fixed assignment (I/O3)	-1	-1 ~ 599	-1	300 + (multiple of 8) (Invalid, if a value is entered with a negative sign.)
8	Input port start number for expansion I/O3 based on fixed assignment (I/O4)	-1	-1 ~ 599	-1	0 + (multiple of 8) (Invalid, if a value is entered with a negative sign.)
9	Output port start number for expansion I/O3 based on fixed assignment (I/O4)	-1	-1 ~ 599	-1	300 + (multiple of 8) (Invalid, if a value is entered with a negative sign.)
10	Error monitor for standard I/O (I/O1)	2	0 ~ 5	2	0: Do not monitor 1: Monitor 2: Monitor (Do not monitor 24-V I/O power supply errors) (Main application version 0.55 or later) 3: Monitor (Monitor 24-V I/O power supply errors only)
11	Error monitor for expansion I/O1 (I/O2)	1	0 ~ 5	1	
12	Error monitor for standard I/O2 (I/O3)	0	0 ~ 5	0	
13	Error monitor for expansion I/O3 (I/O4)	0	0 ~ 5	0	
14	Number of ports used for remote input via network I/F card	64	0 ~ 256	256	Multiple of 16
15	Number of ports used for remote output via network I/F card	64	0 ~ 256	256	Multiple of 16

I/O1 through I/O4 indicate slot numbers.

b. Use the expansion I/O board IA-103-X-32 (32 input points, 16 output points) for standard I/O ports, and assign 256 input points and 256 output points to the DeviceNet board as general-purpose I/O ports. The same settings apply to J-type controllers.

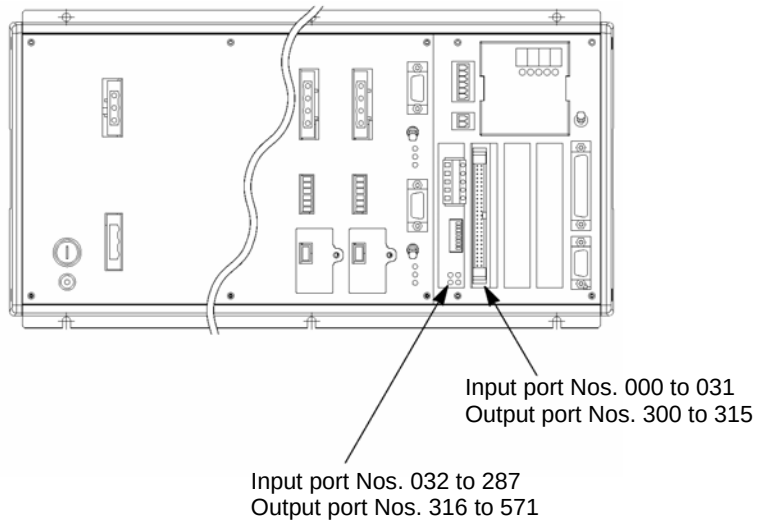

I/O parameters for X-SEL J/K types

No.	Parameter name	Default value (reference)	Input range	Setting	Remarks
1	I/O port assignment type	0	0 ~ 20	0	0: Fixed assignment 1: Automatic assignment (Priority: Assigned from slot 1) * Ports are assigned consecutively only for slots where a board is physically installed, starting from slot 1, for safety reasons.
2	Input port start number for standard I/O based on fixed assignment (I/O1)	000	-1 ~ 599	032	0 + (multiple of 8) (Invalid, if a value is entered with a negative sign.)
3	Output port start number for standard I/O based on fixed assignment (I/O1)	300	-1 ~ 599	316	300 + (multiple of 8) (Invalid, if a value is entered with a negative sign.)
4	Input port start number for expansion I/O1 based on fixed assignment (I/O2)	-1	-1 ~ 599	000	0 + (multiple of 8) (Invalid, if a value is entered with a negative sign.) (Slot immediately next to the standard I/O slot)
5	Output port start number for expansion I/O1 based on fixed assignment (I/O2)	-1	-1 ~ 599	300	300 + (multiple of 8) (Invalid, if a value is entered with a negative sign.)
6	Input port start number for expansion I/O2 based on fixed assignment (I/O3)	-1	-1 ~ 599	-1	0 + (multiple of 8) (Invalid, if a value is entered with a negative sign.)
7	Output port start number for expansion I/O2 based on fixed assignment (I/O3)	-1	-1 ~ 599	-1	300 + (multiple of 8) (Invalid, if a value is entered with a negative sign.)
8	Input port start number for expansion I/O3 based on fixed assignment (I/O4)	-1	-1 ~ 599	-1	0 + (multiple of 8) (Invalid, if a value is entered with a negative sign.)
9	Output port start number for expansion I/O3 based on fixed assignment (I/O4)	-1	-1 ~ 599	-1	300 + (multiple of 8) (Invalid, if a value is entered with a negative sign.)
10	Error monitor for standard I/O (I/O1)	2	0 ~ 5	2	0: Do not monitor 1: Monitor 2: Monitor (Do not monitor 24-V I/O power supply errors) (Main application version 0.55 or later) 3: Monitor (Monitor 24-V I/O power supply errors only)
11	Error monitor for expansion I/O1 (I/O2)	1	0 ~ 5	1	
12	Error monitor for standard I/O2 (I/O3)	0	0 ~ 5	0	
13	Error monitor for expansion I/O3 (I/O4)	0	0 ~ 5	0	
14	Number of ports used for remote input via network I/F card	64	0 ~ 256	256	Multiple of 8
15	Number of ports used for remote output via network I/F card	64	0 ~ 256	256	Multiple of 8

I/O1 through I/O4 indicate slot numbers.

2.5.2 Setting Example for P/Q Types

(1) Setting example when only a DeviceNet board is installed

Assign 32 input points and 16 output points to the DeviceNet board from the first standard I/O port, as you would for the standard X-SEL I/O board (50-pin connector), and do not use any other I/O port.

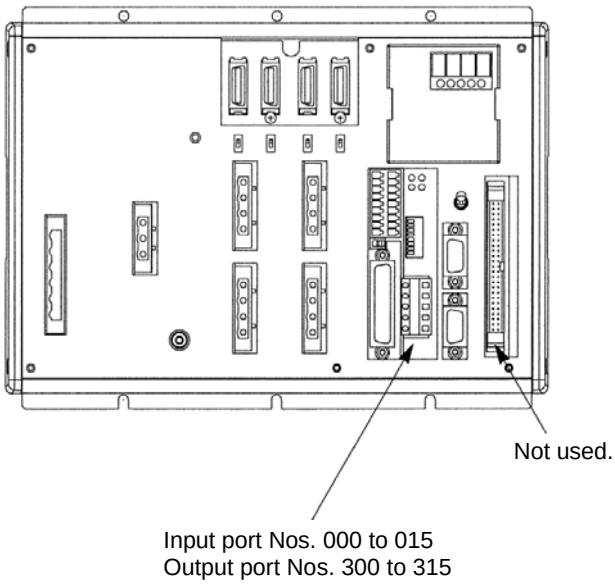

I/O parameters for X-SEL P/Q types

No.	Parameter name	Default value (reference)	Input range	Setting	Remarks
1	I/O port assignment type	0	0 ~ 20	0	0: Fixed assignment 1: Automatic assignment (Priority: Assigned from slot 1) * Ports are assigned consecutively only for slots where a board is physically installed, starting from slot 1, for safety reasons.
2	Input port start number for standard I/O based on fixed assignment (I/O1)	-1	-1 ~ 599	-1	0 + (multiple of 8) (Invalid, if a value is entered with a negative sign.)
3	Output port start number for standard I/O based on fixed assignment (I/O1)	-1	-1 ~ 599	-1	300 + (multiple of 8) (Invalid, if a value is entered with a negative sign.)
4	Input port start number for expansion I/O1 based on fixed assignment (I/O2)	-1	-1 ~ 599	-1	0 + (multiple of 8) (Invalid, if a value is entered with a negative sign.) (Slot immediately next to the standard I/O slot)
5	Output port start number for expansion I/O1 based on fixed assignment (I/O2)	-1	-1 ~ 599	-1	300 + (multiple of 8) (Invalid, if a value is entered with a negative sign.)
6	Input port start number for expansion I/O2 based on fixed assignment (I/O3)	-1	-1 ~ 599	-1	0 + (multiple of 8) (Invalid, if a value is entered with a negative sign.)
7	Output port start number for expansion I/O2 based on fixed assignment (I/O3)	-1	-1 ~ 599	-1	300 + (multiple of 8) (Invalid, if a value is entered with a negative sign.)
8	Input port start number for expansion I/O3 based on fixed assignment (I/O4)	-1	-1 ~ 599	-1	0 + (multiple of 8) (Invalid, if a value is entered with a negative sign.)
9	Output port start number for expansion I/O3 based on fixed assignment (I/O4)	-1	-1 ~ 599	-1	300 + (multiple of 8) (Invalid, if a value is entered with a negative sign.)
10	Error monitor for standard I/O (I/O1)	0	0 ~ 5	0	0: Do not monitor 1: Monitor 2: Monitor (Do not monitor 24-V I/O power supply errors) (Main application version 0.55 or later) 3: Monitor (Monitor 24-V I/O power supply errors only) (Main application version 0.55 or later)
11	Error monitor for expansion I/O1 (I/O2)	0	0 ~ 5	0	
12	Error monitor for standard I/O2 (I/O3)	0	0 ~ 5	0	
13	Error monitor for expansion I/O3 (I/O4)	0	0 ~ 5	0	
14	Number of ports used for remote input via network I/F card	64	0 ~ 256	32	Multiple of 8
15	Number of ports used for remote output via network I/F card	64	0 ~ 256	16	Multiple of 8
16	Input port start number for network I/F module based on fixed assignment	0	-1 ~ 599	0	0 + (multiple of 8) (Invalid, if a value is entered with a negative sign.)
17	Output port start number for network I/F module based on fixed assignment	300	-1 ~ 599	300	300 + (multiple of 8) (Invalid, if a value is entered with a negative sign.)
18	Error monitor for network I/F module	1	0 ~ 5	1	0: Do not monitor 1: Monitor * Some exceptions apply.

I/O1 through I/O4 indicate slot numbers.

(2) Setting example when a DeviceNet board is used together with a standard I/O board

a. Assign 256 input points and 256 output points to the DeviceNet board from the first standard I/O port, and assign the subsequent I/O port numbers to the standard I/O board.

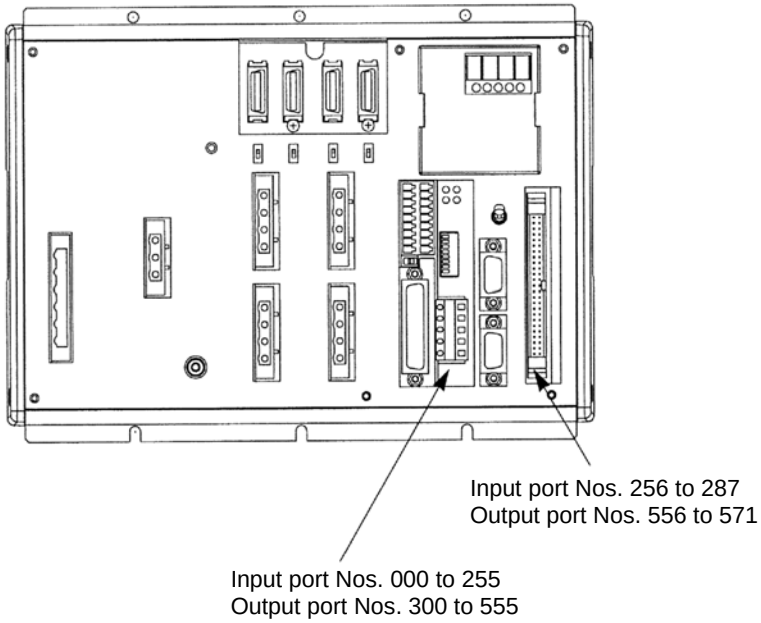

I/O parameters for X-SEL P/Q types

No.	Parameter name	Default value (reference)	Input range	Setting	Remarks
1	I/O port assignment type	0	0 ~ 20	0	0: Fixed assignment 1: Automatic assignment (Priority: Assigned from slot 1) * Ports are assigned consecutively only for slots where a board is physically installed, starting from slot 1, for safety reasons.
2	Input port start number for standard I/O based on fixed assignment (I/O1)	-1	-1 ~ 599	256	0 + (multiple of 8) (Invalid, if a value is entered with a negative sign.)
3	Output port start number for standard I/O based on fixed assignment (I/O1)	-1	-1 ~ 599	256	300 + (multiple of 8) (Invalid, if a value is entered with a negative sign.)
4	Input port start number for expansion I/O1 based on fixed assignment (I/O2)	-1	-1 ~ 599	-1	0 + (multiple of 8) (Invalid, if a value is entered with a negative sign.) (Slot immediately next to the standard I/O slot)
5	Output port start number for expansion I/O1 based on fixed assignment (I/O2)	-1	-1 ~ 599	-1	300 + (multiple of 8) (Invalid, if a value is entered with a negative sign.)
6	Input port start number for expansion I/O2 based on fixed assignment (I/O3)	-1	-1 ~ 599	-1	0 + (multiple of 8) (Invalid, if a value is entered with a negative sign.)
7	Output port start number for expansion I/O2 based on fixed assignment (I/O3)	-1	-1 ~ 599	-1	300 + (multiple of 8) (Invalid, if a value is entered with a negative sign.)
8	Input port start number for expansion I/O3 based on fixed assignment (I/O4)	-1	-1 ~ 599	-1	0 + (multiple of 8) (Invalid, if a value is entered with a negative sign.)
9	Output port start number for expansion I/O3 based on fixed assignment (I/O4)	-1	-1 ~ 599	-1	300 + (multiple of 8) (Invalid, if a value is entered with a negative sign.)
10	Error monitor for standard I/O (I/O1)	0	0 ~ 5	1	0: Do not monitor 1: Monitor 2: Monitor (Do not monitor 24-V I/O power supply errors) (Main application version 0.55 or later) 3: Monitor (Monitor 24-V I/O power supply errors only)
11	Error monitor for expansion I/O1 (I/O2)	0	0 ~ 5	0	
12	Error monitor for standard I/O2 (I/O3)	0	0 ~ 5	0	
13	Error monitor for expansion I/O3 (I/O4)	0	0 ~ 5	0	
14	Number of ports used for remote input via network I/F card	64	0 ~ 256	256	Multiple of 16
15	Number of ports used for remote output via network I/F card	64	0 ~ 256	256	Multiple of 16
16	Input port start number for network I/F module based on fixed assignment	0	-1 ~ 599	0	0 + (multiple of 8) (Invalid, if a value is entered with a negative sign.)
17	Output port start number for network I/F module based on fixed assignment	300	-1 ~ 599	300	300 + (multiple of 8) (Invalid, if a value is entered with a negative sign.)
18	Error monitor for network I/F module	1	0 ~ 5	1	0: Do not monitor 1: Monitor * Some exceptions apply.

I/O1 through I/O4 indicate slot numbers.

b. Use the standard I/O board IA-103-X-32 (32 input points, 16 output points) for standard I/O ports, and assign 256 input points and 256 output points to the DeviceNet board as general-purpose I/O ports. The same settings apply to J-type controllers.

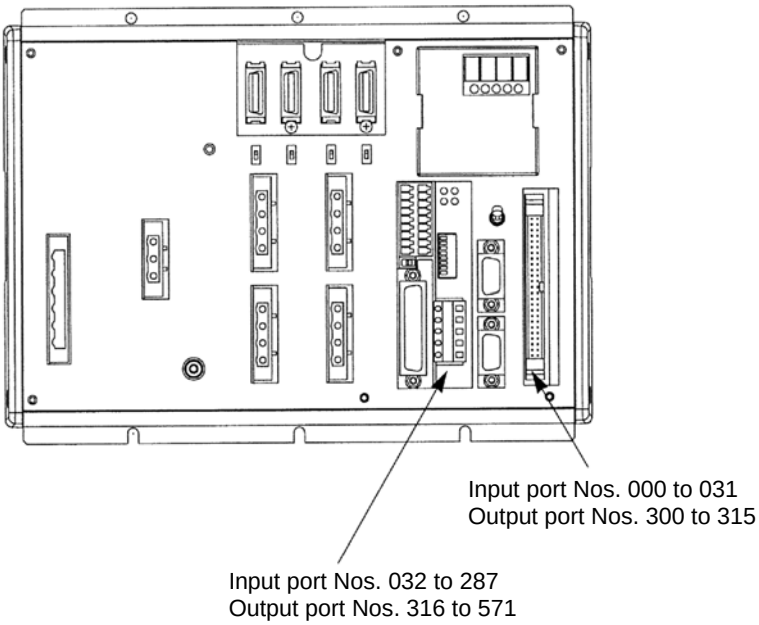

I/O parameters for X-SEL P/Q types

No.	Parameter name	Default value (reference)	Input range	Setting	Remarks
1	I/O port assignment type	0	0 ~ 20	0	0: Fixed assignment 1: Automatic assignment (Priority: Assigned from slot 1) * Ports are assigned consecutively only for slots where a board is physically installed, starting from slot 1, for safety reasons.
2	Input port start number for standard I/O based on fixed assignment (I/O1)	-1	-1 ~ 599	000	0 + (multiple of 8) (Invalid, if a value is entered with a negative sign.)
3	Output port start number for standard I/O based on fixed assignment (I/O1)	-1	-1 ~ 599	300	300 + (multiple of 8) (Invalid, if a value is entered with a negative sign.)
4	Input port start number for expansion I/O1 based on fixed assignment (I/O2)	-1	-1 ~ 599	-1	0 + (multiple of 8) (Invalid, if a value is entered with a negative sign.) (Slot immediately next to the standard I/O slot)
5	Output port start number for expansion I/O1 based on fixed assignment (I/O2)	-1	-1 ~ 599	-1	300 + (multiple of 8) (Invalid, if a value is entered with a negative sign.)
6	Input port start number for expansion I/O2 based on fixed assignment (I/O3)	-1	-1 ~ 599	-1	0 + (multiple of 8) (Invalid, if a value is entered with a negative sign.)
7	Output port start number for expansion I/O2 based on fixed assignment (I/O3)	-1	-1 ~ 599	-1	300 + (multiple of 8) (Invalid, if a value is entered with a negative sign.)
8	Input port start number for expansion I/O3 based on fixed assignment (I/O4)	-1	-1 ~ 599	-1	0 + (multiple of 8) (Invalid, if a value is entered with a negative sign.)
9	Output port start number for expansion I/O3 based on fixed assignment (I/O4)	-1	-1 ~ 599	-1	300 + (multiple of 8) (Invalid, if a value is entered with a negative sign.)
10	Error monitor for standard I/O (I/O1)	0	0 ~ 5	1	0: Do not monitor 1: Monitor 2: Monitor (Do not monitor 24-V I/O power supply errors) (Main application version 0.55 or later) 3: Monitor (Monitor 24-V I/O power supply errors only) (Main application version 0.55 or later)
11	Error monitor for expansion I/O1 (I/O2)	0	0 ~ 5	0	
12	Error monitor for standard I/O2 (I/O3)	0	0 ~ 5	0	
13	Error monitor for expansion I/O3 (I/O4)	0	0 ~ 5	0	
14	Number of ports used for remote input via network I/F card	64	0 ~ 256	256	Multiple of 8
15	Number of ports used for remote output via network I/F card	64	0 ~ 256	256	Multiple of 8
16	Input port start number for network I/F module based on fixed assignment	0	-1 ~ 599	032	0 + (multiple of 8) (Invalid, if a value is entered with a negative sign.)
17	Output port start number for network I/F module based on fixed assignment	300	-1 ~ 599	316	300 + (multiple of 8) (Invalid, if a value is entered with a negative sign.)
18	Error monitor for network I/F module	1	0 ~ 5	1	0: Do not monitor 1: Monitor * Some exceptions apply.

I/O1 through I/O4 indicate slot numbers.

2.6 I/O Port Numbers for X-SEL

The table below lists the standard I/O port numbers for X-SEL controllers.
On X-SEL controllers, port numbers and function assignments can be changed using I/O parameters. (For details, refer to the “Operation Manual for X-SEL Controller.”)

	Port No.	Function		Port No.	Function
Input	000	Program start	Output	300	Alarm output
	001	General-purpose input		301	Ready output
	002	General-purpose input		302	Emergency stop output
	003	General-purpose input		303	General-purpose output
	004	General-purpose input		304	General-purpose output
	005	General-purpose input		305	General-purpose output
	006	General-purpose input		306	General-purpose output
	007	Program specification (PRG No. 1)		307	General-purpose output
	008	Program specification (PRG No. 2)		308	General-purpose output
	009	Program specification (PRG No. 4)		309	General-purpose output
	010	Program specification (PRG No. 8)		310	General-purpose output
	011	Program specification (PRG No. 10)		311	General-purpose output
	012	Program specification (PRG No. 20)		312	General-purpose output
	013	Program specification (PRG No. 40)		313	General-purpose output
	014	General-purpose input		314	General-purpose output
	015	General-purpose input		315	General-purpose output
	⋮	⋮		⋮	⋮

(Note) The numbers of I/O ports are as follows:

Inputs: 000 to 299 (maximum of 300 points)
Outputs: 300 to 599 (maximum of 300 points)

If DeviceNet and expansion I/O boards are used together, pay attention to the numbers of I/O ports.

Reference

Port numbers are assigned to bit addresses in the PLC in units of 16 points, starting from the channel corresponding to the node address set with the DIP switches.
(This does not apply if a configurator is used to assign port numbers.)

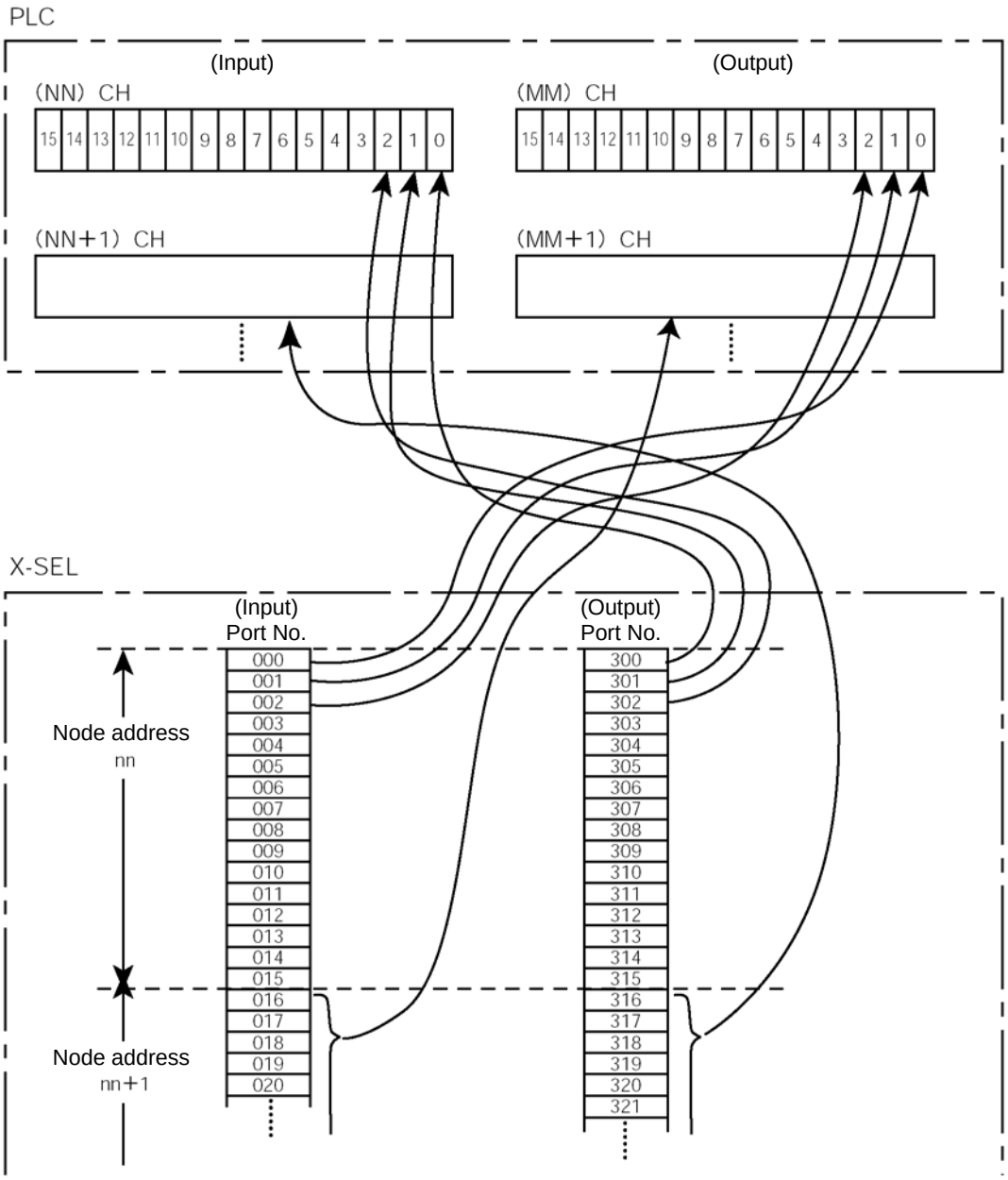

(NN) CH and (MM) CH as indicated above represent PLC channel addresses corresponding to node address nn.
As for nn, nn+1, nn+2, etc., bit addresses corresponding to each node address are occupied in accordance with the numbers of I/O points used. Accordingly, exercise caution to prevent node address duplication.

3. Tabletop Robot TT

3.1 Model

Model: TT-□-I-□-PV
Maximum numbers of network I/O points: 240/240

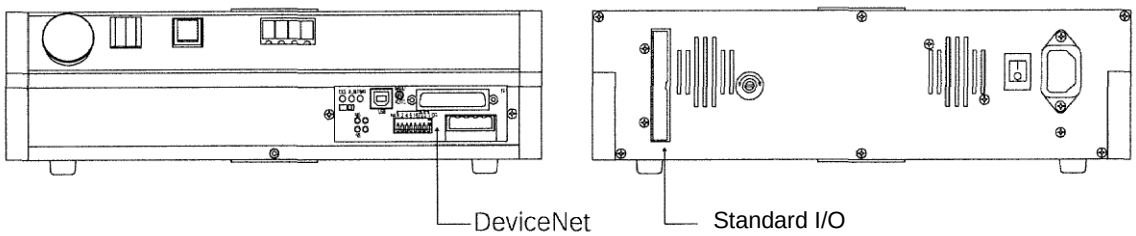

A DeviceNet board is installed in the installation position of field network board.

3.2 Interface Specifications

The DeviceNet interface specifications are summarized below.

<table>
<tr><th>Item</th><th colspan="4">Specification</th></tr>
<tr><td rowspan="3">Communication protocol</td><td colspan="4">A certified DeviceNet 2.0 interface module is used (certification pending).</td></tr>
<tr><td colspan="4">Group 2 only server</td></tr>
<tr><td colspan="4">Network-powered insulation node</td></tr>
<tr><td rowspan="3">Communication specification</td><td colspan="2" rowspan="3">Master-slave connection</td><td colspan="2">Bit strobe</td></tr>
<tr><td colspan="2">Polling</td></tr>
<tr><td colspan="2">Cyclic</td></tr>
<tr><td>Baud rate</td><td colspan="4">500 k / 250 k / 125 kbps (selectable by DIP switches)</td></tr>
<tr><td rowspan="5">Communication cable length</td><td>Baud rate</td><td>Maximum network length</td><td>Maximum branch line length</td><td>Total branch line length</td></tr>
<tr><td>500 kbps</td><td>100 m</td><td rowspan="3">6 m</td><td>39 m</td></tr>
<tr><td>250 kbps</td><td>250 m</td><td>78 m</td></tr>
<tr><td>125 kbps</td><td>500 m</td><td>156 m</td></tr>
<tr><td colspan="4">Note) When a large-size DeviceNet cable is used.</td></tr>
<tr><td>Communication power supply</td><td colspan="4">24 VDC (supplied from DeviceNet)</td></tr>
<tr><td>Consumption current of communication power supply</td><td colspan="4">60 mA</td></tr>
<tr><td>Number of occupied nodes</td><td colspan="4">1 node</td></tr>
<tr><td>Connector</td><td colspan="4">MSTBA2.5/5-G-5.08AU M (*1) by Phoenix Contact</td></tr>
</table>

(*1) The cable-end connector is a standard accessory.
SMSTB2.5/5-ST-5.08AU by Phoenix Contact

3.3 DeviceNet board

3.3.1 Name of Each Part

TT type

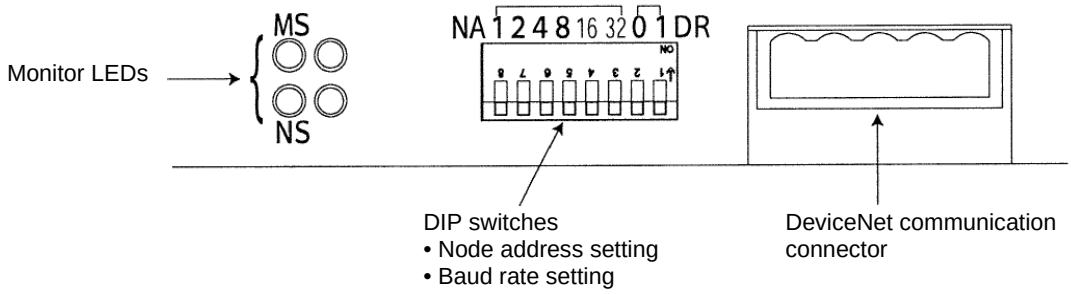

3.3.2 DIP Switch Settings

The DIP switches are used to set the following items:

(1) Node address
(2) Baud rate
(Note) Turn off the X-SEL power before setting the DIP switches.

(1) Setting the node address (MAC ID)

Set the node address (MAC ID) using a hexadecimal value according to the table below.

1: ON 0: OFF

Node address (MAC ID)	DIP switches					
	NA32	NA16	NA8	NA4	NA2	NA1
0	0	0	0	0	0	0
1	0	0	0	0	0	1
2	0	0	0	0	1	0
3	0	0	0	0	1	1
⋮	⋮	⋮	⋮	⋮	⋮	⋮
60	1	1	1	1	0	0
61	1	1	1	1	0	1
62	1	1	1	1	1	0
63	1	1	1	1	1	1

(Note) The node address corresponds to the remote I/O address in the PLC. This DeviceNet card supports a maximum of 240 input points and 240 output points. Accordingly, the node address corresponding to the I/O points used will be occupied in the PLC.
Take note that all node addresses must be unique.
(For details, refer to the operation manual for the PLC.)

(2) Setting the baud rate

Set the baud rate according to the table below.

1: ON 0: OFF

Baud rate	DIP switches	
	DR1	DR0
125 kbps	0	0
250 kbps	0	1
500 kbps	1	0
Setting prohibited	1	1

3.3.3 Monitor LED Indicators

The two LEDs, MS and NS, provided on the front panel of the board are used to check the board (node) condition and network condition. (The remaining two LEDs are not currently used.)
The LEDs illuminate in two colors (red and green), and you can monitor the conditions listed in the table below based on the illumination status and color of each LED.

MS (Module Status) LED: Condition of the board (node) itself
NA (Network Status) LED: Condition of the network

LED	Color	Illumination status	Description (meaning)
MS	Green	Steady light	The board is operating normally.
	Red	Steady light	A hardware error occurred. The board must be replaced.
		Blinking	A minor error occurred, such as a DIP switch setting error or configuration error. The error can be reset by, for example, reconfiguring the applicable setting.
	-	Off	Power is not supplied from the TT robot. The TT robot must be repaired or the board must be replaced.
NS	Green	Steady light	Network connection has been established and the board is communicating normally.
		Blinking	The board is online, but network connection is not yet established. Communication is stopped. (The network is normal.)
	Red	Steady light	Node address duplication or bus-off state was detected. Communication is not possible.
		Blinking	A communication error occurred (communication time-out occurred).
	-	Off	• The board is not online. • DeviceNet power is not supplied.

Self test is performed when the power is turned on.
During the test, the monitor LEDs cycle in the following sequence:
[1] NS turns off.
[2] MS illuminates in steady green (approx. 0.25 second).
[3] MS illuminates in steady red (approx. 0.25 second).
[4] MS illuminates in steady green.
[5] NS illuminates in steady green (approx. 0.25 second).
[6] NS illuminates in steady red (approx. 0.25 second).
[7] NS turns off.
When the self test is finished and the board starts communicating normally, both the MS and NS LEDs change to steady green.

3.4 Setting of I/O Parameters (Assignment of I/O Ports)

Set the TT I/O ports to be used in DeviceNet communication.

(1) Board Installation Position (Slot) and I/O Parameter Numbers

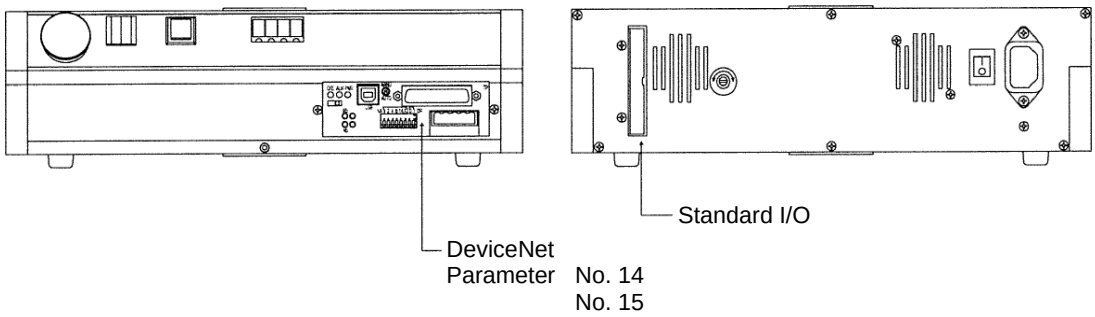

TT robots are shipped with the input ports and output ports used in DeviceNet communication both set to 64 points.

(2) Factory-set parameters for TT type

No.	Parameter name	Input range	Setting	Remarks
1	I/O port assignment type	0	Reference only	0: Fixed assignment
2	Input port start number for standard I/O1 based on fixed assignment	000	Reference only	0 + (multiple of 8) (Invalid, if a value is entered with a negative sign.)
3	Output port start number for standard I/O1 based on fixed assignment	300	Reference only	300 + (multiple of 8) (Invalid, if a value is entered with a negative sign.)
4	Input port start number for standard I/O2 based on fixed assignment	32	Reference only	0 + (multiple of 8) (Invalid, if a value is entered with a negative sign.)
5	Output port start number for standard I/O2 based on fixed assignment	316	Reference only	300 + (multiple of 8) (Invalid, if a value is entered with a negative sign.)
6	Input port start number for expansion I/O1 based on fixed assignment (Network I/F module)	48	-1 ~ 599	0 + (multiple of 8) (Invalid, if a value is entered with a negative sign.)
7	Output port start number for expansion I/O1 based on fixed assignment (Network I/F module)	348	-1 ~ 599	300 + (multiple of 8) (Invalid, if a value is entered with a negative sign.)
8	Reserved by the system	-1	-1 ~ 599	
9	Reserved by the system	-1	-1 ~ 599	
10	Error monitor for standard I/O1	0	0 ~ 5	0: Do not monitor 1: Monitor 2: Monitor (Do not monitor 24-V I/O power supply errors) 3: Monitor (Monitor 24-V I/O power supply errors only) * Some exceptions apply.
11	Error monitor for standard I/O2	0	0 ~ 5	0: Do not monitor 1: Monitor 2: Monitor (Do not monitor 24-V I/O power supply errors) 3: Monitor (Monitor 24-V I/O power supply errors only) * Some exceptions apply.
12	Error monitor for expansion I/O1 (Network I/F module)	1	0 ~ 5	0: Do not monitor 1: Monitor * Some exceptions apply.
13	Reserved by the system	1	0 ~ 5	
14	Number of ports used for remote input via network I/F card	64	0 ~ 240	Multiple of 16
15	Number of ports used for remote output via network I/F card	64	0 ~ 240	Multiple of 16

On TT robots, the numbers of available DeviceNet ports can be changed using applicable parameters.
The DeviceNet I/O port start numbers are fixed.
DeviceNet input port start No. 48
DeviceNet output port start No. 348

The I/O port numbers for standard I/Os (connected via the rear panel I/O connector) are fixed.
Standard input port Nos. 16 to 31
Standard output port Nos. 316 to 331

(3) Parameter setting example for tabletop robot TT

Assign 240 input points and 240 output points to the DeviceNet as general-purpose I/O ports.
On TT robots, the I/O port start numbers are fixed.
Input port start No. 48
Output port start No. 348
Port are assigned in units of 16 points. Since the port start numbers are fixed, the maximum numbers of input points and output points are set to 240, respectively.
Accordingly, set “240” in I/O Parameter Nos. 14 and 15.

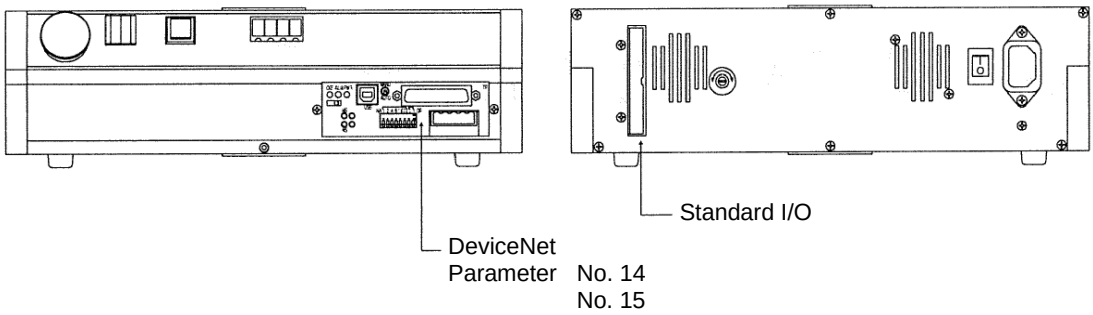

I/O parameters for TT type

No.	Parameter name	Default value	Input range	Setting	Remarks
1	I/O port assignment type	0	Reference only	0	0: Fixed assignment
2	Input port start number for standard I/O1 based on fixed assignment	000	Reference only	000	0 + (multiple of 8) (Invalid, if a value is entered with a negative sign.)
3	Output port start number for standard I/O1 based on fixed assignment	300	Reference only	300	300 + (multiple of 8) (Invalid, if a value is entered with a negative sign.)
4	Input port start number for standard I/O2 based on fixed assignment	32	Reference only	32	0 + (multiple of 8) (Invalid, if a value is entered with a negative sign.)
5	Output port start number for standard I/O2 based on fixed assignment	316	Reference only	316	300 + (multiple of 8) (Invalid, if a value is entered with a negative sign.)
6	Input port start number for expansion I/O1 based on fixed assignment (Network I/F module)	48	-1 ~ 599	48	0 + (multiple of 8) (Invalid, if a value is entered with a negative sign.)
7	Output port start number for expansion I/O1 based on fixed assignment (Network I/F module)	348	-1 ~ 599	348	300 + (multiple of 8) (Invalid, if a value is entered with a negative sign.)
8	Reserved by the system	-1	-1 ~ 599	-1	
9	Reserved by the system	-1	-1 ~ 599	-1	
10	Error monitor for standard I/O1	0	0 ~ 5	0	0: Do not monitor 1: Monitor 2: Monitor (Do not monitor 24-V I/O power supply errors) 3: Monitor (Monitor 24-V I/O power supply errors only) * Some exceptions apply.
11	Error monitor for standard I/O2	0	0 ~ 5	0	0: Do not monitor 1: Monitor 2: Monitor (Do not monitor 24-V I/O power supply errors) 3: Monitor (Monitor 24-V I/O power supply errors only) * Some exceptions apply.
12	Error monitor for expansion I/O1 (Network I/F module)	1	0 ~ 5	1	0: Do not monitor 1: Monitor * Some exceptions apply.
13	Reserved by the system	1	0 ~ 5	1	
14	Number of ports used for remote input via network I/F card	64	0 ~ 240	240	Multiple of 16
15	Number of ports used for remote output via network I/F card	64	0 ~ 240	240	Multiple of 16

3.5 I/O Port Numbers for TT Robots

The table below lists the I/O port numbers for TT robots.
(For details, refer to the “Controller Operation Manual for Tabletop Robot TT.”)

	Port No.	Function		Port No.	Function
Internal DI	000	Start	Internal DO	300	ALM (front panel LED)
	001	(Soft reset)		301	RDY (front panel LED)
	002	(Servo on)		302	EMG (front panel LED)
	003	(Start via auto start)		303	Auto mode
	004	(Soft interlock)		304	HPS (front panel LED)
	005	(Pause release)		305	Reserved by the system
	006	(Pause)		306	Reserved by the system
	007	Digital program number specification switch for ones’ place		307	Reserved by the system
	008			308	Internal DI-No. 001 ON/OFF
	009			309	Internal DI-No. 002 ON/OFF
	010			310	Internal DI-No. 003 ON/OFF
	011	Digital program number specification switch for tens’ place		311	Internal DI-No. 004 ON/OFF
	012			312	Internal DI-No. 005 ON/OFF
	013			313	Internal DI-No. 006 ON/OFF
	014	(Drive-source cutoff input)		314	Internal DI-No. 014 ON/OFF
	015	(Home return, etc.)		315	Internal DI-No. 015 ON/OFF
External DI	016 ~ 031	General-purpose input (rear panel I/O connector)	External DO	316 ~ 331	General-purpose output (rear panel I/O connector)
Internal DI	032	Reserved by the system	Internal DO	332	Specification for 7-segment user display digits
	033			333	Specification for 7-segment user display digits
	034			334	Reserved by the system
	035			335	Reserved by the system
	036			336	Reserved by the system
	037			337	7-segment display refresh
	038			338	7-segment user display/system display switching
	039			339	Specification for 7-segment user display
	040			340	DT0 (7-segment user display bit)
	041			341	DT1 (7-segment user display bit)
	042			342	DT2 (7-segment user display bit)
	043			343	DT3 (7-segment user display bit)
	044			344	DT4 (7-segment user display bit)
	045			345	DT5 (7-segment user display bit)
	046			346	DT6 (7-segment user display bit)
	047			347	Reserved by the system

External DI	048 ~ 287	For DeviceNet	External DO	348 ~ 587	For DeviceNet

Reference

Port numbers are assigned to bit addresses in the PLC in units of 16 points, starting from the channel corresponding to the node address set with the DIP switches.
(This does not apply if a configurator is used to assign port numbers.)

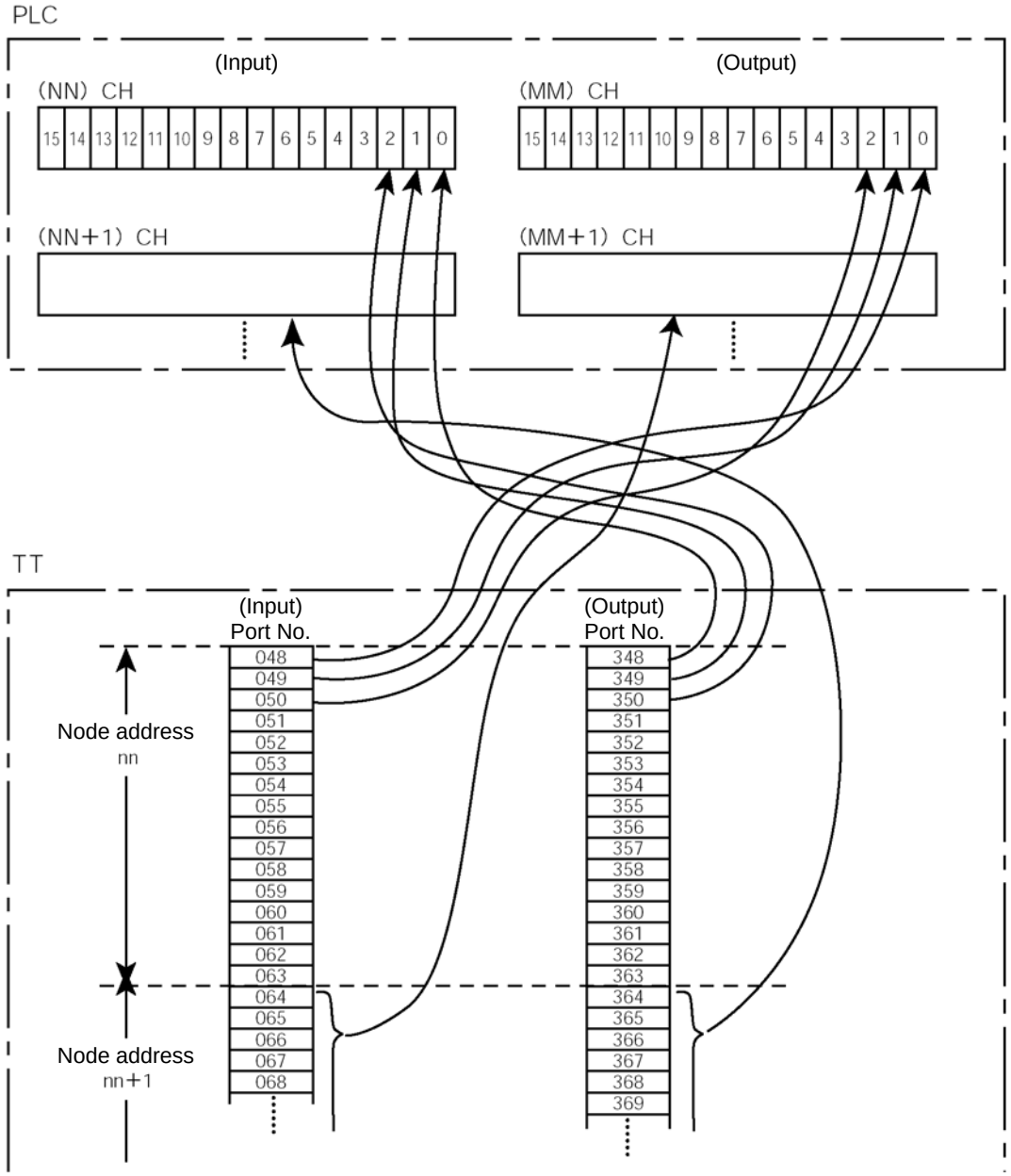

(NN) CH and (MM) CH as indicated above represent PLC channel addresses corresponding to node address nn.
As for nn, nn+1, nn+2, etc., bit addresses corresponding to each node address are occupied in accordance with the numbers of I/O points used. Accordingly, exercise caution to prevent node address duplication.

4. RCS-C and E-Con

4.1 Model

DeviceNet-ready RCS-C and E-Con controllers are shown below.

(1) RCS-C

Model: RCS-C-□-DV-□-□
Number of I/O points: 8 dedicated input points, 10 dedicated output points

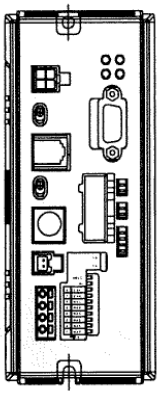

24-V type

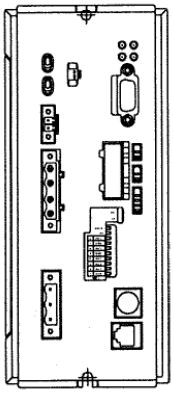

100-V/200-V types

(2) E-Con

Model: ECON-□-□-DV-□-□
Number of I/O points: 10 dedicated input points, 12 dedicated output points

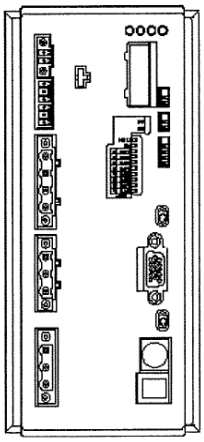

4.2 Interface Specifications

<table>
<tr><th>Item</th><th colspan="4">Specification</th></tr>
<tr><td rowspan="3">Communication protocol</td><td colspan="4">DeviceNet 2.0 (*1)</td></tr>
<tr><td colspan="4">Group 2 only server</td></tr>
<tr><td colspan="4">Network-powered insulation node</td></tr>
<tr><td rowspan="2">Support connection</td><td colspan="2" rowspan="2">Master-slave connection</td><td colspan="2">Bit strobe</td></tr>
<tr><td colspan="2">Polling</td></tr>
<tr><td>Baud rate</td><td colspan="4">500 k / 250 k / 125 kbps (selectable by DIP switches)</td></tr>
<tr><td rowspan="5">Communication cable length</td><td>Baud rate</td><td>Maximum network length</td><td>Maximum branch line length</td><td>Total branch line length</td></tr>
<tr><td>500 kbps</td><td>100 m</td><td rowspan="3">6 m</td><td>39 m</td></tr>
<tr><td>250 kbps</td><td>250 m</td><td>78 m</td></tr>
<tr><td>125 kbps</td><td>500 m</td><td>156 m</td></tr>
<tr><td colspan="4">Note) When a large-size DeviceNet cable is used.</td></tr>
<tr><td>Communication power supply</td><td colspan="4">24 VDC (supplied from DeviceNet)</td></tr>
<tr><td>Consumption current of communication power supply</td><td colspan="4">60 mA</td></tr>
<tr><td>Number of occupied nodes</td><td colspan="4">1 node</td></tr>
<tr><td>Connector</td><td colspan="4">MSTBA2.5/5-G-5.08AU M (*2) by Phoenix Contact</td></tr>
</table>

(*1) RCS-C controllers are already certified (test version 15).
Certification is pending for E-Con controllers.
(*2) The cable-end connector is a standard accessory.
SMSTB2.5/5-ST-5.08AU by Phoenix Contact

4.3 DeviceNet Interface

4.3.1 Name of Each Part

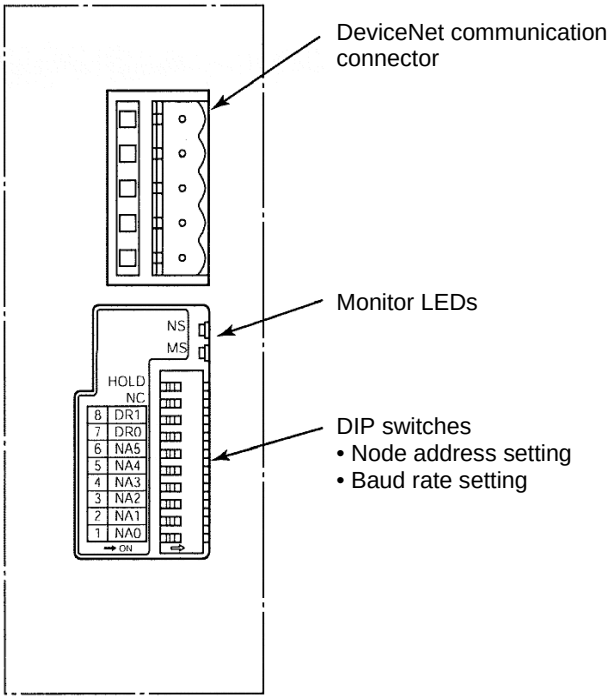

4.3.2 DIP Switch Settings

The DIP switches are used to set the following items:

(1) Node address
(2) Baud rate
(Note) Turn off the X-SEL power before setting the DIP switches.

(1) Setting the node address (MAC ID)

Set the node address (MAC ID) using a hexadecimal value according to the table below.

1: ON 0: OFF

	DIP switches					
Node address (MAC ID)	NA5	NA4	NA3	NA2	NA1	NA0
0	0	0	0	0	0	0
1	0	0	0	0	0	1
2	0	0	0	0	1	0
3	0	0	0	0	1	1
⋮	⋮	⋮	⋮	⋮	⋮	⋮
60	1	1	1	1	0	0
61	1	1	1	1	0	1
62	1	1	1	1	1	0
63	1	1	1	1	1	1

(Note) The node address corresponds to the remote I/O address in the PLC. (For details, refer to the operation manual for the PLC.)

(2) Setting the baud rate

Set the baud rate according to the table below.

1: ON 0: OFF

	DIP switches	
Baud rate	DR1	DR0
125 kbps	0	0
250 kbps	0	1
500 kbps	1	0
Setting prohibited	1	1

4.3.3 Monitor LED Indicators

The two LEDs, MS and NS, provided on the front panel of the controller are used to check the interface (node) condition and network condition.
The LEDs illuminate in two colors (red and green), and you can monitor the conditions listed in the table below based on the illumination status and color of each LED.

MS (Module Status) LED: Condition of the interface (node) itself
NS (Network Status) LED: Condition of the network

LED	Color	Illumination status	Description (meaning)
MS	Green	Steady light	The board is operating normally.
	Red	Steady light	A hardware error occurred. The controller must be repaired.
		Blinking	A minor error occurred, such as a DIP switch setting error or configuration error. The error can be reset by, for example, reconfiguring the applicable setting.
	-	Off	Power is not supplied from the X-SEL controller. The X-SEL controller must be repaired or the board must be replaced.
NS	Green	Steady light	Network connection has been established and the board is communicating normally.
		Blinking	The board is online, but network connection is not yet established. Communication is stopped. (The network is normal.)
	Red	Steady light	Node address duplication or bus-off state was detected. Communication is not possible.
		Blinking	A communication error occurred (communication time-out occurred).
	-	Off	• The board is not online. • DeviceNet power is not supplied.

Self test is performed when the power is turned on.
During the test, the monitor LEDs cycle in the following sequence:
[1] NS turns off.
[2] MS illuminates in steady green (approx. 0.25 second).
[3] MS illuminates in steady red (approx. 0.25 second).
[4] MS illuminates in steady green.
[5] NS illuminates in steady green (approx. 0.25 second).
[6] NS illuminates in steady red (approx. 0.25 second).
[7] NS turns off.
When the self test is finished and the board starts communicating normally, both the MS and NS LEDs change to steady green.

4.4 Input/Output (I/O)

The I/O specifications of RCS-C and E-Con controllers are as follows:
(1) RCS-C: 8 dedicated input points, 10 dedicated output points
(2) E-Con: 10 dedicated input points, 12 dedicated output points
The details are explained below.

(For details on each signal, refer to the "Operation Manual for RCS Series ROBO Cylinder Controller, RCS-C Type" or "Operation Manual for E-Con Controller.")

(1) RCS-C signal assignments

8-bit input		10-bit output	
Input No.	Signal name	Output No.	Signal name
0	Command position 1	0	Completed position 1
1	Command position 2	1	Completed position 2
2	Command position 4	2	Completed position 4
3	Command position 8	3	Completed position 8
4	Start	4	Positioning complete
5	Reset	5	Home return complete
6	Servo on	6	Zone
7	*Pause	7	*Alarm
8	Not used	8	*Emergency stop
9	Not used	9	Moving
10	Not used	10	*Battery alarm (Note 1)
11	Not used	11	Not used (Note 2)
12	Not used	12	Not used
13	Not used	13	Not used
14	Not used	14	Not used
15	Not used	15	Not used

The signals denoted by * are always ON.
(Note 1) This signal is available only on controllers that operate on a mains voltage of 100 or 200 V. The ON/OFF state of the signal is indeterminable on 24-VDC controllers.
(Note 2) The ON/OFF state of signals denoted by "Not used" is indeterminable.

(2) E-Con signal assignments

10-bit output		12-bit output	
Input No.	Signal name	Output No.	Signal name
0	Command position 1	0	Completed position 1
1	Command position 2	1	Completed position 2
2	Command position 4	2	Completed position 4
3	Command position 8	3	Completed position 8
4	Command position 16	4	Completed position 16
5	Command position 32	5	Completed position 32
6	Not used	6	Not used (Note 2)
7	Not used	7	Not used (Note 2)
8	Start	8	Positioning complete
9	Reset	9	Home return complete
10	Servo on	10	Zone
11	*Pause	11	*Alarm
12	Not used	12	*Emergency stop
13	Not used	13	Moving
14	Not used	14	*Battery alarm (Note 1)
15	Not used	15	Not used (Note 2)

The signals denoted by * are always ON.
(Note 1) The ON/OFF state of this signal is indeterminable if an incremental encoder is used.
(Note 2) The ON/OFF state of signals denoted by “Not used” is indeterminable.

Reference

Inputs and outputs are assigned to bit addresses in the PLC sequentially from the youngest number, for the channel corresponding to the node address set with the DIP switches.

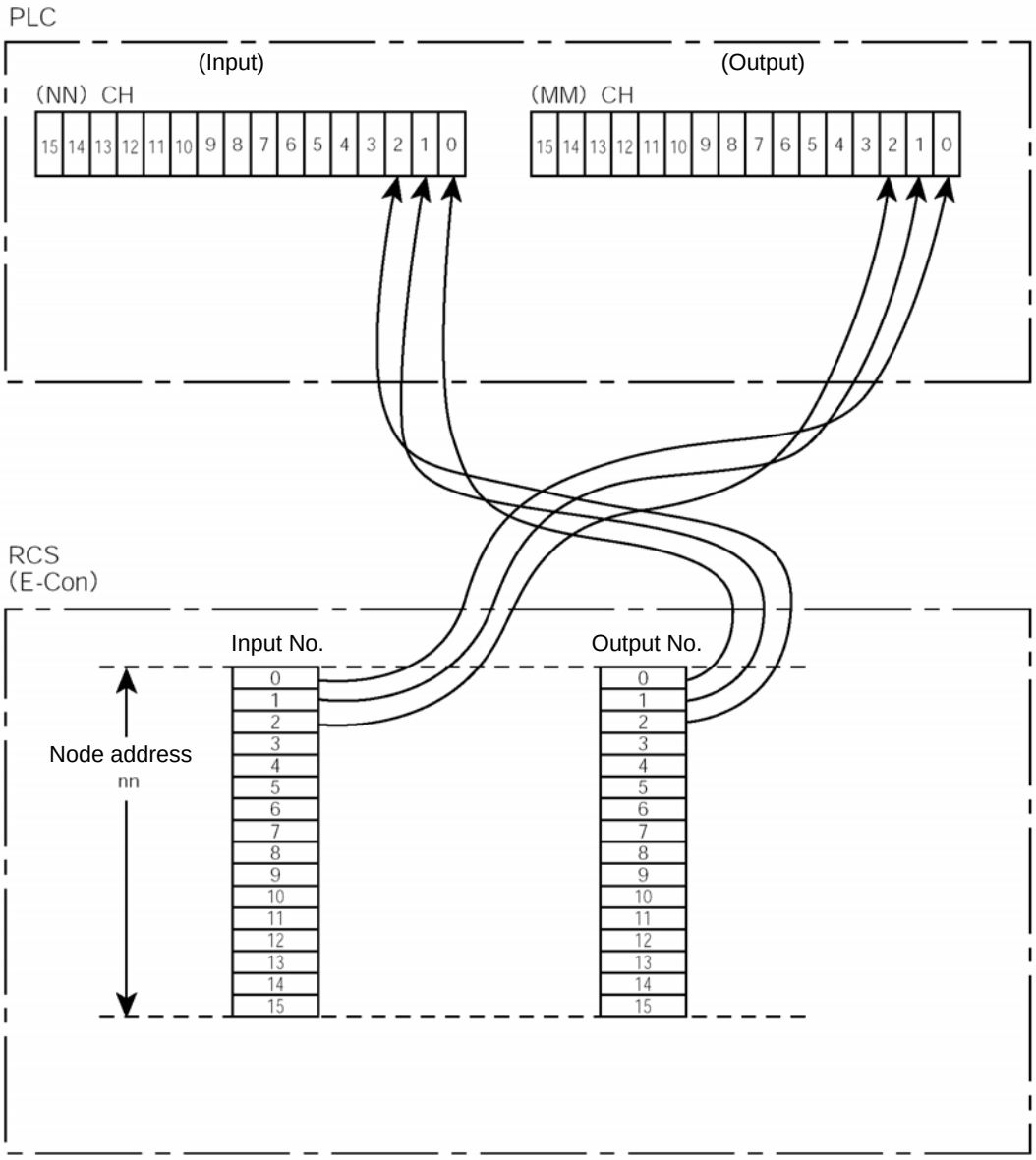

(NN) CH and (MM) CH as indicated above represent PLC channel addresses corresponding to node address nn.

5. SCON

5.1 Model

A DeviceNet-ready SCON controller is shown below.
SCON

Model: SCON-C-□□-DV-□-□
Number of I/O points: 16 dedicated input points, 16 dedicated output points

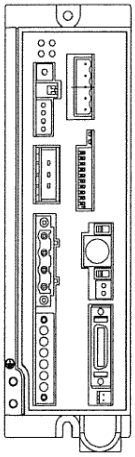

5.2 Interface Specifications

<table>
<tr><th>Item</th><th colspan="4">Specification</th></tr>
<tr><td rowspan="3">Communication protocol</td><td colspan="4">DeviceNet 2.0 (*1)</td></tr>
<tr><td colspan="4">Group 2 only server</td></tr>
<tr><td colspan="4">Network-powered insulation node</td></tr>
<tr><td rowspan="2">Support connection</td><td colspan="2" rowspan="2">Master-slave connection</td><td colspan="2">Bit strobe</td></tr>
<tr><td colspan="2">Polling</td></tr>
<tr><td>Baud rate</td><td colspan="4">500 k / 250 k / 125 kbps (selectable by DIP switches)</td></tr>
<tr><td rowspan="5">Communication cable length</td><td>Baud rate</td><td>Maximum network length</td><td>Maximum branch line length</td><td>Total branch line length</td></tr>
<tr><td>500 kbps</td><td>100 m</td><td rowspan="3">6 m</td><td>39 m</td></tr>
<tr><td>250 kbps</td><td>250 m</td><td>78 m</td></tr>
<tr><td>125 kbps</td><td>500 m</td><td>156 m</td></tr>
<tr><td colspan="4">Note) When a large-size DeviceNet cable is used.</td></tr>
<tr><td>Communication power supply</td><td colspan="4">24 VDC (supplied from DeviceNet)</td></tr>
<tr><td>Consumption current of communication power supply</td><td colspan="4">60 mA</td></tr>
<tr><td>Number of occupied nodes</td><td colspan="4">1 node</td></tr>
<tr><td>Connector</td><td colspan="4">MSTBA2.5/5-G-5.08AU M (*2) by Phoenix Contact</td></tr>
</table>

(*1) RCS-C controllers are already certified (test version 15).
Certification is pending for E-Con controllers.
(*2) The cable-end connector is a standard accessory.
SMSTB2.5/5-ST-5.08AU by Phoenix Contact

5.3 DeviceNet Interface

5.3.1 Name of Each Part

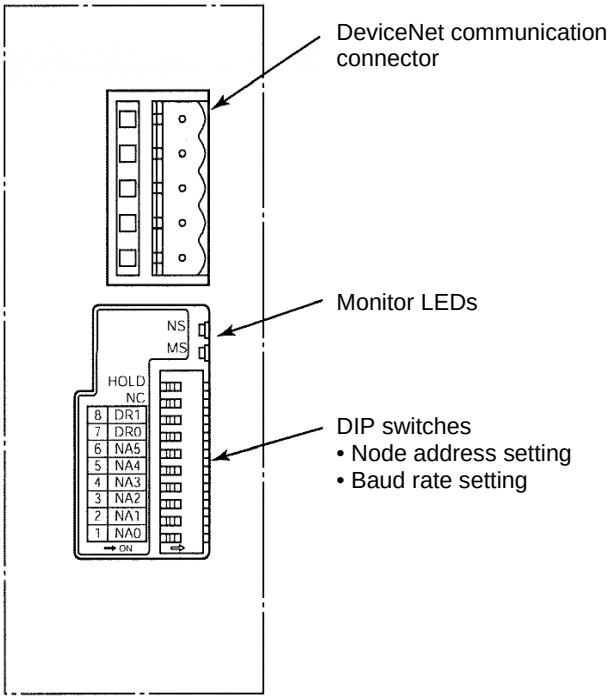

5.3.2 DIP Switch Settings

The DIP switches are used to set the following items:

(1) Node address
(2) Baud rate
(Note) Turn off the X-SEL power before setting the DIP switches.

(1) Setting the node address (MAC ID)

Set the node address (MAC ID) using a hexadecimal value according to the table below.

1: ON 0: OFF

	DIP switches					
Node address (MAC ID)	NA5	NA4	NA3	NA2	NA1	NA0
0	0	0	0	0	0	0
1	0	0	0	0	0	1
2	0	0	0	0	1	0
3	0	0	0	0	1	1
⋮	⋮	⋮	⋮	⋮	⋮	⋮
60	1	1	1	1	0	0
61	1	1	1	1	0	1
62	1	1	1	1	1	0
63	1	1	1	1	1	1

(Note) The node address corresponds to the remote I/O address in the PLC. (For details, refer to the operation manual for the PLC.)

(2) Setting the baud rate

Set the baud rate according to the table below.

1: ON 0: OFF

	DIP switches	
Baud rate	DR1	DR0
125 kbps	0	0
250 kbps	0	1
500 kbps	1	0
Setting prohibited	1	1

5.3.3 Monitor LED Indicators

The two LEDs, MS and NS, provided on the front panel of the controller are used to check the interface (node) condition and network condition.
The LEDs illuminate in two colors (red and green), and you can monitor the conditions listed in the table below based on the illumination status and color of each LED.

MS (Module Status) LED: Condition of the interface (node) itself
NS (Network Status) LED: Condition of the network

LED	Color	Illumination status	Description (meaning)
MS	Green	Steady light	The board is operating normally.
	Red	Steady light	A hardware error occurred. The controller must be repaired.
		Blinking	A minor error occurred, such as a DIP switch setting error or configuration error. The error can be reset by, for example, reconfiguring the applicable setting.
	-	Off	Power is not supplied from the X-SEL controller. The X-SEL controller must be repaired or the board must be replaced.
NS	Green	Steady light	Network connection has been established and the board is communicating normally.
		Blinking	The board is online, but network connection is not yet established. Communication is stopped. (The network is normal.)
	Red	Steady light	Node address duplication or bus-off state was detected. Communication is not possible.
		Blinking	A communication error occurred (communication time-out occurred).
	-	Off	• The board is not online. • DeviceNet power is not supplied.

Self test is performed when the power is turned on.
During the test, the monitor LEDs cycle in the following sequence:
[1] NS turns off.
[2] MS illuminates in steady green (approx. 0.25 second).
[3] MS illuminates in steady red (approx. 0.25 second).
[4] MS illuminates in steady green.
[5] NS illuminates in steady green (approx. 0.25 second).
[6] NS illuminates in steady red (approx. 0.25 second).
[7] NS turns off.
When the self test is finished and the board starts communicating normally, both the MS and NS LEDs change to steady green.

5.4 Assignment of I/O Signals

The I/O specifications of SCON controllers are as follows:
16 dedicated input points, 16 dedicated output points
The details are explained below.
Six I/O patterns are available, from which a desired pattern can be selected using Parameter No. 25 (PIO pattern selection).
For details on each signal, refer to the “Operation Manual for SCON Controller.”

		Setting of Parameter No. 25					
		Positioning mode (standard)		Teaching mode (teaching type)		256-point mode (256-point type)	
		0		1		2	
Category	Port No.	Signal name	Symbol	Signal name	Symbol	Signal name	Symbol
Input	0	Command position number	PC1	Command position number	PC1	Command position number	PC1
	1		PC2		PC2		PC2
	2		PC4		PC4		PC4
	3		PC8		PC8		PC8
	4		PC16		PC16		PC16
	5		PC32		PC32		PC32
	6	Not available.	-	Teaching mode command (operation mode)	MODE		PC64
	7		-	Jog/inch switching	JISL		PC128
	8		-	+Jog	JOG+	Not available.	-
	9	Forced brake release	BKRL	-Jog	JOG-	Forced brake release	BKRL
	10	Operation mode	RMOD	Operation mode	RMOD	Operation mode	RMOD
	11	Home return	HOME	Home return	HOME	Home return	HOME
	12	Pause	*STP	Pause	*STP	Pause	*STP
	13	Positioning start	CSTR	Positioning start/position-data read command	CSTR/ PWRT	Positioning start	CSTR
	14	Reset	RES	Reset	RES	Reset	RES
	15	Servo ON command	SON	Servo ON command	SON	Servo ON command	SON
Output	0	Completed position number	PM1	Completed position number	PM1	Completed position number	PM1
	1		PM2		PM2		PM2
	2		PM4		PM4		PM4
	3		PM8		PM8		PM8
	4		PM16		PM16		PM16
	5		PM32		PM32		PM32
	6	Moving signal	MOVE	Moving signal	MOVE		PM64
	7	Zone 1	ZONE1	Teaching mode signal	MODES		PM128
	8	Position zone	PZONE	Position zone	PZONE	Position zone	PZONE
	9	Operation mode status	RMDS	Operation mode status	RMDS	Operation mode status	RMDS
	10	Home return complete	HEND	Home return complete	HEND	Home return complete	HEND
	11	Position complete signal	PEND	Position complete signal/position-data read complete	PEND/ WEND	Position complete signal	PEND
	12	Ready	SV	Ready	SV	Ready	SV
	13	Emergency stop	*EMGS	Emergency stop	*EMGS	Emergency stop	*EMGS
	14	Alarm	*ALM	Alarm	*ALM	Alarm	*ALM
	15	Battery alarm	*BALM	Battery alarm	*BALM	Battery alarm	*BALM

The signals indicated by * are ON in a normal state.
The signals denoted by “Not available” are not controlled (their ON/OFF status is indeterminable).
The battery alarm signal is always (mount to) ON if an incremental encoder is used.

		Setting of Parameter No. 25					
		512-point mode		Solenoid mode 1		Solenoid mode 2	
		3		4		5	
Category	Port No.	Signal name	Symbol	Signal name	Symbol	Signal name	Symbol
Input	0	Command position number	PC1	Start position 0	ST0	Start position 0	STO
	1		PC2	Start position 1	ST1	Start position 1	ST1
	2		PC4	Start position 2	ST2	Start position 2	ST2
	3		PC8	Start position 3	ST3	Not available.	-
	4		PC16	Start position 4	ST4		-
	5		PC32	Start position 5	ST5		-
	6		PC64	Start position 6	ST6		-
	7		PC128	Not available.	-		-
	8		PC256		-		-
	9	Forced brake release	BKRL	Forced brake release	BKRT	Forced brake release	BKRL
	10	Operation mode	RMOD	Operation mode	RMOD	Operation mode	RMOD
	11	Home return	HOME	Home return	HOME	Not available.	-
	12	Pause	*STP	Pause	*STP		-
	13	Positioning start	CSTR	Not available.	-		-
	14	Reset	RES	Reset	RES	Reset	RES
	15	Servo ON command	SON	Servo ON command	SON	Servo ON command	SON
Output	0	Completed position number	PM1	Position 0 complete	PE0	Rear end move command 0	LS0
	1		PM2	Position 1 complete	PE1	Rear end move command 1	LS1
	2		PM4	Position 2 complete	PE2	Rear end move command 2	LS2
	3		PM8	Position 3 complete	PE3	Not available.	-
	4		PM16	Position 4 complete	PE4		-
	5		PM32	Position 5 complete	PE5		-
	6		PM64	Position 6 complete	PE6		-
	7		PM128	Zone 1	ZONE1	Zone 1	ZONE1
	8		PM256	Position zone	PZONE	Position zone	PZONE
	9	Operation mode output	RMDS	Operation mode output	RMDS	Operation mode output	RMDS
	10	Home return complete	HEND	Home return complete	HEND	Home return complete	HEND
	11	Position complete signal	PEND	Position complete signal	PEND	Not available.	-
	12	Ready	SV	Ready	SV	Ready	SV
	13	Emergency stop	*EMGS	Emergency stop	*EMGS	Emergency stop	*EMGS
	14	Alarm	*ALM	Alarm	*ALM	Alarm	*ALM
	15	Battery alarm	*BALM	Battery alarm	*BALM	Battery alarm	*BALM

The signals indicated by * are ON in a normal state.
The signals denoted by “Not available” are not controlled (their ON/OFF status is indeterminable).
The battery alarm signal is always (mount to) ON if an incremental encoder is used.

5.5 Assignment of DeviceNet Addresses

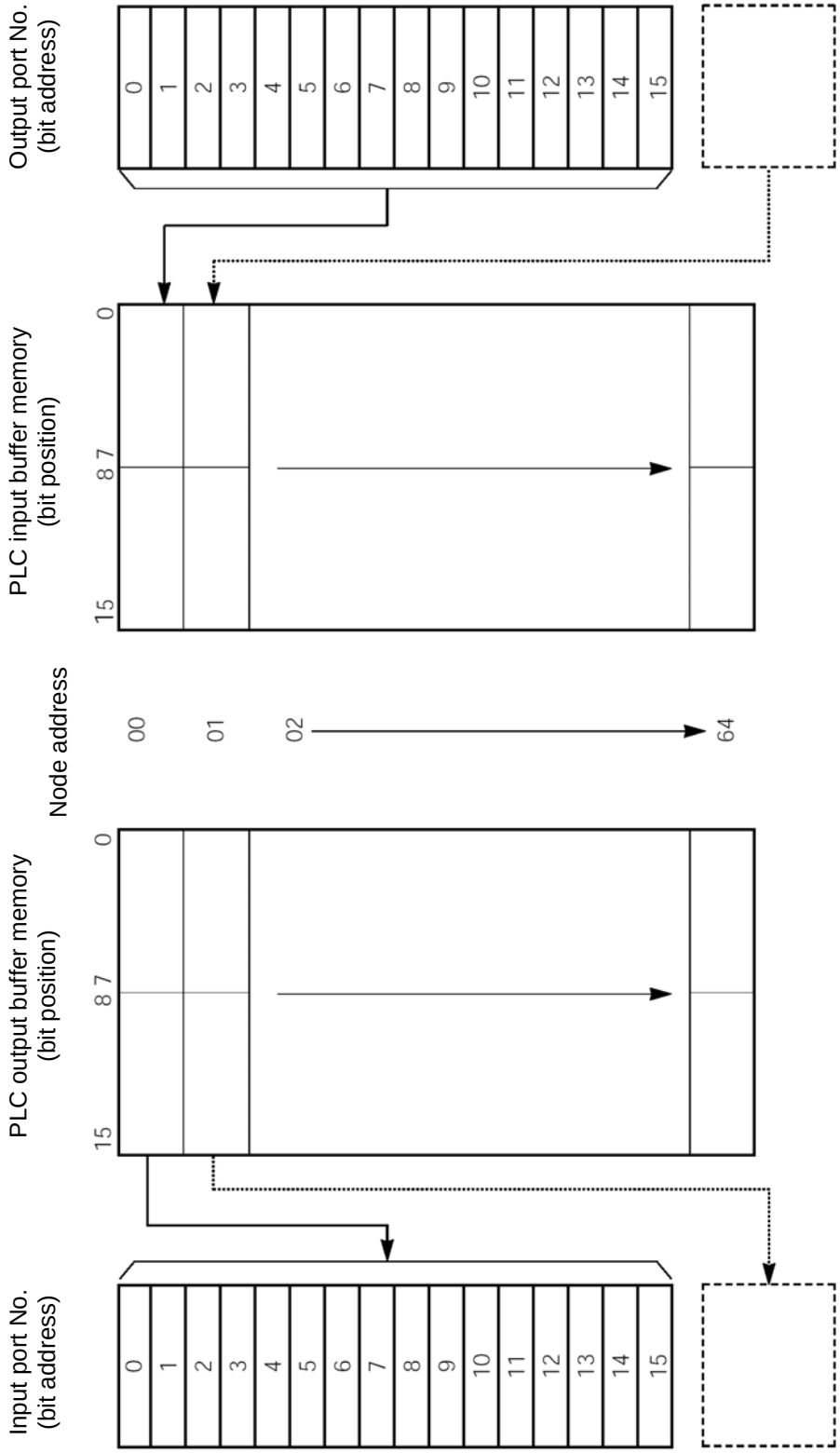

- The above figure assumes that the node address of the controller's DeviceNet board is set to "0."
- I/O ports are assigned in units of 16 points to the memory area corresponding to one DeviceNet node address.
- I/P ports are assigned sequentially from the youngest number, to the bits in the buffer memory starting from the lower bit.

6. SSEL

SSEL controllers of DeviceNet specification can handle up to 256 input points and 256 output points.

6.1 Models

The model names of SSEL controllers of DeviceNet specification are indicated as follows:

1 axis
SSEL-C-1-□-DV-□
2axes
SSEL-C-2-□-DV-□

Exterior view

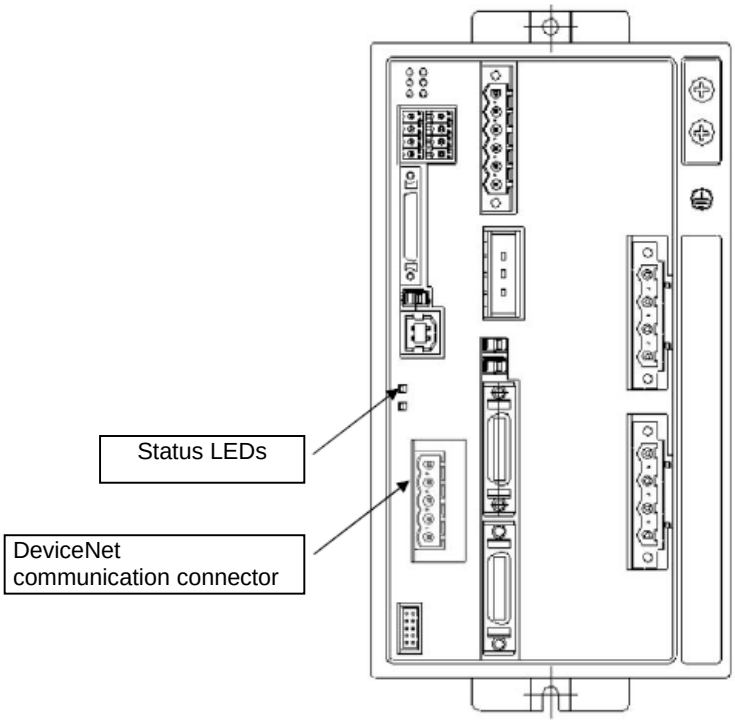

6.2 Interface Specifications

<table>
<tr><th>Item</th><th colspan="4">Specification</th></tr>
<tr><td rowspan="3">Communication protocol</td><td colspan="4">DeviceNet 2.0.</td></tr>
<tr><td colspan="4">Group 2 only server</td></tr>
<tr><td colspan="4">Network-powered insulation node</td></tr>
<tr><td rowspan="2">Communication specification</td><td colspan="2" rowspan="2">Master-slave connection</td><td colspan="2">Bit strobe</td></tr>
<tr><td colspan="2">Polling</td></tr>
<tr><td>Baud rate</td><td colspan="4">500 k / 250 k / 125 kbps (automatically set to the same value as the band rate set in the master)</td></tr>
<tr><td rowspan="5">Communication cable length</td><td>Baud rate</td><td>Maximum network length</td><td>Maximum branch line length</td><td>Total branch line length</td></tr>
<tr><td>500 kbps</td><td>100 m</td><td rowspan="3">6 m</td><td>39 m</td></tr>
<tr><td>250 kbps</td><td>250 m</td><td>78 m</td></tr>
<tr><td>125 kbps</td><td>500 m</td><td>156 m</td></tr>
<tr><td colspan="4">Note) When a large-size DeviceNet cable is used.</td></tr>
<tr><td>Communication power supply</td><td colspan="4">24 VDC (supplied from DeviceNet)</td></tr>
<tr><td>Consumption current of communication power supply</td><td colspan="4">Typ. 30mA/Max. 55 mA</td></tr>
<tr><td>Number of occupied nodes</td><td colspan="4">1 node</td></tr>
<tr><td>Connector</td><td colspan="4">MSTBA2.5/5-G-5.08AU M (*1) by Phoenix Contact</td></tr>
</table>

(*1) The cable-end connector is a standard accessory.
SMSTB2.5/5-ST-5.08AU by Phoenix Contact

6.3 DeviceNet board

(1) Name of Each Part

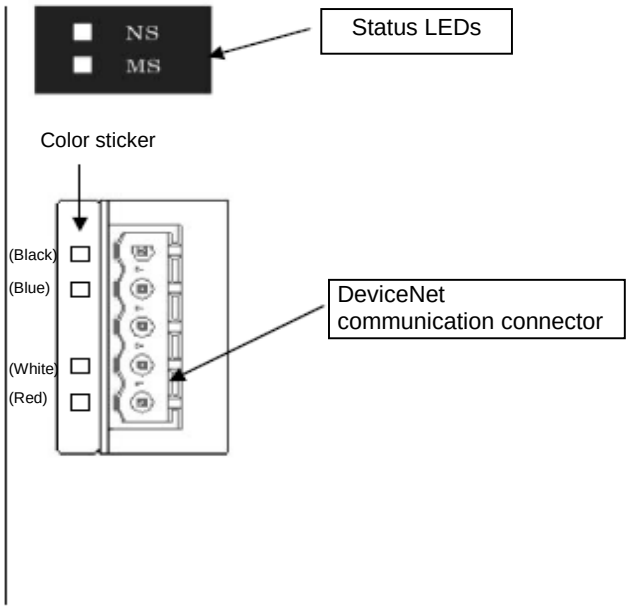

(2) Status LED indications

The two LEDs provided on the front side of the board (front panel of the controller) are used to check the operating condition of the DeviceNet board and network condition.

NS (Network Status) LED: Condition of DeviceNet communication
MS (Module Status) LED: Condition of the controller (node)

LED	Color	Illumination status	Description
NS	Green	Steady light	Connection has been established and communication is being performed properly.
		Blinking (1Hz)	The status is online, but connection is not established yet. Communication is stopped (network is normal).
	Orange	Steady light	Communication is disabled due to a node address duplication or bus OFF error.
		Blinking (1Hz)	A communication error has occurred due to a timeout.
	-	Off	The status is not online. • Still checking the baud rate • Still checking for node address duplication • DeviceNet power is not supplied. • A WDT (watchdog timer) error is present.
MS	Green	Steady light	The controller is operating normally (initialization has completed).
		Blinking (1Hz)	A user interruption timeout has occurred.
	Orange	Steady light	A hardware error, DP-RAM error or WDT (watchdog timer) error is present.
		Blinking (1Hz)	A user setting error or EEP-ROM checksum error is present.
	-	Off	Power is not supplied to the fieldbus module. The controller is being initialized.

A self-test is performed when the power is turned on. Both the NS and MS LEDs alternate between orange and green during the self-test. Once the self-test has completed and the DeviceNet/controller conditions have been confirmed normal, both LEDs change to a steady green light.

(3) DeviceNet connectors

The following connectors by Phoenix Contact are used for the board-end and cable-end connectors:

Board-end connector: MSTBA2.5/5-G-5.08AU
Cable-end connector: SMSTB2.5/ST/5.08AU

Color stickers corresponding to the wire colors are attached on each connector.
The cable-end connector is a standard accessory.
For the details of signals assigned to respective pins, refer to Chapter 8, “Common Items and Others.”

⚠ Caution

(1) The baud rate is automatically set to the same value as the baud rate set in the master. Accordingly, you need not set the baud rate.
(2) The node address is set by I/O parameter No. 226.

6.4 Setting of I/O Parameters

Set the node address, I/O ports and other parameters of the of the SSEL controller used for DeviceNet communication.

(1) Network type setting

I/O parameter No. 225, “Network I/F module control” has been set to “2H (DeviceNet”) at the factory. Accordingly, you need not set the network type. (This parameter is read-only.)

(2) Node address

Set the node address using I/O parameter No. 226, “Network I/O module – Communication attribute 1.” A desired value can be set in a range of 0 to 63.

(Note) If the set address is outside the above range, “D75: Fieldbus parameter error” will occur.

(3) I/O port assignments

Set the numbers of physical I/O ports of the SSEL controller to be used in the DeviceNet system, and port assignments, using the following I/O parameters:
No. 1 “I/O port assignment type”
No. 14 “Network I/F module – Number of available remote input ports”
No. 15 “Network I/F module – Number of available remote output ports”
No. 16 “Network I/F module – First input port number based on mount assignment”
No. 17 “Network I/F module – First output port number based on mount assignment”

For details, refer to “List of SSEL network I/O parameters.”

(Note) With SSEL controllers, the following I/O parameters are invalid when the DeviceNet module is used. Even if these parameters are set, they will not affect the numbers of available DeviceNet ports, assigned port numbers, etc.
No. 2 “Standard I/O – First input port number based on mount assignment (I/O1)”
No. 3 “Standard I/O – First output port number based on mount assignment (I/O1)”
No. 10 ”Standard I/O – Error monitor”

(4) Network error monitor

Set whether or not to monitor network errors using I/O parameter No. 18 “Network I/F module – Error monitor.” Set the error check time using bits 4 to 11 of I/O parameter No. 120, “Network attribute 1.”
If a network link error has continued for at least the time set in parameter No. 120, a system error will occur.
For details, refer to “List of SSEL network I/O parameters.”

List of SSEL network I/O parameters

No.	Parameter name	Factory setting	Input range	Remarks
1	I/O port assignment type	0	0~20	0: Fixed assignment 1: Automatic assignment
14	Network I/F module – Number of available remote input ports	64	0~256	Multiple of 8
15	Network I/F module – Number of available remote output ports	64	0~256	Multiple of 8
16	Network I/F module – First input port number based on mount assignment	0	-1~599	0 + (multiple of 8) (Invalid, if a value is entered with a negative sign.)
17	Network I/F module – First output port number based on mount assignment	300	-1~599	300 + (multiple of 8) (Invalid, if a value is entered with a negative sign.)
18	Network I/F module – Error monitor	1	0~5	0: Do not monitor 1: Monitor * If a network link error status has continued for at least the network-link error check timer value, a system error will occur. (Refer to I/O parameter No. 120.) * Some exceptions apply.
120	Network attribute 1	1H	0H~ FFFFFFFFH	Bits 0 to 3: Reserved by the system. Bits 4 to 11: Network-link error check timer value (Setting unit: 10 msec) This parameter is valid only when I/O parameter No. 18 is set to “1.” (Example) If the set value (bits 4 to 11) is “05H,” the timer period becomes 10 ms x 5 = 50 ms. If the set value is “0H,” a system error will occur immediately upon occurrence of a network link error.
225	Network I/F module control	2H	Read-only	Bits 0 to 3: Network I/F module type (0: Not installed, 1: CC-Link module, 2: DeviceNet module)
226	Network I/F module – Communication attribute 1	0	0~999	Node address of the network I/F module * DeviceNet module: 0 to 63
227	Network I/F module – Communication attribute 2	0H	0H~ FFFFFFFFH	Bits 0 to 3: Baud rate type of the network I/F module * With the DeviceNet module, the baud rate is automatically set to the same value as the baud rate set in the master. Accordingly, you need not set the baud rate.

6.5 Assignment of SSEL I/O Port Numbers and DeviceNet Addresses

SSEL controllers provide the program mode and positioner mode, but the principles of how ports and addresses are assigned are the same in both modes. To be specific, I/O port numbers are assigned in units of 16 points from the channel addresses in the PLC buffer memory corresponding to the specified node address. Bits in the PLC buffer memory are assigned to the I/O port numbers, starting from the least significant bit and the youngest port number.

(1) Basic example

The figure below shows the correlation of relevant items when the I/O parameters are set as follows:

No. 16 = 0	(First input port number)
No. 17 = 300	(First output port number)
No. 14 = No. 15 = 16	(Numbers of input/output ports)
No. 266 = nn	(Node address)

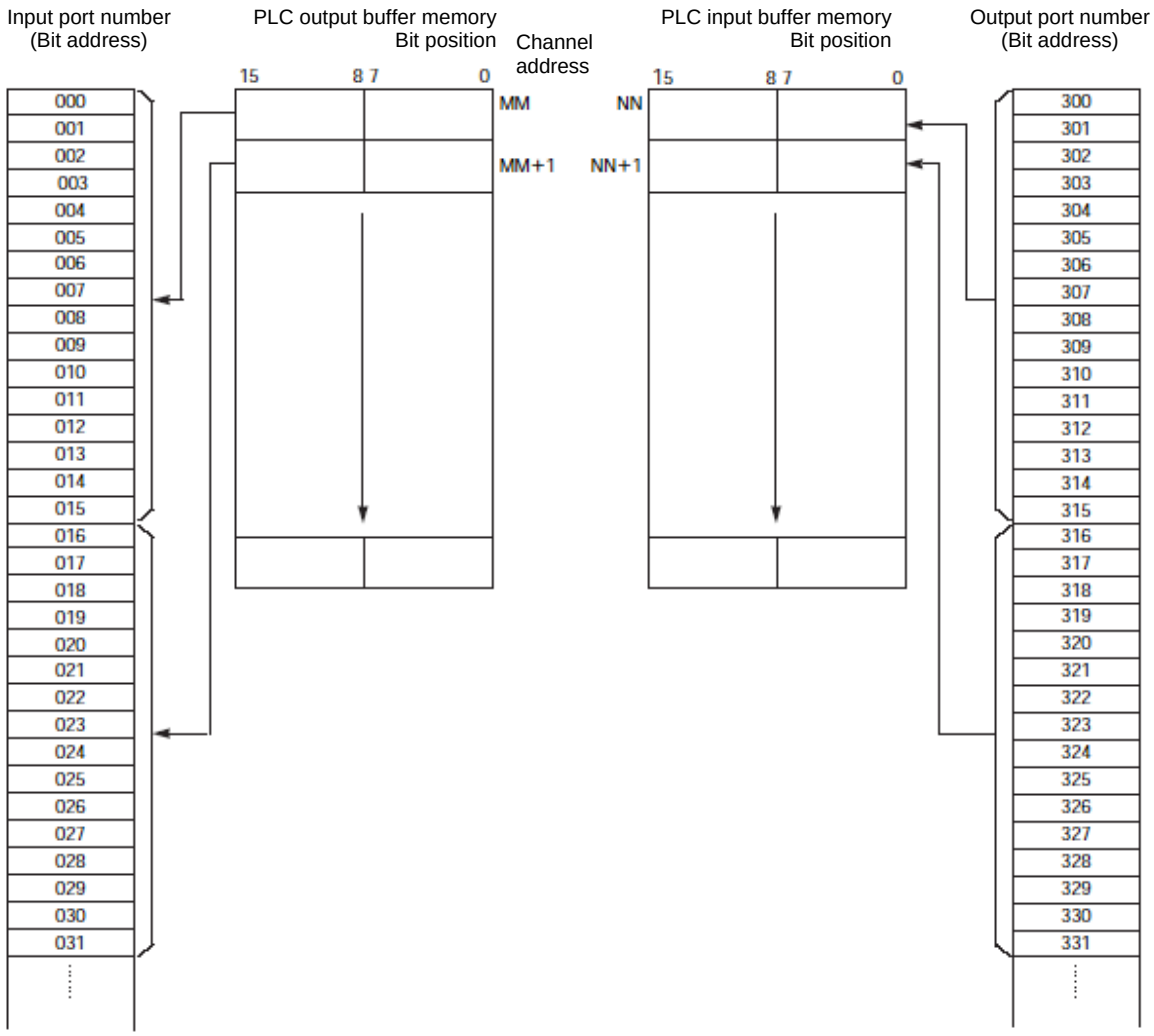

(Note) NN and MM indicate PLC channel addresses corresponding to node address nn.
Node addresses nn, nn+1, nn+2, and so on, are occupied according to the numbers of input/output points used. Accordingly, exercise caution to avoid node address duplication.

(2) Using an SSEL controller in the positioner mode

Regardless of the settings of I/O parameter Nos. 1, 16 and 17, physical input ports are assigned from No. 0, while physical output ports are assigned from No. 300.
As shown in the I/O port table on the next page, input port Nos. 0 to 23 and output port Nos. 300 to 307 are used.
I/O parameter Nos. 14 and 15 are both set to “24.”

(Note) I/O parameter Nos. 14 and 15 should be set to the same value corresponding to either the number of input ports or output ports whichever is greater.

I/O port table in positioner mode

Category	Port No.	Positioner mode				
		Standard mode	Type switching mode	2-axis independent mode	Teaching mode	DC-S-C1 compatible mode
Input	16	Position input 10	Input 10	Position input 7	Axis 1 jog-	Position No. 1000 input
	17	Position input 11	Input 11	Position input 8	Axis 2 jog+	Position No. 2000 input
	18	Position input 12	Input 12	Position input 9	Axis 2 jog-	Position No. 4000 input
	19	Position input 13	Input 13	Position input 10	Inch (0.01 mm)	Position No. 8000 input
	20	Position input 14	Input 14	Position input 11	Inch (0.1 mm)	Position No. 10000 input
	21	Position input 15	Input 15	Position input 12	Inch (0.5 mm)	Position No. 20000 input
	22	Position input 16	Input 16	Position input 13	Inch (1 mm)	(Mount to OFF)
	23	Error reset	Error reset	Error reset	Error reset	CPU reset
	0	Start	Start	Axis 1 start	Start	Start
	1	Home return	Home return	Home return	Servo ON	Pause
	2	Servo ON	Servo ON	Axis 1 servo ON	*Pause	Cancel
	3	Push motion	Push motion	*Axis 1 pause	Position input 1	Interpolation setting
	4	*Pause	*Pause	*Axis 1 cancel	Position input 2	Position input 1
	5	*Cancel	*Cancel	Axis 2 start	Position input 3	Position input 2
	6	Interpolation	Interpolation	Axis 2 home return	Position input 4	Position input 4
	7	Position input 1	Input 1	Axis 2 servo ON	Position input 5	Position input 8
	8	Position input 2	Input 2	*Axis 2 pause	Position input 6	Position input 10
	9	Position input 3	Input 3	*Axis 2 cancel	Position input 7	Position input 20
	10	Position input 4	Input 4	Position input 1	Position input 8	Position input 40
	11	Position input 5	Input 5	Position input 2	Position input 9	Position input 80
	12	Position input 6	Input 6	Position input 3	Position input 10	Position input 100
	13	Position input 7	Input 7	Position input 4	Position input 11	Position input 200
	14	Position input 8	Input 8	Position input 5	Teaching mode specification	Position input 400
	15	Position input 9	Input 9	Position input 6	Axis 1 jog+	Position input 800
Output	300	*Alarm	*Alarm	*Alarm	*Alarm	Alarm
	301	Ready	Ready	Ready	Ready	Ready
	302	Position complete	Position complete	Axis 1 position complete	Position complete	Position complete
	303	Home return complete	Home return complete	Axis 1 home return complete	Home return complete	-
	304	Servo ON output	Servo ON output	Axis 1 servo ON	Servo ON output	-
	305	Push motion complete	Push motion complete	Axis 2 position complete		-
	306	System battery error	System battery error	Axis 2 home return complete	System battery error	System battery error
	307	Absolute battery error	Absolute battery error	Axis 2 servo ON	Absolute battery error	Absolute battery error

*: Contact B

7. ACON, PCON

7.1 Operation Modes and Functions

ACON and PCON controllers of DeviceNet specification can be operated in one of the five modes specified below.

Operation modes and key functions

Key function	Remote I/O mode	Position/simple direct mode	Half direct mode	Full direct mode	Remote I/O mode 2
Number of occupied channels	1CH	4CH	8CH	16CH	6CH
Operation by position data specification	X	O (*1)	O	O	X
Direct specification of speed/acceleration	X	X	O	O	X
Push-motion operation	O	O	O	O	O
Reading of current position	X	O	O	O	O
Reading of current speed	X	X	O	O	O
Operation by position number specification	O	O	X	X	O
Reading of completed position number	O	O	X	X	O
Maximum number of position table positions	512	768	Not used.	Not used.	512

(*1) The actuator is operated by specifying all position data, other than the position, using a position number.

[1] Remote I/O mode: In this mode, the actuator is operated using PIOs (24-V I/Os) via DeviceNet communication.
Number of occupied channels: 1 CH

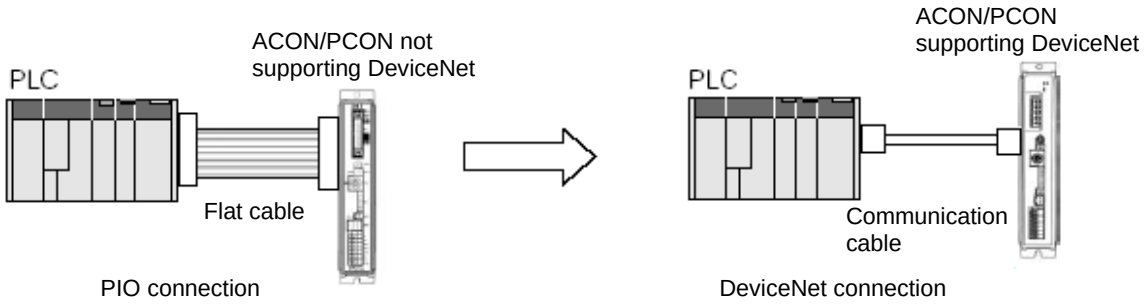

[2] Position/simple direct mode: In this mode, the actuator is operated by specifying position numbers. You can switch the control signal to select whether to specify the target position directly and numerically or by using a value registered in the position data table.
The speed, acceleration/deceleration, positioning band, etc., are specified using preregistered values in the position data table. Up to 768 sets of position data can be specified.
Number of occupied channels: 4 CH

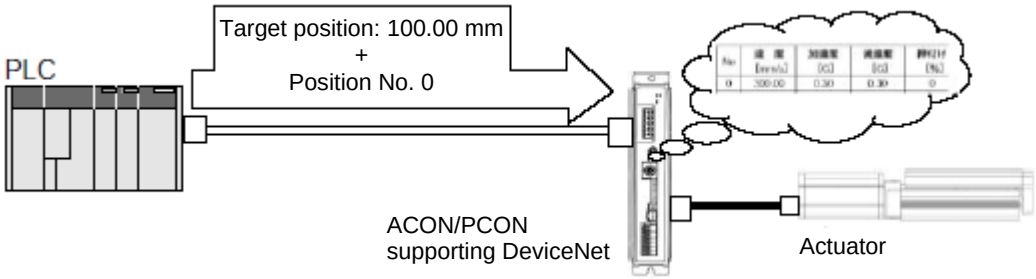

[3] Half direct mode: In this mode, the actuator is operated by specifying the speed, acceleration/deceleration and push-motion current directly and numerically, in addition to the target position.
Number of occupied channels: 8 CH

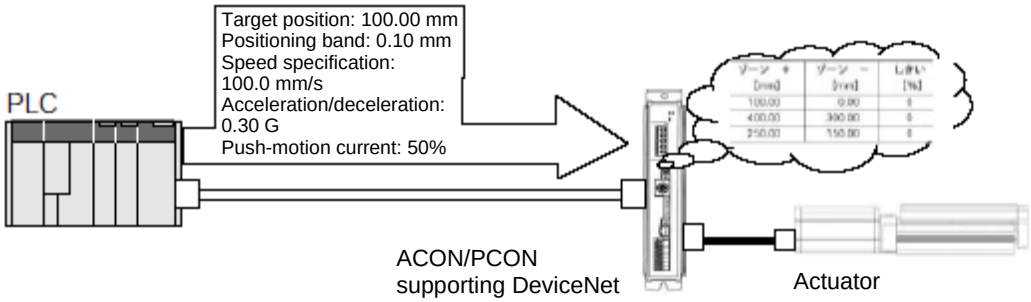

[4] Full direct mode In this mode, the actuator is operated by specifying all values relating to position control (target position, speed, acceleration/deceleration, etc.) directly.
Number of occupied channels: 16 CH

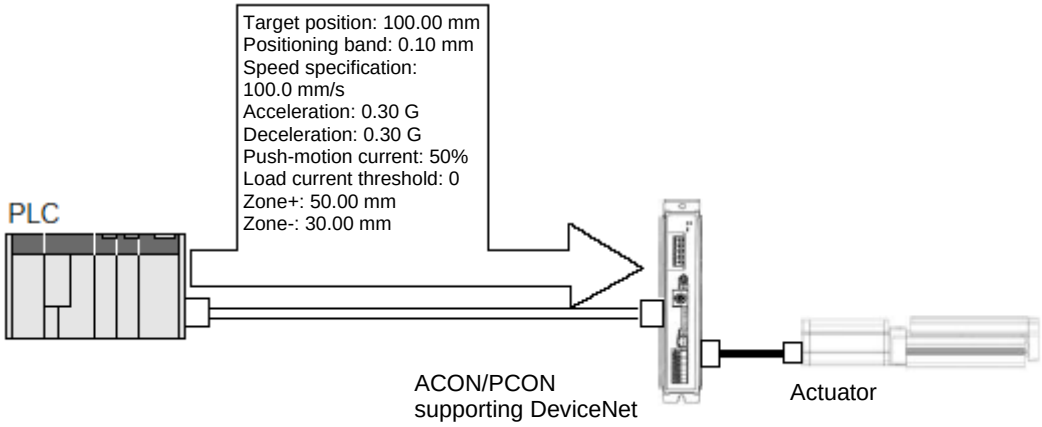

[5] Remote I/O mode 2: In this mode, the actuator is operated using PIOs (24-V I/Os) via DeviceNet communication.
The current-position read function and command-current read function are added to the functions available in the mode specified in [1].
Number of occupied channels: 6 CH

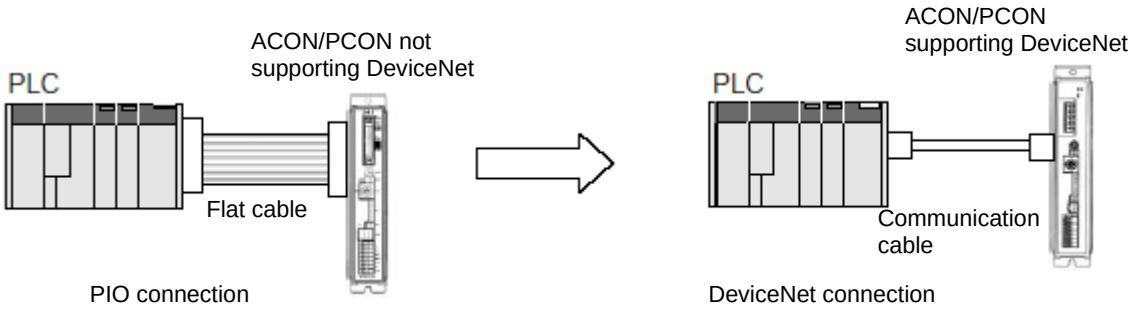

7.2 Models

The model names of ACON and PCON controllers of DeviceNet specification are indicated as follows:

- ACON-C/CG-☐-DV-☐
- PCON-C/CG-☐-DV-☐

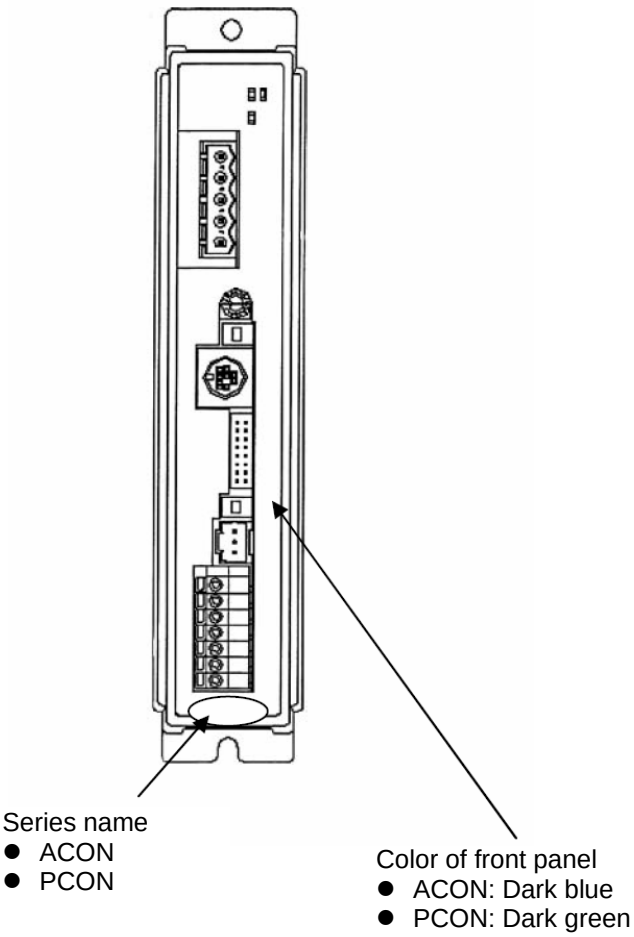

7.3 Interface Specifications

<table>
<tr><th>Item</th><th colspan="4">Specification</th></tr>
<tr><td rowspan="3">Communication protocol</td><td colspan="4">DeviceNet 2.0</td></tr>
<tr><td colspan="4">Group 2 only server</td></tr>
<tr><td colspan="4">Network-powered insulation node</td></tr>
<tr><td rowspan="3">Communication specification</td><td colspan="2" rowspan="3">Master-slave connection</td><td colspan="2">Bit strobe</td></tr>
<tr><td colspan="2">Polling</td></tr>
<tr><td colspan="2">Cyclic</td></tr>
<tr><td>Baud rate</td><td colspan="4">Automatically set to the same value as the band rate set in the master</td></tr>
<tr><td rowspan="5">Communication cable length</td><td>Baud rate</td><td>Maximum network length</td><td>Maximum branch line length</td><td>Total branch line length</td></tr>
<tr><td>500 kbps</td><td>100 m</td><td rowspan="3">6 m</td><td>39 m</td></tr>
<tr><td>250 kbps</td><td>250 m</td><td>78 m</td></tr>
<tr><td>125 kbps</td><td>500 m</td><td>156 m</td></tr>
<tr><td colspan="4">Note) When a large-size DeviceNet cable is used.</td></tr>
<tr><td>Communication power supply</td><td colspan="4">24 VDC (supplied from DeviceNet)</td></tr>
<tr><td>Consumption current of communication power supply</td><td colspan="4">60 mA</td></tr>
<tr><td>Number of occupied nodes</td><td colspan="4">1 node</td></tr>
<tr><td>Connector</td><td colspan="4">MSTBA2.5/5-G-5.08AU M (*1) by Phoenix Contact</td></tr>
</table>

(*1) The cable-end connector is a standard accessory.
SMSTB2.5/5-ST-5.08AU by Phoenix Contact

7.4 DeviceNet Interface

7.4.1 Name of Each Part

The name of each part relating to DeviceNet is shown.

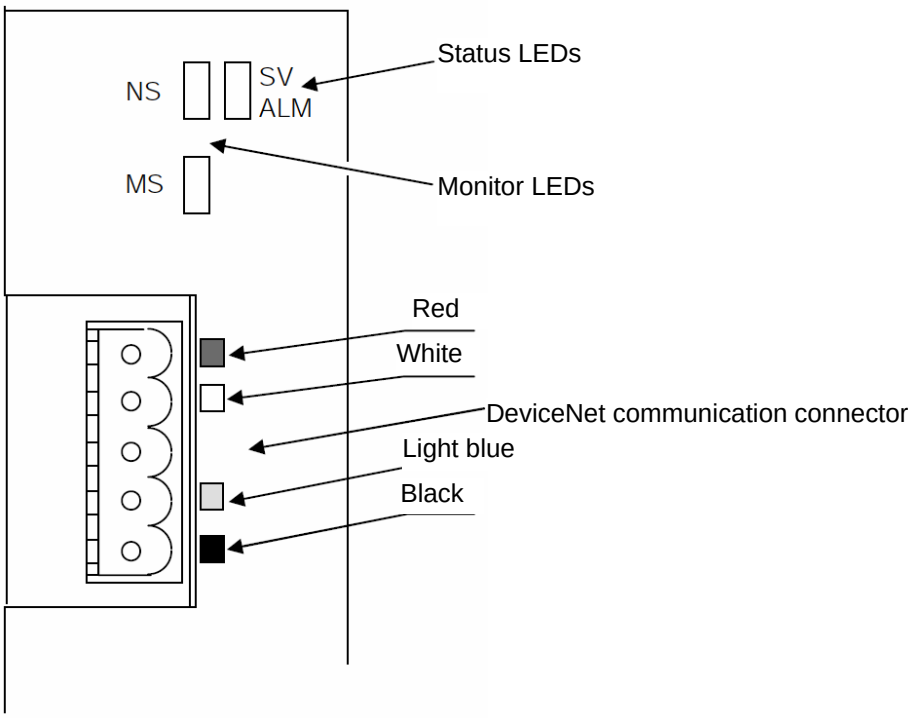

7.4.2 Monitor LED Indicators

The two LEDs, MS and NS, provided on the front panel of the controller are used to check the node (controller) condition and network condition.
The LEDs illuminate in two colors (red and green), and you can monitor the conditions listed in the table below based on the illumination status and color of each LED.

MS (Module Status) LED: Condition of the node (controller)
NS (Network Status) LED: Condition of the network

LED	Color	Illumination status	Description (meaning)
MS	Green	Steady light	The board is operating normally.
		Blinking	A hardware error occurred. The error may be reset by reconnecting the power.
	Orange	Steady light	A hardware error occurred. The board must be replaced.
		Blinking	A user setting error, configuration error or other minor error is present. These errors can be reset by setting the applicable item again, etc.
	-	Off	DeviceNet is initializing or the power is not supplied.
NS	Green	Steady light	Network connection has been established and the board is communicating normally.
		Blinking	The board is online, but network connection is not yet established. Communication is stopped. (The network is normal.)
	Orange	Steady light	Node address duplication or bus-off state was detected. Communication is not possible.
		Blinking	A communication error occurred (communication time-out occurred).
	-	Off	The board is not online. DeviceNet power is not supplied.

Self test is performed when the power is turned on.
During the test, the monitor LEDs cycle in the following sequence:

[1] NS turns off.
[2] MS illuminates in steady green (approx. 0.25 second).
[3] MS illuminates in steady red (approx. 0.25 second).
[4] MS illuminates in steady green.
[5] NS illuminates in steady green (approx. 0.25 second).
[6] NS illuminates in steady red (approx. 0.25 second).
[7] NS turns off.

When the self test is finished and the board starts communicating normally, both the MS and NS LEDs change to steady green.

7.5 Selecting (Setting) the Operation Mode

The operation mode is set using a parameter.
Set the mode selector switch on the front panel of the controller to the MANU position, and set parameter No. 84, “FMOD: Fieldbus operation mode” using the RC PC software (V6.00.05.00 or later). (Refer to 7.10, “DeviceNet Parameters.”)

Set value	Operation mode	Number of occupied stations
0 (Factory setting)	Remote I/O mode	1CH
1	Position/simple direct mode	4CH
2	Half direct mode	8CH
3	Full direct mode	16CH
4	Remote I/O mode 2	6CH

* If any other value is entered, an excessive input error will occur.

7.6 Setting the Node Address

The node address is set using a parameter.
Set parameter No. 85, “NADR: Fieldbus node address” using the RC PC software. (Refer to 7.10, “DeviceNet Parameters.”)

Allowable setting range: 0 to 63 (The parameter has been set to “63” at the factory.)

(Note) Exercise caution to avoid node address duplication.
The nodes (controllers) are assigned in the order of their node address in the remote I/O address areas of the PLC. (This is when the mount assignment mode is selected. A different rule applies when a configurator is used.)
For details, refer to the operation manuals of the master unit and PLC installed in the master unit.

(Note) The baud rate is automatically set to the same value as the baud rate set in the master. Accordingly, you need not set the baud rate.

(Note) After you have set the parameter, reconnect the controller power and return the mode selector switch on the front panel of the controller to the AUTO position. If the switch remains in the MANU position, operation by the PLC cannot be performed.

7.7 Communicating with the Master Station

7.7.1 Operation Modes and Corresponding PLC I/O Areas

The channel assignments in each mode are shown below.

- PLC output → ACON/PCON input (* n indicates the node address of each axis.)

PLC output area (channel)	ACON/PCON DI and input data register				
	Remote I/O mode	Position/simple direct mode	Half direct mode	Full direct mode	Remote I/O mode 2
	Number of occupied channels: 1CH	Number of occupied channels: 4CH	Number of occupied channels: 8CH	Number of occupied channels: 16CH	Number of occupied channels: 6CH
n	Port number 0 to 15	Target position	Target position	Target position	Port number 0 to 15
n+1					Occupied area
n+2		Specified position number	Positioning band	Positioning band	
n+3		Control signal			
n+4			Speed	Speed specification	
n+5			Acceleration/ deceleration		
n+6			Push-motion current-limiting value	Zone boundary+	
n+7			Control signal		
n+8				Zone boundary-	
n+9					
n+10				Acceleration	
n+11				Deceleration	
n+12				Push-motion current-limiting value	
				ACON / Occupied area	
n+13				PCON / Load current threshold	
n+14				Control signal 1	
n+15				Control signal 2	

(Note) The areas denoted by “occupied area” are occupied according to the operation mode setting. These areas cannot be used for any other purpose. Also exercise caution to avoid node address duplication.

- ACON/PCON output → PLC input side (* n indicates the node address of each axis.)

PLC input area (channel)	ACON/PCON DO and output data register				
	Remote I/O mode	Position/simple direct mode	Half direct mode	Full direct mode	Remote I/O mode 2
	Number of occupied channels: 1CH	Number of occupied channels: 4CH	Number of occupied channels: 8CH	Number of occupied channels: 16CH	Number of occupied channels: 6CH
n	Port number 0 to 15	Current position	Current position	Current position	Port number 0 to 15
n+1					Occupied area
n+2		Completed position number (simple alarm ID)	Command current	Command current	Current position
n+3					
n+4		Status signal			
n+5			Current speed	Current speed	Command current
n+6					
n+7			Alarm code	Alarm code	
n+8			Status signal	Occupied area	
n+9					
n+10					
n+11					
n+12					
n+13					
n+14					
n+15				Status signal	

(Note) The areas denoted by “occupied area” are occupied according to the operation mode setting. These areas cannot be used for any other purpose. Also exercise caution to avoid node address duplication.

7.7.2 Remote I/O Mode (Number of Occupied Channel: 1)

In this mode, the actuator is operated by specifying position numbers, just like you do when PIOs (24-V I/Os) are used.
Set position data using the RC PC software or teaching pendant.
The number of available positions is determined by the setting of parameter No. 25, “PIO pattern.”
The I/O specifications for each PIO pattern are shown below. (For details, refer to the operation manual for the controller.)

Value set in parameter No. 25	Operation mode	I/O specification
0	Positioning mode	64 positioning points and two zone output points are available.
1	Teaching mode	64 positioning points and one zone output point is available. Positioning operation and jog operation are supported. The current position can be written to a specified position.
2	256-point mode	256 positioning points and one zone output point is available.
3	512-point mode	512 positioning points are available. There are no zone outputs.
4	Solenoid mode 1	7 positioning points and two zone output points are available. A direct operation command can be issued for each position number. A position complete signal is output for each position number.
5	Solenoid mode 2	3 positioning points and two zone output points are available. The actuator is operated by specifying forward, backward and intermediate position commands. A position complete signal is output separately for the front end, rear end and intermediate position.

The key ROBO Cylinder functions that can be controlled in this mode are summarized in the table below.

ROBO Cylinder function	PIO patterns					
	0: Positioning mode	1: Teaching mode	2: 256-point mode	3: 512-point mode	4: Solenoid mode 1	5: Solenoid mode 2
Home-return operation	○	○	○	○	○	X
Positioning operation	○	○	○	○	○	○
Speed and acceleration/deceleration setting	○	○	○	○	○	○
Pitch feed (inching)	○	○	○	○	○	○
Push-motion operation	○	○	○	○	○	X
Speed change during movement	○	○	○	○	○	○
Operation at different acceleration and deceleration	○	○	○	○	○	○
Pause	○	○	○	○	○	○ (*1)
Zone signal output	○	○	○	X	○	○
PIO pattern selection (set by a parameter)	○	○	○	○	○	○

○: Supported / X: Not supported

(*1) This function is supported when parameter No. 27, “Move command type” is set to “0.”
The actuator can be paused by turning the move command OFF.

(1) PLC channel configuration (* n indicates the node address of each axis.)

Parameter No. 84	ACON/PCON DI (port number)	PLC output channel	ACON/PCON DO (port number)	PLC input channel
0	0~15	n+0	0~15	n+0

(Note) Exercise caution to avoid node address duplication.

(2) I/O signal assignments for each axis

The I/O signals of each axis consist of one input word (channel) and one output word (channel) in the I/O areas.

- Each channel is controlled by ON/OFF bit signals.

PLC output
Channel (* n indicates the node address of each axis.)

1 word (channel) = 16 bits

n+0	F	E	D	C	B	A	9	8	7	6	5	4	3	2	1	0
Controller input port number	15	14	13	12	11	10	9	8	7	6	5	4	3	2	1	0

PLC input
Channel (* n indicates the node address of each axis.)

1 word (channel) = 16 bits

n+0	F	E	D	C	B	A	9	8	7	6	5	4	3	2	1	0
Controller output port number	15	14	13	12	11	10	9	8	7	6	5	4	3	2	1	0

(3) I/O signal assignments

The signals assigned to the controller's I/O ports vary depending on the setting of parameter No. 25.
(For details, refer to the operation manual for the controller.)

ACON

		Setting of Parameter No. 25					
		Positioning mode		Teaching mode		256-point mode	
		0		1		2	
Category	Port No.	Signal name	Symbol	Signal name	Symbol	Signal name	Symbol
PLC output → ACON input	0	Command position number	PC1	Command position number	PC1	Command position number	PC1
	1		PC2		PC2		PC2
	2		PC4		PC4		PC4
	3		PC8		PC8		PC8
	4		PC16		PC16		PC16
	5		PC32		PC32		PC32
	6	Not available.	-	Teaching mode command	MODE		PC64
	7		-	Jog/inch switching	JISL		PC128
	8		-	+Jog	JOG+	Not available.	-
	9	Forced brake release	BKRL	-Jog	JOG-	Forced brake release	BKRL
	10	Operation mode	RMOD	Operation mode	RMOD	Operation mode	RMOD
	11	Home return	HOME	Home return	HOME	Home return	HOME
	12	Pause	*STP	Pause	*STP	Pause	*STP
	13	Positioning start	CSTR	Positioning start/position-data read command	CSTR/ PWRT	Positioning start	CSTR
	14	Reset	RES	Reset	RES	Reset	RES
	15	Servo ON command	SON	Servo ON command	SON	Servo ON command	SON
ACON output → PLC input	0	Completed position number	PM1	Completed position number	PM1	Completed position number	PM1
	1		PM2		PM2		PM2
	2		PM4		PM4		PM4
	3		PM8		PM8		PM8
	4		PM16		PM16		PM16
	5		PM32		PM32		PM32
	6	Moving signal	MOVE	Moving signal	MOVE		PM64
	7	Zone 1	ZONE1	Teaching mode signal	MODES		PM128
	8	Position zone	PZONE	Position zone	PZONE	Position zone	PZONE
	9	Operation mode status	RMDS	Operation mode status	RMDS	Operation mode status	RMDS
	10	Home return complete	HEND	Home return complete	HEND	Home return complete	HEND
	11	Position complete signal	PEND	Position complete signal/position-data read complete	PEND/ WEND	Position complete signal	PEND
	12	Ready	SV	Ready	SV	Ready	SV
	13	Emergency stop	*EMGS	Emergency stop	*EMGS	Emergency stop	*EMGS
	14	Alarm	*ALM	Alarm	*ALM	Alarm	*ALM
	15	Not available.	-	Not available.	-	Not available.	-

The signals indicated by * are ON in a normal state.
The signals denoted by "Not available" are not controlled (their ON/OFF status is indeterminable).

ACON

		Setting of Parameter No. 25					
		512-point mode		Solenoid mode 1		Solenoid mode 2	
		3		4		5	
Category	Port No.	Signal name	Symbol	Signal name	Symbol	Signal name	Symbol
PLC output → ACON input	0	Command position number	PC1	Start position 0	ST0	Start position 0	ST0
	1		PC2	Start position 1	ST1	Start position 1	ST1
	2		PC4	Start position 2	ST2	Start position 2	ST2
	3		PC8	Start position 3	ST3	Not available.	-
	4		PC16	Start position 4	ST4		-
	5		PC32	Start position 5	ST5		-
	6		PC64	Start position 6	ST6		-
	7		PC128	Not available.	-		-
	8		PC256		-		-
	9	Forced brake release	BKRL	Forced brake release	BKRT	Forced brake release	BKRL
	10	Operation mode	RMOD	Operation mode	RMOD	Operation mode	RMOD
	11	Home return	HOME	Home return	HOME	Not available.	-
	12	Pause	*STP	Pause	*STP		-
	13	Positioning start	CSTR	Not available.	-		-
	14	Reset	RES	Reset	RES	Reset	RES
	15	Servo ON command	SON	Servo ON command	SON	Servo ON command	SON
ACON output → PLC input	0	Completed position number	PM1	Position 0 complete	PE0	Rear end move command 0	LS0
	1		PM2	Position 1 complete	PE1	Rear end move command 1	LS1
	2		PM4	Position 2 complete	PE2	Rear end move command 2	LS2
	3		PM8	Position 3 complete	PE3	Not available.	-
	4		PM16	Position 4 complete	PE4		-
	5		PM32	Position 5 complete	PE5		-
	6		PM64	Position 6 complete	PE6		-
	7		PM128	Zone 1	ZONE1	Zone 1	ZONE1
	8		PM256	Position zone	PZONE	Position zone	PZONE
	9	Operation mode status	RMDS	Operation mode status	RMDS	Operation mode status	RMDS
	10	Home return complete	HEND	Home return complete	HEND	Home return complete	HEND
	11	Position complete signal	PEND	Position complete signal	PEND	Position complete signal	-
	12	Ready	SV	Ready	SV	Ready	SV
	13	Emergency stop	*EMGS	Emergency stop	*EMGS	Emergency stop	*EMGS
	14	Alarm	*ALM	Alarm	*ALM	Alarm	*ALM
	15	Not available.	-	Not available.	-	Not available.	-

The signals indicated by * are ON in a normal state.
The signals denoted by “Not available” are not controlled (their ON/OFF status is indeterminable).

PCON

		Setting of Parameter No. 25					
		Positioning mode (standard)		Teaching mode (teaching type)		256-point mode (256-point type)	
		0		1		2	
Category	Port No.	Signal name	Symbol	Signal name	Symbol	Signal name	Symbol
PLC output → PCON input	0	Command position number	PC1	Command position number	PC1	Command position number	PC1
	1		PC2		PC2		PC2
	2		PC4		PC4		PC4
	3		PC8		PC8		PC8
	4		PC16		PC16		PC16
	5		PC32		PC32		PC32
	6	Not available.	-	Teaching mode command (operation mode)	MODE		PC64
	7		-	Jog/inch switching	JISL		PC128
	8		-	+Jog	JOG+	Not available.	-
	9	Forced brake release	BKRL	-Jog	JOG-	Forced brake release	BKRL
	10	Operation mode	RMOD	Operation mode	RMOD	Operation mode	RMOD
	11	Home return	HOME	Home return	HOME	Home return	HOME
	12	Pause	*STP	Pause	*STP	Pause	*STP
	13	Positioning start	CSTR	Positioning start/position-data read command	CSTR/ PWRT	Positioning start	CSTR
	14	Reset	RES	Reset	RES	Reset	RES
	15	Servo ON command	SON	Servo ON command	SON	Servo ON command	SON
PCON output → PLC input	0	Completed position number	PM1	Completed position number	PM1	Completed position number	PM1
	1		PM2		PM2		PM2
	2		PM4		PM4		PM4
	3		PM8		PM8		PM8
	4		PM16		PM16		PM16
	5		PM32		PM32		PM32
	6	Moving signal	MOVE	Moving signal	MOVE		PM64
	7	Zone 1	ZONE1	Teaching mode signal	MODES		PM128
	8	Position zone	PZONE	Position zone	PZONE	Position zone	PZONE
	9	Operation mode status	RMDS	Operation mode status	RMDS	Operation mode status	RMDS
	10	Home return complete	HEND	Home return complete	HEND	Home return complete	HEND
	11	Position complete signal	PEND	Position complete signal/position-data read complete	PEND/ WEND	Position complete signal	PEND
	12	Ready	SV	Ready	SV	Ready	SV
	13	Emergency stop	*EMGS	Emergency stop	*EMGS	Emergency stop	*EMGS
	14	Alarm	*ALM	Alarm	*ALM	Alarm	*ALM
	15	Load output judgment/torque level	LOAD/ TRQS	Not available.	-	Load output judgment/torque level	LOAD/ TRQS

The signals indicated by * are ON in a normal state.
The signals denoted by “Not available” are not controlled (their ON/OFF status is indeterminable).

PCON

		Setting of Parameter No. 25					
		512-point mode		Solenoid mode 1		Solenoid mode 2	
		3		4		5	
Category	Port No.	Signal name	Symbol	Signal name	Symbol	Signal name	Symbol
PLC output → PCON input	0	Command position number	PC1	Start position 0	ST0	Start position 0	ST0
	1		PC2	Start position 1	ST1	Start position 1	ST1
	2		PC4	Start position 2	ST2	Start position 2	ST2
	3		PC8	Start position 3	ST3	Not available.	-
	4		PC16	Start position 4	ST4		-
	5		PC32	Start position 5	ST5		-
	6		PC64	Start position 6	ST6		-
	7		PC128	Not available.	-		-
	8		PC256		-		-
	9	Forced brake release	BKRL	Forced brake release	BKRT	Forced brake release	BKRL
	10	Operation mode	RMOD	Operation mode	RMOD	Operation mode	RMOD
	11	Home return	HOME	Home return	HOME	Not available.	-
	12	Pause	*STP	Pause	*STP		-
	13	Positioning start	CSTR	Not available.	-		-
	14	Reset	RES	Reset	RES	Reset	RES
	15	Servo ON command	SON	Servo ON command	SON	Servo ON command	SON
PCON output → PLC input	0	Completed position number	PM1	Position 0 complete	PE0	Rear end move command 0	LS0
	1		PM2	Position 1 complete	PE1	Rear end move command 1	LS1
	2		PM4	Position 2 complete	PE2	Rear end move command 2	LS2
	3		PM8	Position 3 complete	PE3	Not available.	-
	4		PM16	Position 4 complete	PE4		-
	5		PM32	Position 5 complete	PE5		-
	6		PM64	Position 6 complete	PE6		-
	7		PM128	Zone 1	ZONE1	Zone 1	ZONE1
	8		PM256	Position zone	PZONE	Position zone	PZONE
	9	Operation mode status	RMDS	Operation mode status	RMDS	Operation mode status	RMDS
	10	Home return complete	HEND	Home return complete	HEND	Home return complete	HEND
	11	Position complete signal	PEND	Position complete signal	PEND	Position complete signal	-
	12	Ready	SV	Ready	SV	Ready	SV
	13	Emergency stop	*EMGS	Emergency stop	*EMGS	Emergency stop	*EMGS
	14	Alarm	*ALM	Alarm	*ALM	Alarm	*ALM
	15	Load output judgment/torque level	LOAD/ TRQS	Load output judgment/torque level	LOAD/ TRQS	Not available.	---

The signals indicated by * are ON in a normal state.
The signals denoted by “Not available” are not controlled (their ON/OFF status is indeterminable).

7.7.3 Position/Simple Direct Mode (Number of Occupied Channels: 4)

In this mode, the actuator is operated by specifying position numbers. You can switch the control signal (PMOD) to select whether to specify the target position directly and numerically or by using a value registered in the position data table.
Data other than the target position, such as speed, acceleration/deceleration and positioning band, are set using values in the position table stored in the controller. Set position data by referring to the operation manual for the controller.
Up to 768 sets of positioning data can be specified.
The key ROBO Cylinder functions that can be controlled in this mode are summarized in the table below.

ROBO Cylinder function	○: Direct control △: Indirect control X: Invalid	Remarks
Home-return operation	○	These items must be set in the position data table.
Positioning operation	○	
Speed and acceleration/deceleration setting	△	
Pitch feed (inching)	△	
Push-motion operation	△	
Speed change during movement	△	
Operation at different acceleration and deceleration	△	
Pause	○	
Zone signal output	△	Zones are set using parameters.
PIO pattern selection	X	

(1) PLC channel configuration (* n indicates the node address of each axis.)

Parameter No. 84	ACON/PCON input register	PLC output channel	ACON/PCON output register	PLC input channel
1	Target position	n+0	Current position	n+0
		n+1		n+1
	Specified position number	n+2	Completed position number (simple alarm code)	n+2
	Control signal	n+3	Status signal	n+3

(Note) Exercise caution to avoid node address duplication.

(2) I/O signal assignments for each axis

The I/O signals of each axis consist of four input words (channels) and four output words (channels) in the I/O areas.

- Control signals and status signals are ON/OFF bit signals.
- The target position and current position are 2-word (32-bit) binary data. Although values from -999999 to +999999 (unit: 0.01 mm) can be handled by the PLC for these items, set position data within the soft stroke range (0 to the effective stroke) of the applicable actuator.
- The specified position number and completed position number are 1-word (16-bit) binary data. Although values from 0 to 767 can be handled by the PLC for these items, use the PC software or teaching pendant to specify position numbers associated with predefined operating conditions.

PLC output
Channel (* n indicates the node address of each axis.)

1 word (channel) = 16 bits

n+0	b15	b14	b13	b12	b11	b10	b9	b8	b7	b6	b5	b4	b3	b2	b1	b0
Target position (lower word)																

n+1	b15	b14	b13	b12	b11	b10	b9	b8	b7	b6	b5	b4	b3	b2	b1	b0
Target position (upper word)																

If the target position is a negative value, it is indicated by a 2's complement.

n+2	b15	b14	b13	b12	b11	b10	b9	b8	b7	b6	b5	b4	b3	b2	b1	b0
Specified position number	—	—	—	—	—	—	PC512	PC256	PC128	PC64	PC32	PC16	PC8	PC4	PC2	PC1

n+3	b15	b14	b13	b12	b11	b10	b9	b8	b7	b6	b5	b4	b3	b2	b1	b0
Control signal	BKRL	RMOD	—	—	PMOD	MODE	PWRT	JOG+	JOG−	JVEL	JISL	SON	RES	STP	HOME	CSTR

PLC input
Channel (* n indicates the node address of each axis.)

1 word (channel) = 16 bits

n+0	b15	b14	b13	b12	b11	b10	b9	b8	b7	b6	b5	b4	b3	b2	b1	b0
Current position (lower word)																

n+1	b15	b14	b13	b12	b11	b10	b9	b8	b7	b6	b5	b4	b3	b2	b1	b0
Current position (upper word)																

If the current position is a negative value, it is indicated by a 2's complement.

n+2	b15	b14	b13	b12	b11	b10	b9	b8	b7	b6	b5	b4	b3	b2	b1	b0
Completed position number	—	—	—	—	—	—	PM512	PM256	PM128	PM64	PM32	PM16	PM8	PM4	PM2	PM1

n+3	b15	b14	b13	b12	b11	b10	b9	b8	b7	b6	b5	b4	b3	b2	b1	b0
Status signal	EMGS	PWR	ZONE1	ZONE2	PZONE	MODES	WEND	RMDS	—	—	PSFL	SV	ALM	MOVE	HEND	PEND

(3) I/O signal assignments

(* In the table, ON indicates that the applicable bit is “1,” while OFF indicates that the bit is “0.”)

Signal type		Bits	Symbol	Description	Details
PLC output	Target position	32-bit data	-	32-bit signed integer. Specify the target position as a position in the absolute coordinate system. The setting unit is 0.01 mm and the allowable specification range is -999999 to 999999. (Example) To set “+25.40 mm,” specify “2540.” If the entered value exceeds the range between the soft limits (0.2 mm inside the limits) set by the parameters, the movement will be limited to the soft limit (0.2 mm inside the limit). * If target positions are entered as hexadecimals, enter negative values using 2’s complements.	7.9 (1)
	Specified position number	16-bit data	PC1 ~ PC512	16-bit integer. To operate the actuator, you must set position data associated with predefined operating conditions using the PC software or teaching pendant. Use one of these registers to specify the position number for which the desired data has been input. The allowable specification range is 0 to 767. If the specified value is outside the above range or corresponds to a position not yet set, an alarm will occur when the start signal is turned ON.	7.9 (1)
	Control signal	b15	BKRL	Forced brake release: The brake is released when this signal turns ON.	7.7.7 (18)
		b14	RMOD	Operation mode: The AUTO mode is selected when this signal is OFF, and the MANU mode is selected when the signal is ON.	7.7.7 (19)
		b13	-	Not available.	-
		b12			
		b11	PMOD	Position/simple-direct switching: The position mode is selected when this signal is OFF, and the simple direct mode is selected when the signal is ON.	7.7.7 (20)
		b10	MODE	Teaching mode command: The normal mode is selected when this signal is OFF, and the teaching mode is selected when the signal is ON.	7.7.7 (16)
		b9	PWRT	Position-data read command: Position data is read when this signal is ON.	7.7.7 (17)
		b8	JOG+	+Jog: The actuator moves in the direction opposite home when this signal is ON.	7.7.7 (13)
		b7	JOG-	-Jog: The actuator moves in the direction of home when this signal is ON.	7.7.7 (13)
		b6	JVEL	Jog-speed/inch-distance switching: The values set in parameter No. 26, “Jog speed” and parameter No. 48, “Inch distance” are used when this signal is OFF, and the values set in parameter No. 47, “Jog speed 2” and parameter No. 49, “Inch distance 2” are used when the signal is ON.	7.7.7 (14)
		b5	JISL	Jog/inch switching: Jog operation is performed when this signal is OFF, and inch operation is performed when the signal is ON.	7.7.7 (15)
		b4	SON	Servo ON command: The servo turns ON when this signal turns ON.	7.7.7 (5)
		b3	RES	Reset: A reset is performed when this signal turns ON.	7.7.7 (4)
		b2	STP	Pause: A pause command is issued when this signal turns ON.	7.7.7 (11)
		b1	HOME	Home return: A home-return command is issued when this signal turns ON.	7.7.7 (6)
		b0	CSTR	Positioning start: A move command is issued when this signal turns ON.	7.7.7 (7)

(* In the table, ON indicates that the applicable bit is “1,” while OFF indicates that the bit is “0.”)

Signal type		Bits	Symbol	Description	Details
PLC input	Current position	32 bits	-	32-bit signed integer indicating the current position. The setting unit is 0.01 mm. (Example) Reading: 000003FFH = 1023 (decimal) = 10.23 mm * If current positions are read as hexadecimals, negative values are indicated by 2’s complements.	7.9 (1)
	Completed position number (simple alarm code)	16 bits	PM 1 ~ PM512	16-bit integer. When the actuator has moved to the target position and entered the positioning band, the position number corresponding to the completed position is output. “0” is output when no position movement has been performed yet or while the actuator is moving. If an alarm occurs (the status signal ALM turns ON), a corresponding simple alarm code (refer to the operation manual for the controller) will be output.	7.9 (1)
	Status code	b15	EMGS	Emergency stop: An emergency stop is actuated when this signal turns ON.	7.7.7 (2)
		b14	PWR	Controller ready: This signal turns ON when the controller becomes ready.	7.7.7 (1)
		b13	ZONE2	Zone 2: This signal turns ON when the current position is inside the specified zone.	7.7.7 (12)
		b12	ZONE1	Zone 1: This signal turns ON when the current position is inside the specified zone.	7.7.7 (12)
		b11	PZONE	Position zone: This signal turns ON when the current position is inside the specified position zone.	7.7.7 (12)
		b10	MODES	Teaching mode signal: This signal is ON while the teaching mode is selected.	7.7.7 (16)
		b9	WEND	Position data read complete: This signal turns ON when reading is complete.	7.7.7 (17)
		b8	RMDS	Operation mode status: This signal is OFF when the current mode is AUTO, or ON when the current mode is MANU.	7.7.7 (19)
		b7	-	Not available.	-
		b6			
		b5	PSFL	Load missed in push motion: This signal turns ON when the actuator missed the load in push-motion operation.	7.7.7 (23)
		b4	SV	Ready: This signal turns ON when the servo turns ON.	7.7.7 (5)
		b3	ALM	Alarm: This signal turns ON when an alarm occurs.	7.7.7 (3)
		b2	MOVE	Moving signal: This signal remains ON while the actuator is moving.	7.7.7 (9)
		b1	HEND	Home return complete: This signal turns ON when home return is completed.	7.7.7 (6)
		b0	PEND	Position complete signal: This signal turns ON when positioning is completed.	7.7.7 (10)

7.7.4 Half Direct Mode (Number of Occupied Channels: 8)

In this mode, the target position, positioning band, speed, acceleration/deceleration and push-motion current are specified directly and numerically from the PLC.
Set each value in the I/O areas. To use the zone function, set appropriate values in parameter Nos. 1, 2, 23 and 24.
The key ROBO Cylinder functions that can be controlled in this mode are summarized in the table below.

ROBO Cylinder function	○: Direct control △: Indirect control X: Invalid	Remarks
Home-return operation	○	
Positioning operation	○	.
Speed and acceleration/deceleration setting	○	
Pitch feed (inching)	○	
Push-motion operation	○	
Speed change during movement	○	
Operation at different acceleration and deceleration	X	
Pause	○	.
Zone signal output	△	Parameters must be set
PIO pattern selection	X	

(1) PLC channel configuration (* n indicates the node address of each axis.)

Parameter No. 84	ACON/PCON input register	PLC output channel	ACON/PCON output register	PLC input channel
2	Target position	n+0	Current position	n+0
		n+1		n+1
	Positioning band	n+2	Command current	n+2
		n+3		n+3
	Speed	n+4	Current speed	n+4
	Acceleration/ deceleration	n+5		n+5
	Push-motion current-limiting value	n+6	Alarm code	n+6
	Control signal	n+7	Status signal	n+7

(Note) Exercise caution to avoid node address duplication.

(2) I/O signal assignments for each axis

The I/O signals of each axis consist of eight input words (channels) and eight output words (channels) in the I/O areas.

- Control signals and status signals are ON/OFF bit signals.
- The target position and current position are 2-word (32-bit) binary data. Although values from -999999 to +999999 (unit: 0.01 mm) can be handled by the PLC for these items, set position data within the soft stroke range (0 to the effective stroke) of the applicable actuator.
- Specify the positioning band. The positioning band is a 2-word (32-bit) binary data. For the positioning band, the PLC can handle values from 1 to +999999 (unit: 0.01 mm).
- The specified speed is a 1-word (16-bit) binary data. For the specified speed, the PLC can handle values from 0 to +65535 (unit: 1.0 mm/sec). Take note, however, that the set value should not exceed the maximum speed supported by the applicable actuator.
- The acceleration/deceleration is a 1-word (16-bit) binary data. For the acceleration/deceleration, the PLC can handle values from 1 to 300 (unit: 0.01 G). Take note, however, that the set value should not exceed the maximum acceleration or maximum deceleration supported by the applicable actuator.
- The push-motion current-limiting value is a 1-word (16-bit) binary data. For the push-motion current-limiting value, the PLC can handle values from 0 (0%) to 255 (100%). Take note, however, that the setting should be inside the allowable specification range of push-motion current-limiting values supported by the applicable actuator (refer to the catalog or operation manual for the actuator).

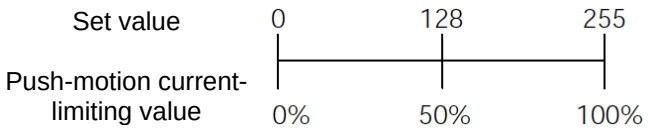

- The command current is a 2-word (32-bit) binary data (unit: 1 mA).
- The current speed is a 2-word (32-bit) binary data (unit: 0.01 mm/sec).
- The alarm code is a 1-word (16-bit) binary data.

PLC output
Channel (* n indicates the node address of each axis.)

1 word (channel) = 16 bits

n+0	b15	b14	b13	b12	b11	b10	b9	b8	b7	b6	b5	b4	b3	b2	b1	b0
Target position (lower word)																

n+1	b15	b14	b13	b12	b11	b10	b9	b8	b7	b6	b5	b4	b3	b2	b1	b0
Target position (upper word)																

If the target position is a negative value, it is indicated by a 2's complement.

n+2	b15	b14	b13	b12	b11	b10	b9	b8	b7	b6	b5	b4	b3	b2	b1	b0
Positioning band (lower word)	32,768	16,384	8,192	4,096	2,048	1,024	512	256	128	64	32	16	8	4	2	1

n+3	b15	b14	b13	b12	b11	b10	b9	b8	b7	b6	b5	b4	b3	b2	b1	b0
Positioning band (upper word)	—	—	—	—	—	—	—	—	—	—	—	—	524,288	262,144	131,072	65,536

n+4	b15	b14	b13	b12	b11	b10	b9	b8	b7	b6	b5	b4	b3	b2	b1	b0
Speed	32,768	16,384	8,192	4,096	2,048	1,024	512	256	128	64	32	16	8	4	2	1

n+5	b15	b14	b13	b12	b11	b10	b9	b8	b7	b6	b5	b4	b3	b2	b1	b0
Acceleration/ deceleration	—	—	—	—	—	—	—	256	128	64	32	16	8	4	2	1

n+6	b15	b14	b13	b12	b11	b10	b9	b8	b7	b6	b5	b4	b3	b2	b1	b0
Push-motion current-limiting value	—	—	—	—	—	—	—	—	128	64	32	16	8	4	2	1

n+7	b15	b14	b13	b12	b11	b10	b9	b8	b7	b6	b5	b4	b3	b2	b1	b0
Control signal	BKRL	RMOD	DIR	PUSH	—	—	—	JOG+	JOG−	JVEL	JISL	SON	RES	STP	HOME	DSTR

PLC input
Channel (* n indicates the node address of each axis.)

1 word (channel) = 16 bits

n+0	b15	b14	b13	b12	b11	b10	b9	b8	b7	b6	b5	b4	b3	b2	b1	b0
Current position (lower word)																

n+1	b15	b14	b13	b12	b11	b10	b9	b8	b7	b6	b5	b4	b3	b2	b1	b0
Current position (upper word)																

If the current position is a negative value, it is indicated by a 2's complement.

n+2	b15	b14	b13	b12	b11	b10	b9	b8	b7	b6	b5	b4	b3	b2	b1	b0
Command current (lower word)	32,768	16,384	8,192	4,096	2,048	1,024	512	256	128	64	32	16	8	4	2	1

n+3	b15	b14	b13	b12	b11	b10	b9	b8	b7	b6	b5	b4	b3	b2	b1	b0
Command current (upper word)	—	—	—	—	—	—	—	—	—	—	—	—	524,288	262,144	131,072	65,536

n+4	b15	b14	b13	b12	b11	b10	b9	b8	b7	b6	b5	b4	b3	b2	b1	b0
Current speed (lower word)																

n+5	b15	b14	b13	b12	b11	b10	b9	b8	b7	b6	b5	b4	b3	b2	b1	b0
Current speed (upper word)																

If the current speed is a negative value, it is indicated by a 2's complement.

n+6	b15	b14	b13	b12	b11	b10	b9	b8	b7	b6	b5	b4	b3	b2	b1	b0
Alarm code																

n+7	b15	b14	b13	b12	b11	b10	b9	b8	b7	b6	b5	b4	b3	b2	b1	b0
Status signal	EMGS	PWR	ZONE2	ZONE1	—	—	—	RMDS	—	—	PSFL	SV	ALM	MOVE	HEND	PEND

(3) I/O signal assignments

(* In the table, ON indicates that the applicable bit is “1,” while OFF indicates that the bit is “0.”)

Signal type		Bits	Symbol	Description	Details
PLC output	Target position	32-bit data	-	32-bit signed integer. Specify the target position as a position in the absolute coordinate system. The setting unit is 0.01 mm and the allowable specification range is -999999 to 999999. (Example) To set “+25.41 mm,” specify “2541.” If the entered value exceeds the range between the soft limits (0.2 mm inside the limits) set by the parameters, the movement will be limited to the soft limit (0.2 mm inside the limit). * If target positions are entered as hexadecimals, enter negative values using 2’s complements.	7.9 (2)
	Positioning band	32-bit data	-	32-bit integer. The setting unit is 0.01 mm and the allowable specification range is 1 to 999999. (Example) To set “+25.40 mm,” specify “2540.” This register has one of two meanings depending on the operation type. [1] In positioning operation, this register defines the permissible range from the target position in which positioning will be deemed to have completed. [2] In push-motion operation, this register defines the push-motion band. Whether to perform normal operation or push-motion operation is set using the control signal PUSH.	7.9 (2)
	Speed	16-bit data	-	16-bit integer. Specify the speed at which to move the actuator. The setting unit is 1.0 mm/sec and the allowable specification range is 0 to 65535. (Example) To set “254.0 mm/sec,” specify “254.” If a move command is issued by specifying a value exceeding the maximum speed, an alarm will occur.	7.9 (2)
	Acceleration/ deceleration	16-bit data	-	16-bit integer. Specify the acceleration/deceleration at which to move the actuator (the acceleration and deceleration will be the same value). The setting unit is 0.01 G and the allowable specification range is 1 to 300. (Example) To set “0.30 G,” specify “30.” If a move command is issued by specifying “0” or any value exceeding the maximum acceleration or deceleration, an alarm will occur.	7.9 (2)

(* In the table, ON indicates that the applicable bit is “1,” while OFF indicates that the bit is “0.”)

Signal type		Bits	Symbol	Description	Details
PLC output	Push-motion current-limiting value	16-bit data	-	16-bit integer. Specify the current-limiting value to be used during push-motion operation. The allowable specification range is 0 (0%) to 255 (100%). The actual allowable specification range varies from one actuator to another. (Refer to the catalog or operation manual for each actuator.) If a move command is issued by specifying a value exceeding the maximum push-motion current, an alarm will occur.	7.9 (2)
	Control signal	b15	BKRL	Forced brake release: The brake is released when this signal turns ON.	7.7.7 (18)
		b14	RMOD	Operation mode: The AUTO mode is selected when this signal is OFF, and the MANU mode is selected when the signal is ON.	7.7.7 (19)
		b13	DIR	Push direction specification: When this signal is OFF, push-motion operation is performed in the direction of the position determined by subtracting the positioning band from the target position. When the signal is ON, push-motion operation is performed in the direction of the position determined by adding the positioning band to the target position.	7.7.7 (22)
		b12	PUSH	Push-motion specification: Positioning operation is performed when this signal is OFF, and push-motion operation is performed when the signal is ON.	7.7.7 (21)
		b11	-	Not available.	-
		b10			
		b9			
		b8	JOG+	+Jog: The actuator moves in the direction opposite home when this signal is ON.	7.7.7 (13)
		b7	JOG-	-Jog: The actuator moves in the direction of home when this signal is ON.	7.7.7 (13)
		b6	JVEL	Jog-speed/inch-distance switching: The values set in parameter No. 26, “Jog speed” and parameter No. 48, “Inch distance” are used when this signal is OFF, and the values set in parameter No. 47, “Jog speed 2” and parameter No. 49, “Inch distance 2” are used when the signal is ON.	7.7.7 (14)
		b5	JISL	Jog/inch switching: Jog operation is performed when this signal is OFF, and inch operation is performed when the signal is ON.	7.7.7 (15)
		b4	SON	Servo ON command: The servo turns ON when this signal turns ON.	7.7.7 (5)
		b3	RES	Reset: A reset is performed when this signal turns ON.	7.7.7 (4)
		b2	STP	Pause: A pause command is issued when this signal turns ON.	7.7.7 (11)
		b1	HOME	Home return: A home-return command is issued when this signal turns ON.	7.7.7 (6)
		b0	DSTR	Positioning start: A move command is issued when this signal turns ON.	7.7.7 (8)

(* In the table, ON indicates that the applicable bit is “1,” while OFF indicates that the bit is “0.”)

Signal type		Bits	Symbol	Description	Details
PLC input	Current position	32-bit data	-	32-bit signed integer indicating the current position. The setting unit is 0.01 mm. (Example) Reading: 000003FFH = 1023 (decimal) = 10.23 mm * If current positions are read as hexadecimals, negative values are indicated by 2’s complements.	7.9 (2)
	Command current	32-bit data	-	32-bit integer. The electrical current presently specified by a command is indicated. The setting unit is mA. (Example) Reading: 000003FFH = 1023 (decimal) = 1023 mA	7.9 (2)
	Current speed	32-bit data	-	32-bit signed integer. Indicate the current speed. Positive value: The actuator is moving in the direction opposite home. Negative value: The actuator is moving in the direction of home. 32-bit integer. The current speed is indicated. The setting unit is 0.01 mm/sec. (Example) Reading: 000003FFH = 1023 (decimal) = 10.23 mm/sec * If this data is read as a hexadecimal, a negative value is indicated as a 2’s complement.	7.9 (2)
	Alarm code	16-bit data	-	16-bit integer. If an alarm occurred, a corresponding alarm code is output. If no alarm is present, “0H” is set. For details on alarms, refer to the operation manual for the controller.	7.9 (2)
	Status code	b15	EMGS	Emergency stop: An emergency stop is actuated when this signal turns ON.	7.7.7 (2)
		b14	PWR	Controller ready: This signal turns ON when the controller becomes ready.	7.7.7 (1)
		b13	ZONE2	Zone 2: This signal turns ON when the current position is inside the specified zone.	7.7.7 (12)
		b12	ZONE1	Zone 1: This signal turns ON when the current position is inside the specified zone.	7.7.7 (12)
		b11	-	Not available.	-
		b10			
		b9			
		b8	RMDS	Operation mode status: This signal is OFF when the current mode is AUTO, or ON when the current mode is MANU.	7.7.7 (19)
		b7	-	Not available.	-
		b6			
		b5	PSFL	Load missed in push motion: This signal turns ON when the actuator missed the load in push-motion operation.	7.7.7 (23)
		b4	SV	Ready: This signal turns ON when the servo turns ON.	7.7.7 (5)
		b3	ALM	Alarm: This signal turns ON when an alarm occurs.	7.7.7 (3)
		b2	MOVE	Moving signal: This signal remains ON while the actuator is moving.	7.7.7 (9)
		b1	HEND	Home return complete: This signal turns ON when home return is completed.	7.7.7 (6)
		b0	PEND	Position complete signal: This signal turns ON when positioning is completed.	7.7.7 (10)

7.7.5 Full Direct Mode (Number of Occupied Channels: 16)

In this mode, the actuator is operated by specifying all values relating to positioning control (target position, speed, etc.) directly from the PLC.
Set each value in the I/O area.
The key ROBO Cylinder functions that can be controlled in this mode are summarized in the table below.

ROBO Cylinder function	○: Direct control X: Invalid
Home-return operation	○
Positioning operation	○
Speed and acceleration/deceleration setting	○
Pitch feed (inching)	○
Push-motion operation	○
Speed change during movement	○
Operation at different acceleration and deceleration	○
Pause	○
Zone signal output	○
PIO pattern selection	X

(1) PLC channel configuration (* n indicates the node address of each axis.)

Parameter No. 84	ACON/PCON input register		PLC output channel	ACON/PCON output register	PLC input channel
3	Target position		n+0	Current position	n+0
			n+1		n+1
	Positioning band		n+2	Command current	n+2
			n+3		n+3
	Speed		n+4	Current speed	n+4
			n+5		n+5
	Zone boundary+		n+6	Alarm code	n+6
			n+7	Occupied area	n+7
	Zone boundary-		n+8		n+8
			n+9		n+9
	Acceleration		n+10		n+10
	Deceleration		n+11		n+11
	Push-motion current-limiting value		n+12		n+12
	ACON	Occupied area	n+13		n+13
	PCON	Load current threshold			
	Control signal 1		n+14		n+14
	Control signal 2		n+15	Status signal	n+15

(Note) The areas denoted by “occupied area” cannot be used for any other purpose. Also exercise caution to avoid node address duplication.

(2) I/O signal assignments for each axis

The I/O signals of each axis consist of sixteen input words (channels) and sixteen output words (channels) in the I/O areas.

- Control signals 1 and 2 and status signals are ON/OFF bit signals.
- The target position and current position are 2-word (32-bit) binary data. Although values from -999999 to +999999 (unit: 0.01 mm) can be handled by the PLC for these items, set position data within the soft stroke range (0 to the effective stroke) of the applicable actuator.
- Specify the positioning band. The positioning band is a 2-word (32-bit) binary data. For the positioning band, the PLC can handle values from 1 to +999999 (unit: 0.01 mm).
- The specified speed is a 2-word (32-bit) binary data. For the specified speed, the PLC can handle values from 0 to +999999 (unit: 0.01 mm/sec). Take note, however, that the set value should not exceed the maximum speed supported by the applicable actuator.
- The acceleration/deceleration is a 1-word (16-bit) binary data. For the acceleration/deceleration, the PLC can handle values from 1 to 300 (unit: 0.01 G). Take note, however, that the set value should not exceed the maximum acceleration or maximum deceleration supported by the applicable actuator.
- The push-motion current-limiting value is a 1-word (16-bit) binary data. For the push-motion current-limiting value, the PLC can handle values from 0 (0%) to 255 (100%). Take note, however, that the setting should be inside the allowable specification range of push-motion current-limiting values supported by the applicable actuator (refer to the catalog or operation manual for the actuator).

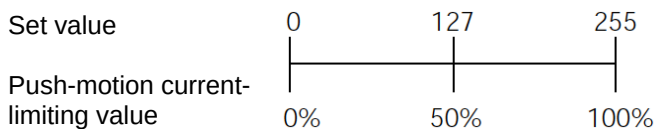

- Set the load current threshold. The load current threshold is a 1-word (16-bit) binary data. For the load current threshold, the PLC can handle values from 0 (0%) to 255 (100%). (Refer to the graph of push-motion current-limiting value (above graph).)
- The zone boundary+ and zone boundary- are 2-word (32-bit) binary data. For the zone boundary+ and zone boundary-, the PLC can handle values from -999999 to +999999 (unit: 0.01 mm). Take note, however, that the value of zone boundary- must be smaller than the value of zone boundary+.
- The command current is a 2-word (32-bit) binary data (unit: 1 mA).
- The current speed is a 2-word (32-bit) binary data (unit: 0.01 mm/sec).
- The alarm code is a 1-word (16-bit) binary data.

PLC output
Channel (* n indicates the node address of each axis.)

1 word (channel) = 16 bits

	b15	b14	b13	b12	b11	b10	b9	b8	b7	b6	b5	b4	b3	b2	b1	b0
n+0																
Target position (lower word)																
n+1																
Target position (upper word)																

If the target position is a negative value, it is indicated by a 2's complement.

	b15	b14	b13	b12	b11	b10	b9	b8	b7	b6	b5	b4	b3	b2	b1	b0
n+2																
Positioning band (lower word)	32,768	16,384	8,192	4,096	2,048	1,024	512	256	128	64	32	16	8	4	2	1
n+3																
Positioning band (upper word)	—	—	—	—	—	—	—	—	—	—	—	—	524,288	262,144	131,072	65,536
n+4																
Speed (lower word)	32,768	16,384	8,192	4,096	2,048	1,024	512	256	128	64	32	16	8	4	2	1
n+5																
Speed (upper word)	—	—	—	—	—	—	—	—	—	—	—	—	524,288	262,144	131,072	65,536
n+6																
Zone boundary+ (lower word)																
n+7																
Zone boundary+ (upper word)																

If the zone boundary is a negative value, it is indicated by a 2's complement.

Channel (* n indicates the node address of each axis.)

1 word (channel) = 16 bits

n+8	b15	b14	b13	b12	b11	b10	b9	b8	b7	b6	b5	b4	b3	b2	b1	b0
Zone boundary-(lower word)																

n+9	b15	b14	b13	b12	b11	b10	b9	b8	b7	b6	b5	b4	b3	b2	b1	b0
Zone boundary-(upper word)																

If the zone boundary is a negative value, it is indicated by a 2's complement.

n+10	b15	b14	b13	b12	b11	b10	b9	b8	b7	b6	b5	b4	b3	b2	b1	b0
Acceleration								256	128	64	32	16	8	4	2	1

n+11	b15	b14	b13	b12	b11	b10	b9	b8	b7	b6	b5	b4	b3	b2	b1	b0
Deceleration								256	128	64	32	16	8	4	2	1

n+12	b15	b14	b13	b12	b11	b10	b9	b8	b7	b6	b5	b4	b3	b2	b1	b0
Push-motion current-limiting value									128	64	32	16	8	4	2	1

n+13	b15	b14	b13	b12	b11	b10	b9	b8	b7	b6	b5	b4	b3	b2	b1	b0
Load current threshold (*3)									128	64	32	16	8	4	2	1

n+14	b15	b14	b13	b12	b11	b10	b9	b8	b7	b6	b5	b4	b3	b2	b1	b0
Control signal 1						(※1)			(※2)				INC	DIR	PUSH	

n+15	b15	b14	b13	b12	b11	b10	b9	b8	b7	b6	b5	b4	b3	b2	b1	b0
Control signal 2	BKRL	RMOD						JOG+	JOG−	JVEL	JISL	SON	RES	STP	HOME	DSTR

(*1) Signal assignment for b10 of n+14

	Symbol	
Controller	ACON	PCON
b10	-	SMOD

(*2) Signal assignments for b7 and b6 of n+14

	Symbol	
Controller	ACON	PCON
b7	MOD1	-
b6	MOD0	-

(*3) This is a dedicated function for PCON controllers. It is not available with ACON controllers.

PLC input
Channel (* n indicates the node address of each axis.)

1 word (channel) = 16 bits

n+0	b15	b14	b13	b12	b11	b10	b9	b8	b7	b6	b5	b4	b3	b2	b1	b0
Current position (lower word)																

n+1	b15	b14	b13	b12	b11	b10	b9	b8	b7	b6	b5	b4	b3	b2	b1	b0
Current position (upper word)																

If the current position is a negative value, it is indicated by a 2's complement.

n+2	b15	b14	b13	b12	b11	b10	b9	b8	b7	b6	b5	b4	b3	b2	b1	b0
Command current (lower word)	32,768	16,384	8,192	4,096	2,048	1,024	512	256	128	64	32	16	8	4	2	1

n+3	b15	b14	b13	b12	b11	b10	b9	b8	b7	b6	b5	b4	b3	b2	b1	b0
Command current (upper word)	—	—	—	—	—	—	—	—	—	—	—	—	524,288	262,144	131,072	65,536

n+4	b15	b14	b13	b12	b11	b10	b9	b8	b7	b6	b5	b4	b3	b2	b1	b0
Current speed (lower word)																

n+5	b15	b14	b13	b12	b11	b10	b9	b8	b7	b6	b5	b4	b3	b2	b1	b0
Current speed (upper word)																

If the current speed is a negative value, it is indicated by a 2's complement.

n+6	b15	b14	b13	b12	b11	b10	b9	b8	b7	b6	b5	b4	b3	b2	b1	b0
Alarm code																

n+7～n+14	b15	b14	b13	b12	b11	b10	b9	b8	b7	b6	b5	b4	b3	b2	b1	b0
Not available.																

n+15	b15	b14	b13	b12	b11	b10	b9	b8	b7	b6	b5	b4	b3	b2	b1	b0
Status signal	EMGS	PWR	ZONE2	ZONE1	PZONE	(※1)		RMDS	GHMS	PUSH	PSFL	SV	ALM	MOVE	HEND	PEND

(*1) Signal assignments for b10 and b9 of n+15

	Symbol	
Controller	ACON	PCON
b10	-	LOAD
b9	-	TRQS

(3) I/O signal assignments

(* In the table, ON indicates that the applicable bit is “1,” while OFF indicates that the bit is “0.”)

Address		Bits	Symbol	Function	Details
PLC output	Target position	32-bit data	-	32-bit signed integer. Specify the target position as a position in the absolute coordinate system. The setting unit is 0.01 mm and the allowable specification range is -999999 to 999999. (Example) To set “+25.41 mm,” specify “2541.” If the entered value exceeds the range between the soft limits (0.2 mm inside the limits) set by the parameters, the movement will be limited to the soft limit (0.2 mm inside the limit). * If target positions are entered as hexadecimals, enter negative values using 2’s complements.	7.9 (3)
	Positioning band	32-bit data	-	32-bit integer. The setting unit is 0.01 mm and the allowable specification range is 1 to 999999. (Example) To set “+25.40 mm,” specify “2540.” This register has one of two meanings depending on the operation type. [1] In positioning operation, this register defines the permissible range from the target position in which positioning will be deemed to have completed. [2] In push-motion operation, this register defines the push-motion band. Whether to perform normal operation or push-motion operation is set using the control signal PUSH.	7.9 (3)
	Speed	32-bit data	-	32-bit integer. Specify the speed at which to move the actuator. The setting unit is 1.0 mm/sec and the allowable specification range is 0 to 999999. (Example) To set “25.41 mm/sec,” specify “2541.” If a move command is issued by specifying a value exceeding the maximum speed, an alarm will occur.	7.9 (3)
	Zone boundary+ /zone boundary-	32-bit data	-	32-bit signed integer. After completion of home return, an effective zone signal can be output separately from the zone boundaries specified by parameters. The status signal PZONE turns ON when the current position is inside these +/- boundaries. (Example) To set “+25.40 mm,” specify “2540.” The setting unit is 0.01 mm and the specification range is -999999 to 999999. Enter a value that satisfies the relationship of “Zone boundary+ > Zone boundary-.” If this function is not used, enter the same value for both the positive and negative boundaries. * If the boundaries are entered as hexadecimals, enter negative values using 2’s complements.	7.9 (3)

(* In the table, ON indicates that the applicable bit is “1,” while OFF indicates that the bit is “0.”)

Address		Bits	Symbol		Function	Details
PLC output	Acceleration	16-bit data	-		16-bit integer. Specify the acceleration and deceleration at which to move the actuator. The setting unit is 0.01 G and the allowable specification range is 1 to 300. (Example) To set “0.30 G,” specify “30.” If a move command is issued by specifying “0” or any value exceeding the maximum acceleration or deceleration, an alarm will occur.	7.9 (3)
	Deceleration	16-bit data	-			
	Push-motion current-limiting value	16-bit data	-		16-bit integer. Specify the current-limiting value to be used during push-motion operation. The allowable specification range is 0 (0%) to 255 (100%). The actual allowable specification range varies from one actuator to another. (Refer to the catalog or operation manual for each actuator.) If a move command is issued by specifying a value exceeding the maximum push-motion current, an alarm will occur.	7.9 (3)
	Load current threshold	16-bit data	-		16-bit integer. If you want the controller to determine whether or not the load current has exceeded the set value, specify the current threshold using this register. The allowable specification range is 0 (0%) to 255 (100%). If threshold judgment is not required, enter “0.”	7.9 (3)
	Control signal 1	b15	-		Not available.	-
		b14				
		b13				
		b12				
		b11				
		b10	ACON	-	Not available.	-
			PCON	SMOD	Stopping control mode: When this signal is ON, servo control is performed during stopping.	7.7.7 (28)
		b9	-		Not available.	-
		b8				
		b7	ACON	MOD1	Acceleration/deceleration mode: When both signals are OFF, the trapezoid pattern mode is selected. When one signal is OFF and the other signal is ON, the S-motion mode is selected. When one signal is ON and the other signal is OFF, the primary delay filter mode is selected.	7.7.7 (29)
		b6		MOD0		
		b7	PCON	-	Not available.	-
		b6				
		b5	-		Not available.	-
		b4				
		b3	INC		Incremental specification: Absolute position commands are issued when this signal is OFF, and incremental position commands are issued when the signal is ON.	7.7.7 (24)

(* In the table, ON indicates that the applicable bit is “1,” while OFF indicates that the bit is “0.”)

Address		Bits	Symbol	Function	Details
PLC output	Control signal 1	b2	DIR	Push direction specification: When this signal is OFF, push-motion operation is performed in the direction of the position determined by subtracting the positioning band from the target position. When the signal is ON, push-motion operation is performed in the direction of the position determined by adding the positioning band to the target position.	7.7.7 (22)
		b1	PUSH	Push-motion specification: Positioning operation is performed when this signal is OFF, and push-motion operation is performed when the signal is ON.	7.7.7 (21)
		b0	-	Not available.	-
	Control signal	b15	BKRL	Forced brake release: The brake is released when this signal turns ON.	7.7.7 (18)
		b14	RMOD	Operation mode: The AUTO mode is selected when this signal is OFF, and the MANU mode is selected when the signal is ON.	7.7.7 (19)
		b13	-	Not available.	-
		b12			
		b11			
		b10			
		b9			
		b8	JOG+	+Jog: The actuator moves in the direction opposite home when this signal is ON.	7.7.7 (13)
		b7	JOG-	-Jog: The actuator moves in the direction of home when this signal is ON.	7.7.7 (13)
		b6	JVEL	Jog-speed/inch-distance switching: The values set in parameter No. 26, “Jog speed” and parameter No. 48, “Inch distance” are used when this signal is OFF, and the values set in parameter No. 47, “Jog speed 2” and parameter No. 49, “Inch distance 2” are used when the signal is ON.	7.7.7 (14)
		b5	JISL	Jog/inch switching: Jog operation is performed when this signal is OFF, and inch operation is performed when the signal is ON.	7.7.7 (15)
		b4	SON	Servo ON command: The servo turns ON when this signal turns ON.	7.7.7 (5)
		b3	RES	Reset: A reset is performed when this signal turns ON.	7.7.7 (4)
		b2	STP	Pause: A pause command is issued when this signal turns ON.	7.7.7 (11)
		b1	HOME	Home return: A home-return command is issued when this signal turns ON.	7.7.7 (6)
		b0	DSTR	Positioning start: A move command is issued when this signal turns ON.	7.7.7 (8)

(* In the table, ON indicates that the applicable bit is “1,” while OFF indicates that the bit is “0.”)

Signal type		Bits	Symbol		Description	Details
PLC input	Current position	32-bit data	-		32-bit signed integer indicating the current position. The setting unit is 0.01 mm. (Example) Reading: 000003FFH = 1023 (decimal) = 10.23 mm * If current positions are read as hexadecimals, negative values are indicated by 2’s complements.	7.9 (3)
	Command current	32-bit data	-		32-bit integer. The electrical current presently specified by a command is indicated. The setting unit is mA. (Example) Reading: 000003FFH = 1023 (decimal) = 1023 mA	7.9 (3)
	Current speed	32-bit data	-		32-bit integer. The current speed is indicated. The setting unit is 0.01 mm/sec. (Example) Reading: 000003FFH = 1023 (decimal) = 10.23 mm/sec	7.9 (3)
	Alarm code	16-bit data	-		16-bit integer. If an alarm occurred, a corresponding alarm code is output. If no alarm is present, “0” is set. For details on alarms, refer to the operation manual for the controller.	7.9 (3)
	Status code	b15	EMGS		Emergency stop: An emergency stop is actuated when this signal turns ON.	7.7.7 (2)
		b14	PWR		Controller ready: This signal turns ON when the controller becomes ready.	7.7.7 (1)
		b13	ZONE2		Zone 2: This signal turns ON when the current position is inside the specified zone.	7.7.7 (12)
		b12	ZONE1		Zone 1: This signal turns ON when the current position is inside the specified zone.	7.7.7 (12)
		b11	PZONE		Position zone: This signal turns on when the current position is inside the position zone.	7.7.7 (12)
		b10	ACON	-	Not available (ON/OFF status is indeterminable).	-
			PCON	LOAD	Load output judgment: When this signal is ON, the specified load has been reached. When the signal is OFF, the load has not been reached yet. (For details, refer to the operation manual for the controller.)	7.7.7 (26)
		b9	ACON	-	Not available (ON/OFF status is indeterminable).	-
			PCON	TRQS	Torque level: When this signal is ON, the specified torque has been reached. When the signal is OFF, the torque has not been reached yet. (For details, refer to the operation manual for the controller.)	7.7.7 (27)
		b8	RMDS		Operation mode status: This signal is OFF when the current mode is AUTO, or ON when the mode is MANU.	7.7.7 (19)
		b7	GHMS		Home return in progress: This signal remains ON while home return is in progress.	7.7.7 (6)
		b6	PUSHS		Push motion in progress: This signal remains ON while push-motion operation is in progress.	7.7.7 (25)
		b5	PSFL		Load missed in push motion: This signal turns ON when the actuator missed the load in push-motion operation.	7.7.7 (23)
		b4	SV		Ready: This signal turns ON when the servo turns ON.	7.7.7 (5)
		b3	ALM		Alarm: This signal turns ON when an alarm occurs.	7.7.7 (3)
		b2	MOVE		Moving signal: This signal remains ON while the actuator is moving.	7.7.7 (9)
		b1	HEND		Home return complete: This signal turns ON when home return is completed.	7.7.7 (6)
		b0	PEND		Position complete signal: This signal turns ON when positioning is completed.	7.7.7 (10)

7.7.6 Remote I/O Mode 2 (Number of Occupied Channels: 6)

In this mode, the actuator is operated by specifying position numbers, just like you do when PIOs (24-V I/Os) are used.
Set position data using the RC PC software or teaching pendant.
The number of available positions is determined by the setting of parameter No. 25, “PIO pattern.”
This mode is the same as the remote I/O mode, but the current-position read function and command-current read function are also available.
The features of each PIO pattern are shown below. (For details, refer to the operation manual for the controller.)

Value set in parameter No. 25	Operation mode	I/O specification
0	Positioning mode	64 positioning points and two zone output points are available.
1	Teaching mode	64 positioning points and one zone output point is available. Positioning operation and jog operation are supported. The current position can be written to a specified position.
2	256-point mode	256 positioning points and one zone output point is available.
3	512-point mode	512 positioning points are available. There are no zone outputs.
4	Solenoid mode 1	7 positioning points and two zone output points are available. A direct operation command can be issued for each position number. A position complete signal is output for each position number.
5	Solenoid mode 2	3 positioning points and two zone output points are available. The actuator is operated by specifying forward, backward and intermediate position commands. A position complete signal is output separately for the front end, rear end and intermediate position.

The key ROBO Cylinder functions that can be controlled in this mode are summarized in the table below.

ROBO Cylinder function	PIO patterns					
	0: Positioning mode	1: Teaching mode	2: 256-point mode	3: 512-point mode	4: Solenoid mode 1	5: Solenoid mode 2
Home-return operation	○	○	○	○	○	X
Positioning operation	○	○	○	○	○	○
Speed and acceleration/deceleration setting	○	○	○	○	○	○
Pitch feed (inching)	○	○	○	○	○	○
Push-motion operation	○	○	○	○	○	X
Speed change during movement	○	○	○	○	○	○
Operation at different acceleration and deceleration	○	○	○	○	○	○
Pause	○	○	○	○	○	○ (*1)
Zone signal output	○	○	○	X	○	○
PIO pattern selection (set by a parameter)	○	○	○	○	○	○

○: Supported / X: Not supported

(*1) This function is supported when parameter No. 27, “Move command type” is set to “0.”
The actuator can be paused by turning the move command OFF.

(1) PLC channel configuration (* n indicates the node address of each axis.)

Parameter No. 84	ACON/PCON DI and input register	PLC output channel	ACON/PCON DO and output register	PLC input channel
4	Port number 0 to 15	n+0	Current position	n+0
	Occupied area	n+1	Occupied area	n+1
		n+2	Current position	n+2
		n+3		n+3
		n+4	Command current	n+4
		n+5		n+5

(Note) The areas denoted by “occupied area” cannot be used for any other purpose. Also exercise caution to avoid node address duplication.

(2) I/O signal assignments for each axis

The I/O signals of each axis consist of six input words (channels) and six output words (channels) in the I/O areas.

- The channels controlled by port number are controlled using ON/OFF bit signals.
- The current position is a 2-word (32-bit) binary data (unit: 0.01 mm).
- The command current is a 2-word (32-bit) binary data (unit: 1 mA).

PLC output (* n indicates the node address of each axis.)
Channel

1 word (channel) = 16 bits

n+0	F	E	D	C	B	A	9	8	7	6	5	4	3	2	1	0
Controller input port number	15	14	13	12	11	10	9	8	7	6	5	4	3	2	1	0

PLC input (* n indicates the node address of each axis.)

Channel

1 word (channel) = 16 bits

n+0	F	E	D	C	B	A	9	8	7	6	5	4	3	2	1	0
Controller output port number	15	14	13	12	11	10	9	8	7	6	5	4	3	2	1	0

n+1	b15	b14	b13	b12	b11	b10	b9	b8	b7	b6	b5	b4	b3	b2	b1	b0
Not available.																

n+2	b15	b14	b13	b12	b11	b10	b9	b8	b7	b6	b5	b4	b3	b2	b1	b0
Current position (lower word)																

n+3	b15	b14	b13	b12	b11	b10	b9	b8	b7	b6	b5	b4	b3	b2	b1	b0
Current position (upper word)																

If the current position is a negative value, it is indicated by a 2's complement.

n+4	b15	b14	b13	b12	b11	b10	b9	b8	b7	b6	b5	b4	b3	b2	b1	b0
Command current (lower word)	32,768	16,384	8,192	4,096	2,048	1,024	512	256	128	64	32	16	8	4	2	1

n+5	b15	b14	b13	b12	b11	b10	b9	b8	b7	b6	b5	b4	b3	b2	b1	b0
Command current (upper word)	—	—	—	—	—	—	—	—	—	—	—	—	524,288	262,144	131,072	65,536

(3) I/O signal assignments

For the signal assignments corresponding to each PIO pattern, refer to the I/O signal assignments for the remote I/O mode explained in 7.7.2 (3).

Signal assignments under the command-current read function and current-position read function are shown below.

Signal type		Bits	Symbol	Description	Details
PLC input	Current position	32-bit data	-	32-bit signed integer indicating the current position. The setting unit is 0.01 mm. (Example) Reading: 000003FFH = 1023 (decimal) = 10.23 mm * If current positions are read as hexadecimals, negative values are indicated by 2's complements.	-
PLC input	Command current	32-bit data	-	32-bit integer. Indicate the value of electrical current specified by the current command. The setting unit is 1 mA. (Example) Reading: 000003FFH = 1023 (decimal) = 1023 mA	-

7.7.7 I/O Signal Controls and Functions

* ON indicates that the applicable bit signal is “1,” while OFF indicates that the bit signal is “0.”
How the I/O signals used in the position/simple direct mode, half direct mode and full direct mode are controlled, as well as the functions provided by these signals, are explained below. For the I/O signals used in the remote I/O mode and remote I/O mode 2, refer to the operation manual for the controller.

(1) Controller ready (PWR) [PLC input signal]

This signal turns ON when the controller has become ready to perform control following the power on.
■ Function
The PWR signal turns ON when the controller has been initialized successfully and become ready to perform control following the power on, regardless of the alarm status, servo status or any other condition. Even when an alarm is present, the PWR signal turns ON as long as the controller is ready.

(2) Emergency stop (EMGS) [PLC input signal]

This signal turns ON when the controller has entered the emergency stop mode.
■ Function
The EMGS signal turns ON when the controller has entered the emergency stop mode (motor drive power has been cut off). The signal will turn OFF once the emergency stop is cancelled.

(3) Alarm (ALM) [PLC input signal]

This signal turns ON when the controller’s protective circuit (function) has detected an error.
■ Function
The ALM signal turns ON when the controller’s protective circuit (function) has actuated following an error detection.
When the cause of the alarm is removed and the reset (RES) signal is turned ON, the ALM signal will turn OFF if the applicable alarm is an operation-reset alarm. (To reset cold-start alarms, the power must be reconnected.)
When an alarm is detected, the status indicator LED (refer to 7.4, “DeviceNet Interface”) on the front panel of the controller will illuminate in red.

(4) Reset (RES) [PLC output signal]

This signal has two functions. One is to reset controller alarms, and the other is to cancel the remaining travel while the actuator is paused.
■ Function
[1] Turning the RES signal from OFF to ON after removing the cause of the present alarm will reset the alarm (ALM) signal. (To reset cold-start alarms, the power must be reconnected.)
[2] Turning the RES signal from OFF to ON while the actuator is paused will cancel the remaining travel.

(5) Servo ON command (SON) [PLC output signal]
Ready (SV) [PLC input signal]

When the SON signal is turned ON, the servo will turn on.
When the servo turns on, the status indicator LED (refer to 7.4, “DeviceNet Interface”) on the front panel of the controller will illuminate in green.
The SV signal is synchronized with this LED.

■ Function

The controller servo can be turned on/off using the SON signal.
While the SV signal is ON, the controller servo remains on and the actuator can be operated.
The relationship of the SON signal and SV signal is shown below.

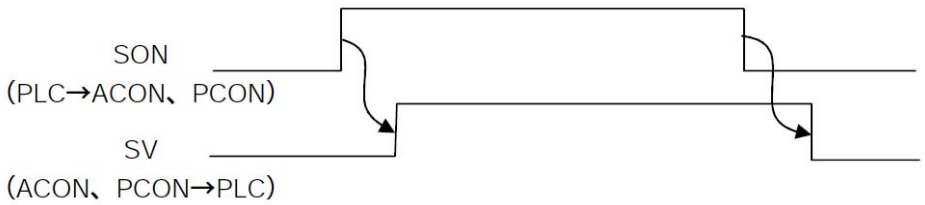

(6) Home return (HOME) [PLC output signal]
Home return complete (HEND) [PLC input signal]
Home return in progress (GHMS) [PLC input signal]

When the HOME signal is turned ON, the HOME command will be processed at the leading (ON) edge of the signal and home-return operation will be performed automatically. The GHMS signal turns ON while the home return is in progress.
Once the home return has completed, the HEND signal turns ON and the GHMS signal turns OFF.
Program the controller so that the HOME signal will turn OFF after the HEND signal turns ON. Once it is turned ON, the HEND signal will not turn OFF until the power is turned off or a HOME signal is input again.
After a home return has been performed once, another home return can be performed by turning ON the HOME signal.

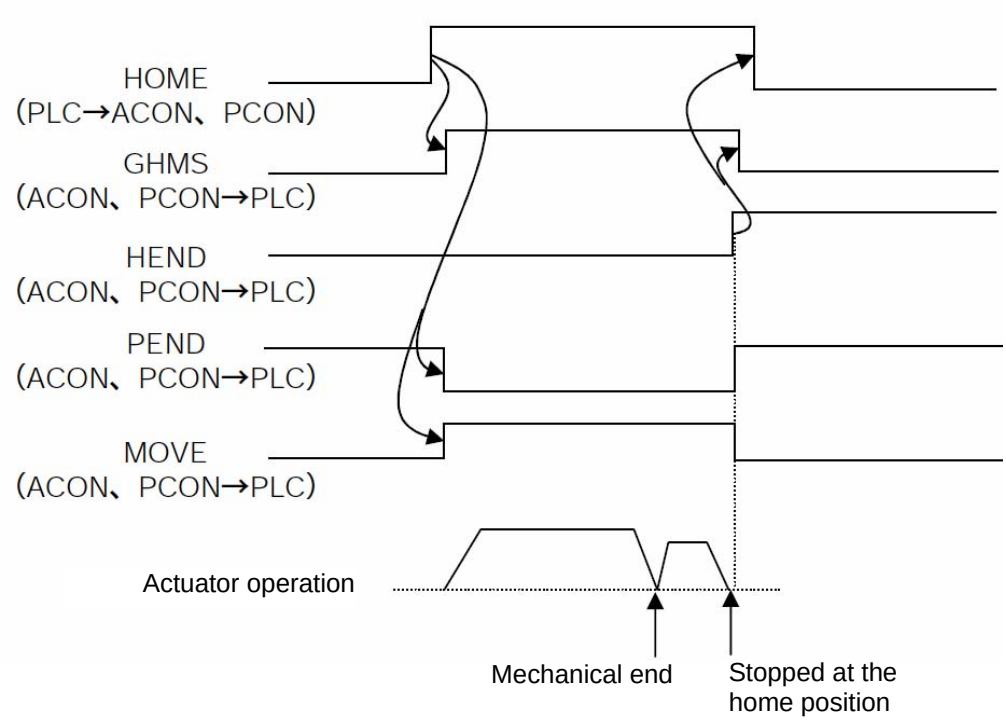

⚠Caution: In the remote I/O mode, remote I/O mode 2 or position/simple direct mode, issuing a positioning command to a given position following the power on, without performing a home return first, will cause the actuator to automatically return home and then perform the positioning. Take note that this applies only to the first positioning command following the power on.
Exercise caution that in the half direct mode or full direct mode, issuing a positioning command to a given position following the power on, without performing a home return first, will generate an alarm ("Error Code 83: Alarm home ABS (absolute position move command when home return is not yet completed)" (operation-reset alarm).

(7) Positioning start (CSTR): Used in the position/simple direct mode [PLC output signal]

The CSTR command is processed at the leading (ON) edge of the signal, upon which the actuator will move to the position set by the target position corresponding to the specified position number or by the target position channel of the PLC.
Whether to use the target position corresponding to the specified position number or the target position channel of the PLC is determined by control signal b11 (position/simple-direct switching (PMOD) signal).

- PMOD = OFF: Use the target position data corresponding to the specified position number
- PMOD = ON: Use the value set to the target position channel of the PLC.

If this command is issued when no home-return operation has been performed yet after the power on (= while the HEND signal is OFF), the actuator will automatically return home and then move to the target position.
Program the controller so that the CSTR signal will be turned OFF after the position complete (PEND) signal turns OFF.

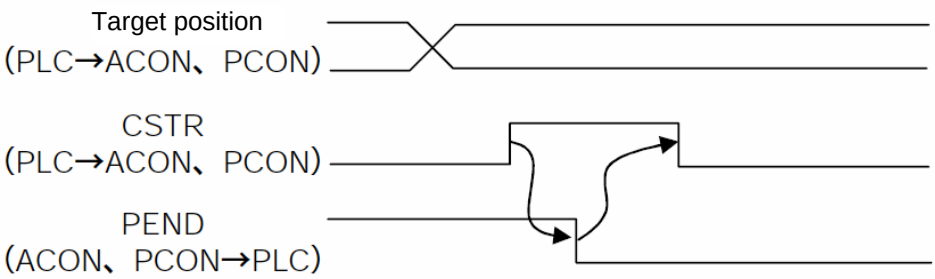

(8) Positioning command (DSTR): Used in the half direct mode and full direct mode [PLC output signal]

The DSTR command is processed at the leading (ON) edge of the signal, upon which the actuator will move to the target position input to the target position channel of the PLC. If this command is issued when no home-return operation has been performed yet after the power on (= while the HEND signal is OFF), an alarm (operation-reset alarm) will occur.
Program the controller so that this signal will be turned OFF after the position complete (PEND) signal turns OFF

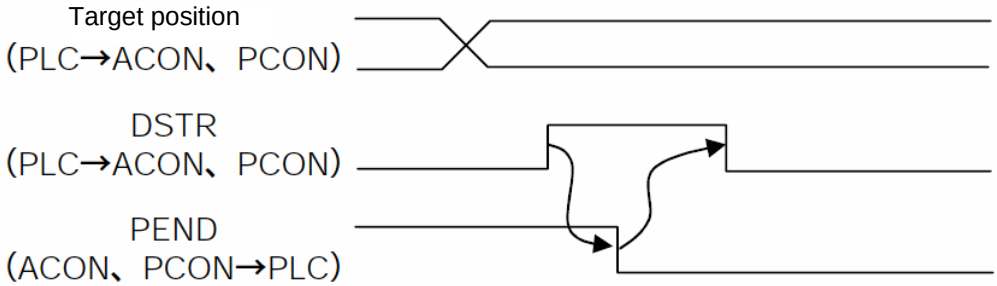

(9) Moving signal (MOVE) [PLC input signal]

This signal turns ON while the actuator slider or rod is moving (also while home-return operation, push-motion operation or jog operation is in progress).
The MOVE signal turns OFF upon completion of positioning, home-return or push-motion operation or while the actuator is paused.

(10) Position complete signal (PEND) [PLC input signal]

This signal turns ON after the actuator has moved to the target position and entered the positioning band or completed the push-motion operation.

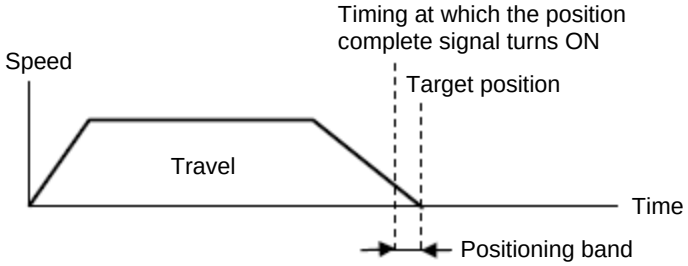

When the servo turns on, positioning is performed based on the current position set as the target position. Accordingly, the PEND signal turns ON and will turn OFF when a positioning operation is started thereafter with the home return (HOME) signal, positioning start (CSTR) signal or positioning command (DSTR) signal.

> ⚠ Caution: If the servo turns off or an emergency stop is actuated while the actuator is stopped at the target position, the PEND signal will turn OFF.
> When the servo subsequently turns on, the PEND signal will turn ON if the current position is inside the positioning band.
> Also take note that the PEND signal will not turn ON if the CSTR or DSTR signal remains ON.

(11) Pause (STP) [PLC output signal]

When this signal is turned ON, the moving axis will decelerate to a stop. If the signal is turned OFF thereafter, the axis movement will resume.
The acceleration used immediately after resumption of operation, and deceleration used when the actuator stops, conform to the acceleration/deceleration value corresponding to the position number set by the specified position number channel in the position/simple direct mode, or to the value of the acceleration/deceleration channel in the half direct mode.
In the full direct mode, the acceleration and deceleration conform to the values of the acceleration channel and deceleration channel.

(12) Zone 1 (ZONE1) [PLC input signal]
Zone 2 (ZONE2) [PLC input signal]
Position zone (PZONE) [PLC input signal]

Each signal turns ON when the current position of the actuator is inside the specified zone, and turns OFF when the current position is outside the zone.
[1] Zone 1, zone 2
Each zone is set by user parameters.
The ZONE1 signal is set by parameter No. 1, “Zone boundary 1+” and No. 2, “Zone boundary 1-.”
The ZONE2 signal is set by parameter No. 23, “Zone boundary 2+” and No. 24, “Zone boundary 2-.”
The ZONE1 and ZONE2 signals become effective following a completion of home return, after which they will remain effective even while the servo is turned off.
[2] Position zone
Each zone is set in the position table or using the zone boundary channels.
In the position/simple direct mode, the PZONE signal is set in the position table.
In the full direct mode, the PZONE signal is set using the zone boundary channels.
(*) The PZONE signal is not available in the half direct mode.
The PZONE signal becomes effective when a move command is issued following a completion of home return, after which it will remain effective even while the servo is turned off.

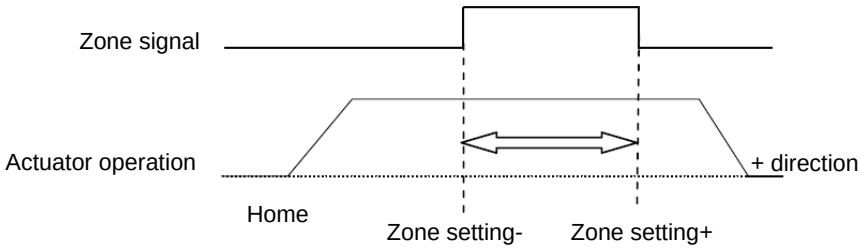

(13) +Jog (JOG+) [PLC output signal]
-Jog (JOG-) [PLC output signal]

These signals are used as starting commands for jog operation or inch operation.
If a + command is issued, the actuator will operate in the direction opposite home. When a – command is issued, the actuator will operate in the direction of home.

[1] Jog operation
Jog operation can be performed when the jog/inch switching (JISL) signal is OFF.
The actuator will operate in the direction opposite home while the JOG+ is ON, and decelerate to a stop once the signal turns OFF.
The actuator will operate in the direction of home while the JOG- is ON, and decelerate to a stop once the signal turns OFF.
The specific operation follows the values set in the following parameters:

- The speed conforms to the value of the parameter set by the jog-speed/inch-distance switching (JVEL) signal.
  If the JVEL signal is OFF, the actuator operates according to parameter No. 26, “PIO jog speed.”
  If the JVEL signal is ON, the actuator operates according to parameter No. 47, “PIO jog speed 2.”
- The acceleration/deceleration conforms to the rated acceleration/deceleration (the specific value varies depending on the actuator).
- If both the JOG+ and JOG- signals turn ON, the actuator will decelerate to a stop.

[2] Inch operation
Inch operation can be performed when the JISL signal is ON.
The actuator moves by the inch distance every time this signal turns ON.
The actuator will operate in the direction opposite home when the JOG+ is ON, or in the direction of home when the JOG- is ON.
The specific operation follows the values set in the following parameters:

- The speed conforms to the value of the parameter specified by the JVEL signal.
  If the JVEL signal is OFF, the actuator operates according to parameter No. 26, “PIO jog speed.”
  If the JVEL signal is ON, the actuator operates according to parameter No. 47, “PIO jog speed 2.”
- The travel conforms to the value of the parameter specified by the JVEL signal.
  If the JVEL signal is OFF, the actuator operates according to parameter No. 48, “PIO inch distance.”
  If the JVEL signal is ON, the actuator operates according to parameter No. 49, “PIO inch distance 2.”
- The acceleration/deceleration conforms to the rated acceleration/deceleration (the specific value varies depending on the actuator).

While performing a normal operation, the actuator will continue with the normal operation even after the +jog or -jog signal is turned ON (the jog signal will be ignored).
While the actuator is paused, turning ON the +jog or -jog signal will not cause the actuator to operate.

(Note) Since the software stroke limits are invalid before a home return is completed, the actuator may collide with the mechanical end. Exercise caution.

(14) Jog-speed/inch-distance switching (JVEL) [PLC output signal]

This signal is used to switch between the jog speed parameter when jog operation is selected, and the inch distance parameter when inch operation is selected.

JVEL signal	Jog operation: JISL = OFF	Inch operation: JISL = ON
OFF	Parameter No. 26, “Jog speed”	Parameter No. 26, “Jog speed” Parameter No. 48, “Inch distance”
ON	Parameter No. 47, “Jog speed 2”	Parameter No. 47, “Jog speed 2” Parameter No. 49, “Inch distance 2”

(15) Jog/inch switching (JISL) [PLC output signal]

This signal is used to switch between jog operation and inch operation.
JISL = OFF: Jog operation
JISL = ON: Inch operation
If the JISL signal turns ON (inch) while the actuator is moving by jogging, the actuator will decelerate to a stop and then switch to the inch function.
If the JISL signal turns ON (jog) while the actuator is moving by inching, the actuator will complete the movement and then switch to the jog function.
The table below summarizes the relationship of the ON/OFF statuses of the JISL signal and jog-speed/inch-distance switching (JVEL) signal.

		Jog operation	Inch operation
JISL		OFF	ON
JVEL=OFF	Speed	Parameter No. 26, “Jog speed”	Parameter No. 26, “Jog speed”
	Travel	-	Parameter No. 48, “Inch distance”
	Acceleration/ deceleration	Rated value (The specific value varies depending on the actuator.)	Rated value (The specific value varies depending on the actuator.)
JVEL=ON	Speed	Parameter No. 47, “Jog speed 2”	Parameter No. 47, “Jog speed 2”
	Travel	-	Parameter No. 49, “Inch distance 2”
	Acceleration/ deceleration	Rated value (The specific value varies depending on the actuator.)	Rated value (The specific value varies depending on the actuator.)
Operation		When the JOG+/JOG- signal is ON	Upon detection of the leading (ON) edge of the JOG+/JOG- signal

(16) Teaching command (MODE) [PLC output signal]
Teaching mode signal (MODES) [PLC input signal]

When the MODE signal is turned ON, the actuator mode will switch from normal operation to teaching.
Upon switching to the teaching mode, the controller of each axis will turn the MODES signal ON.
Program the PLC so that teaching operation will be performed after the MODES signal turns ON.
(Note) For the actuator mode to switch from normal operation to teaching, the following conditions must be satisfied:

- The actuator (motor) is stopped.
- The +jog (JOG+) signal and -jog (JOG-) signal are turned OFF.
- The position-data read command (PWRT) signal and positioning start (CSTR) signal are turned OFF.

(Note) The actuator will not return to the normal operation mode unless the PWRT signal is OFF.

(17) Position-data read command (PWRT) [PLC output signal]
Position-data read complete (WEND) [PLC input signal]

The PWRT signal is effective when the teaching mode (MODES) signal is ON.
Turn the PWRT signal ON (*1), and the data of the current position will be written to the “Position” field under the position number set to the specified position number channel of the PLC. (*2)
The WEND signal will turn ON once reading is complete.
Program the host PLC so that the PWRT signal will be turned OFF after the WEND signal turns ON.
If the PWRT signal is turned OFF before the WEND signal turns ON, the WEND signal will not turn ON.
When the PWRT signal is turned OFF, the WEND signal will turn OFF.

(*1) Keep the PWRT signal OFF for at least 20 msec. If the signal remains ON for less than 20 msec, the position may not be written.
(2) If any data other than the position is not yet defined, the default value of the corresponding parameter will be written. (refer to the operation manual for the controller.)

At least 20 msec

(18) Forced brake release (BKRL) [PLC output signal]

The brake can be forcibly released by turning this signal ON.

(19) Operation mode (RMOD) [PLC output signal]
Operation mode status (RMDS) [PLC input signal]

The operation mode is selected as shown below based on the RMOD signal and the MODE switch on the front panel of the controller.
Whether the current mode is AUTO or MANU can be checked using the RMDS signal.
The combinations of RMOD signal and MODE switch settings and the corresponding operation modes are shown below.

	Controller MODE switch = AUTO	Controller MODE switch = MANU
RMOD signal = OFF (AUTO mode is specified)	AUTO mode (RMDS=OFF)	MANU mode (RMDS=ON)
RMOD signal = ON (MANU mode is specified)	MANU mode (RMDS=NS)	MANU mode (RMDS=ON)

(Note) In the MANU mode, operation from the PLC cannot be performed.

(20) Position/simple-direct switching (PMOD) [PLC output signal]

This signal is used to switch between the mode where the target position is set using a value registered in the position table stored in the controller, and the mode where a value specified by the target position channel of the PLC is used.
PMOD = OFF: Use the position table
PMOD = ON: Use the value of the target position channel

(21) Push-motion specification (PUSH) [PLC output signal]

Push-motion operation can be performed when a move command is issued after turning this signal ON.
Normal positioning operation is performed if this signal is set to OFF.
(For the timing of setting this signal, refer to (2), “Operation in the half direct mode” under 7.9, “Operation.”)

(22) Push direction specification (DIR) [PLC output signal]

This signal specifies the direction in which the actuator pushes the load.
When the DIR signal is turned OFF, the actuator will push the load in the direction of the value determined by subtracting the positioning band from the target position.
When the DIR signal is turned ON, the actuator will push the load in the direction of the value determined by adding the positioning band to the target position.
The DIR signal is invalid during normal positioning operation.
(For the timing of setting this signal, refer to (2), “Operation in the half direct mode” under 7.9, “Operation.”)

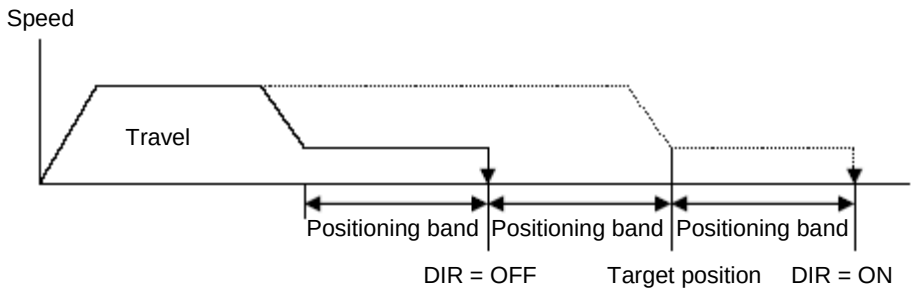

(23) Load missed in push motion (PSFL) [PLC input signal]

This signal turns ON when the actuator has not contacted the load in push-motion operation after having moved the distance set by the “Positioning band” field in the position table stored in the controller or by the positioning band channel of the PLC.
(For the timing of setting this signal, refer to (2), “Operation in the half direct mode” under 7.9, “Operation.”)

(24) Incremental specification (INC) [PLC output signal]

If a move command is issued while this signal is ON, the actuator will move from the current position by the value input to the target position channel of the PLC. (Incremental move)
If the INC signal is OFF, the actuator will move to the position corresponding to the value of the target position channel of the PLC.

(25) Push motion in progress (PUSHS) [PLC input signal]

This signal turns ON while push-motion operation is in progress.

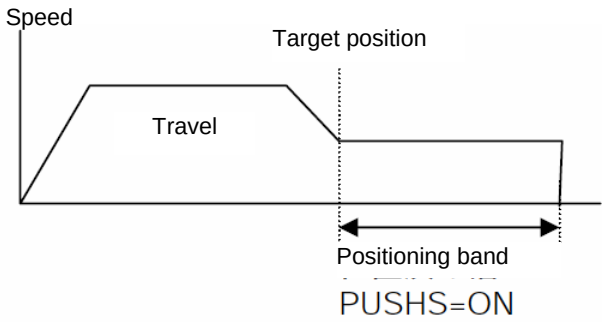

The PUSHS signal will turn OFF once the actuator misses the load in push-motion operation, a pause command or the next move command is issued, or the servo turns off.
(For the timing of setting this signal, refer to (2), “Operation in the half direct mode” under 7.9, “Operation.”)

(26) Load output judgment (LOAD) [PLC input signal] [Dedicated PCON function]

This signal is effective only during push-motion operation.
To use the LOAD signal in a press-fit application, the controller must know whether the specified load threshold has been reached during push-motion operation.
The load threshold and check range are set by the PLC, and the LOAD signal will turn ON when the command torque (motor current) exceeds the threshold inside the check range.
Under the LOAD signal, judgment is made based on whether the command torque has exceeded the threshold for the specified time cumulatively.
The processing procedure is the same as the procedure applicable to push judgment. The time of load output judgment can be changed freely using parameter No. 50, “Load output judgment time.”
The status of this signal will be retained until the next move command is received.

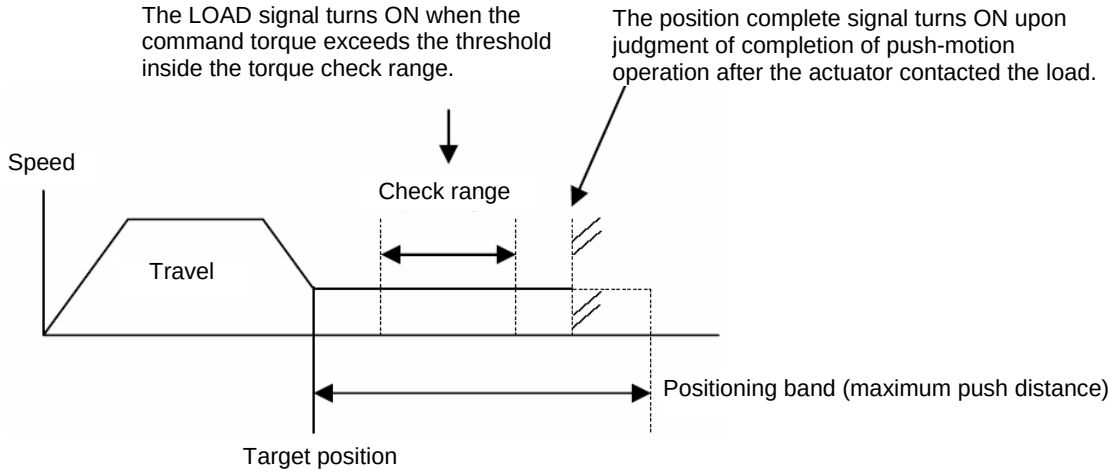

- The push speed is set by parameter No. 34, “Push speed.”
  The factory setting varies with an individual actuator based on the characteristics of the actuator. Specify an appropriate speed by considering the material and shape of the load, etc.
- Set parameter No. 50, “Load output judgment time.”
- Set parameter No. 51, “Torque check range” to “0 [Enable].”
- The threshold check range is set by the zone boundary+ channel and zone boundary- channel of the PLC.
- The threshold is set by the load current threshold channel of the PLC.
- The positioning band is set by the positioning band channel of the PLC.
  Set a positioning band slightly longer than the last position, by considering the mechanical variation of the load.
  For details, refer to the operation manual for the controller.

⚠Warning:
- If the actuator contacts the load before the target position is reached, a servo error will occur. Pay extra attention to the positioning between the target position and the load.
- The actuator continues to push the load at the push current at standstill determined by the current limiting value.
  Since the actuator is not stopped, exercise due caution when handling the actuator or load in this condition.

(27) Torque level (TRQS) [PLC input signal] [Dedicated PCON function]

This signal is effective only during push-motion operation.
If the motor current reaches the load threshold during push-motion operation (= while the actuator is moving within the positioning band), the TRQS signal will turn ON.
Since the level of current is monitored, the ON/OFF status of this signal will also change when the current changes.
The speed at which the actuator can push the load varies depending on the motor and lead. To set a desired speed, therefore, the applicable parameters must be adjusted.

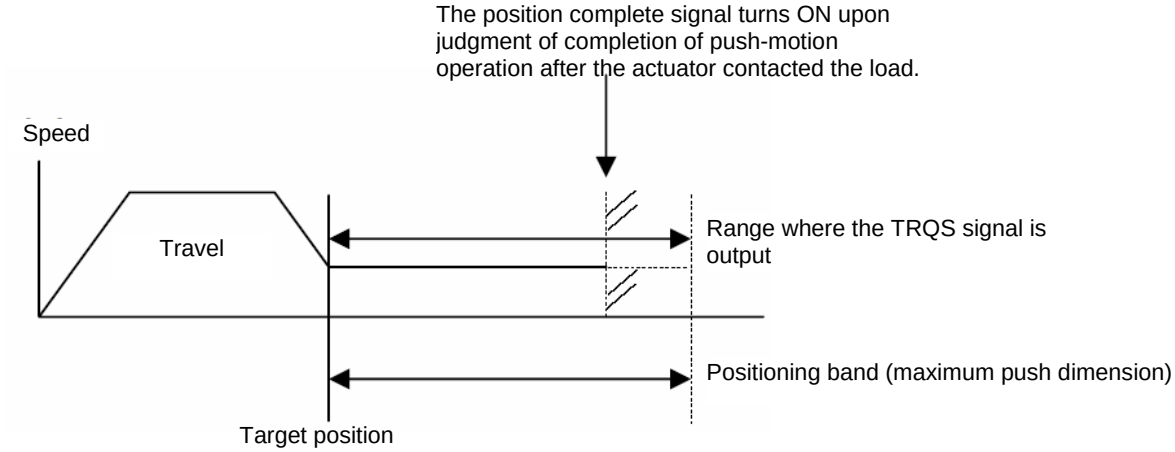

- The push speed is set by parameter No. 34, “Push speed.”
  The factory setting varies with an individual actuator based on the characteristics of the actuator.
  Specify an appropriate speed by considering the material and shape of the load, etc.
- Set parameter No. 50, “Load output judgment time.”
- Set parameter No. 51, “Torque check range” to “1 [Invalid].”
- The threshold is set by the load current threshold channel of the PLC.
- The positioning band is set by the positioning band channel of the PLC.
  Set a positioning band slightly longer than the last position, by considering the mechanical variation of the load.
  For details, refer to the operation manual for the controller.

⚠Warning:
- If the actuator contacts the load before the target position is reached, a servo error will occur. Pay extra attention to the positioning between the target position and the load.
- The actuator continues to push the load at the push current at standstill determined by the current limiting value.
  Since the actuator is not stopped, exercise due caution when handling the actuator or load in this condition.

(28) Stopping control mode (SMOD) [PLC input signal] [Dedicated PCON function]

One general characteristic of pulse motors is that their holding current at standstill is greater compared to AC servo motors. Accordingly, an energy-saving mode is provided to help reduce the power consumption in a standstill state in applications where the actuator remains stationary for a long period at standby positions.
SMOD = ON: Use the full-servo control mode while standing by
SMOD = OFF: Do not use the full-servo control mode while standing by

- Full-servo control mode
  The pulse motor is servo-controlled to reduce the holding current.
  Although the specific level of current reduction varies depending on the actuator model, load condition, etc., the holding current generally drops to approx. 1/2 to 1/4.
  The actual holding current can be checked on the current monitor screen of the PC software.
  (Note) Micro-vibration or noise may generate in conditions where an external force is applied and also depending on the position at which the actuator is stopped.

Use this mode after confirming that it will not negatively affect any part of the whole system.

(29) Acceleration/deceleration mode (MOD1, MOD0)

[PLC input signal] [Dedicated ACON function]

These signals are used to select the acceleration/deceleration pattern characteristics. Select a desired mode before issuing an actuator move command.

MOD1	MOD0	Pattern name	Remarks
OFF	OFF	Trapezoid pattern	Factory setting
OFF	ON	S-motion	
ON	OFF	Primary delay filter	
ON	ON	Not available.	

Trapezoid pattern

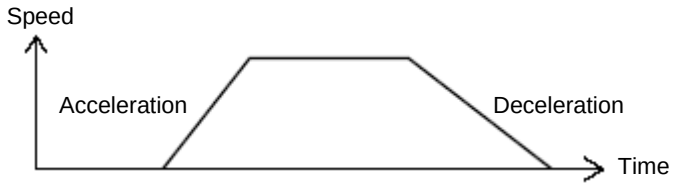

* The acceleration and deceleration are set in the “Acceleration” and “Deceleration” fields of the position data table.

S-motion

The actuator accelerates along a curve that increases gradually at first and then rises rapidly in the middle.
Use this mode if you want to set a high acceleration/deceleration to meet the tact time, but also want the actuator to accelerate/decelerate gradually at start of movement and immediately before stopping.

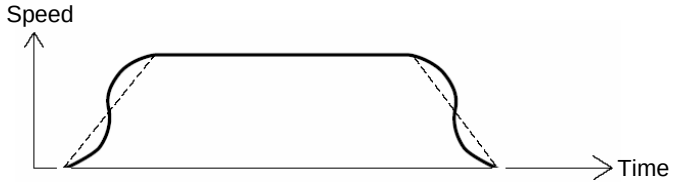

* The S-motion level is set by parameter No. 56, “S-motion ratio setting.” The setting unit is % and the setting range is 0 to 100.
(The above graph assumes a S-motion ratio of 100 %.)
If “0” is set, the S-motion mode will become invalid.
Take note that this mode will not be reflected in jog or inch operation performed from a PC or teaching pendant.

Primary delay filter

The acceleration/deceleration curve is more gradual than that of linear acceleration/deceleration (trapezoid pattern). Use this mode if you don’t want the load to receive micro-vibration during acceleration/deceleration.

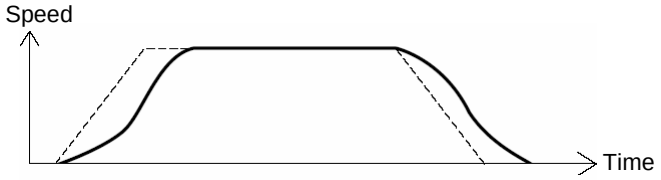

* The primary delay level is set by parameter No. 55, “Primary filter time constant for position command.” The minimum input unit is 0.1 msec and the setting range is 0.0 to 100.0.
If “0” is set, the primary delay mode will become invalid.
Take note that this mode will not be reflected in jog or inch operation performed from a PC or teaching pendant.

7.8 I/O Signal Timings

The maximum response time after a control signal is turned ON to operate the ROBO Cylinder in a PLC sequence program, until a corresponding response (status) signal is returned to the PLC, is expressed by the formula below:

Maximum response time (msec) = Yt + Xt + 3 + command processing time (operation time, etc.)

Yt: Master station → node transmission delay
Xt: Node → master station transmission delay
} Field network transmission delay

For the master station → node transmission delay (Yt) and node → master station transmission delay (Xt), refer to the operation manuals for the DeviceNet master unit and PLC installed in the master unit.

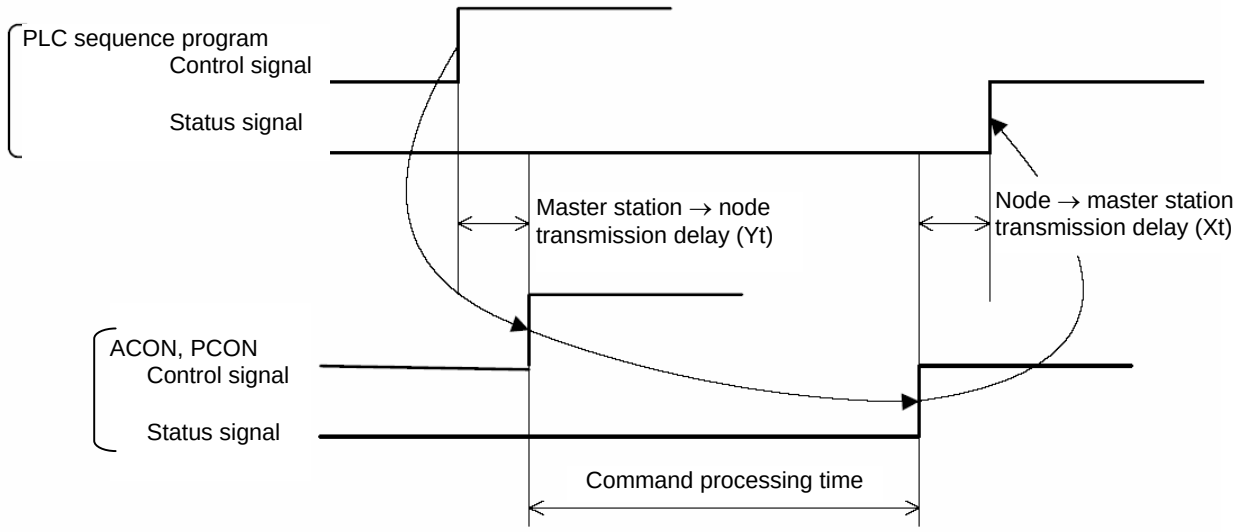

7.9 Operation

This section describes the timings of basic operations in the position/simple direct mode, half direct mode and full direct mode by using examples.
For the operation timings in the remote I/O mode and remote I/O mode 2, refer to the operation manual for the controller.
(In remote I/O mode 2, read the current position and current speed from the respective channels of the PLC, as deemed appropriate.)

(1) Operation in the position/simple direct mode

The actuator is operated by writing the position data to the target position channel of the PLC and specifying the speed, acceleration/deceleration, positioning band, push-motion current-limiting value, etc., using the position table.

- Example of operation (normal positioning operation)

(Preparation) Set all position data other than the target position (speed, acceleration/deceleration, positioning band, etc.) in the position table.
Turn the position/simple-direct switching (PMOD) signal ON.

[1] Set the target position data to the target position channel.
[2] Set the position number under which the position, acceleration/deceleration, etc., were set, to the specified position number channel.
[3] Turn the positioning start (CSTR) signal ON while the position complete (PEND) signal is ON or moving (MOVE) signal is OFF.
The data set in [1] and [2] are read by the controller at the leading edge of the CSTR signal.
[4] The PEND turns OFF upon an elapse of tpdf after the CSTR signal has turned ON.
[5] Turn the CSTR signal OFF after confirming that the PEND signal is OFF or MOVE signal is ON. Do not change the value of the target position channel until the CSTR signal is turned OFF.
[6] The MOVE signal turns ON simultaneously as the PEND signal turns OFF.
[7] The current position data is constantly updated. Once the remaining travel has fallen within the positioning band set by the position data, the PEND signal turns ON if the CSTR signal is OFF, and the completed position number is output to the completed position number channel.
If the completed position number channel is to be read upon completion of positioning, therefore, wait for an appropriate period (= until the actuator moves by the remaining travel) after the PEND signal has turned ON.
Also take note that the current position data may change slightly due to vibration, etc., even while the actuator is stopped.
[8] The target position data can be changed while the actuator is moving.
To change the target position, change the target position data, wait for at least the scan time of the PLC, and then turn the CSTR signal ON.
Change the CSTR signal after an elapse of at least the scan time of the PLC.

- Example of operation (push-motion operation)

In the case of push-motion operation, the current-limiting value is set in the “Push” field of the position data table in the preparation stage.
Perform positioning to the position number under which the value was set in the “Push” field, and the actuator will perform push-motion operation.

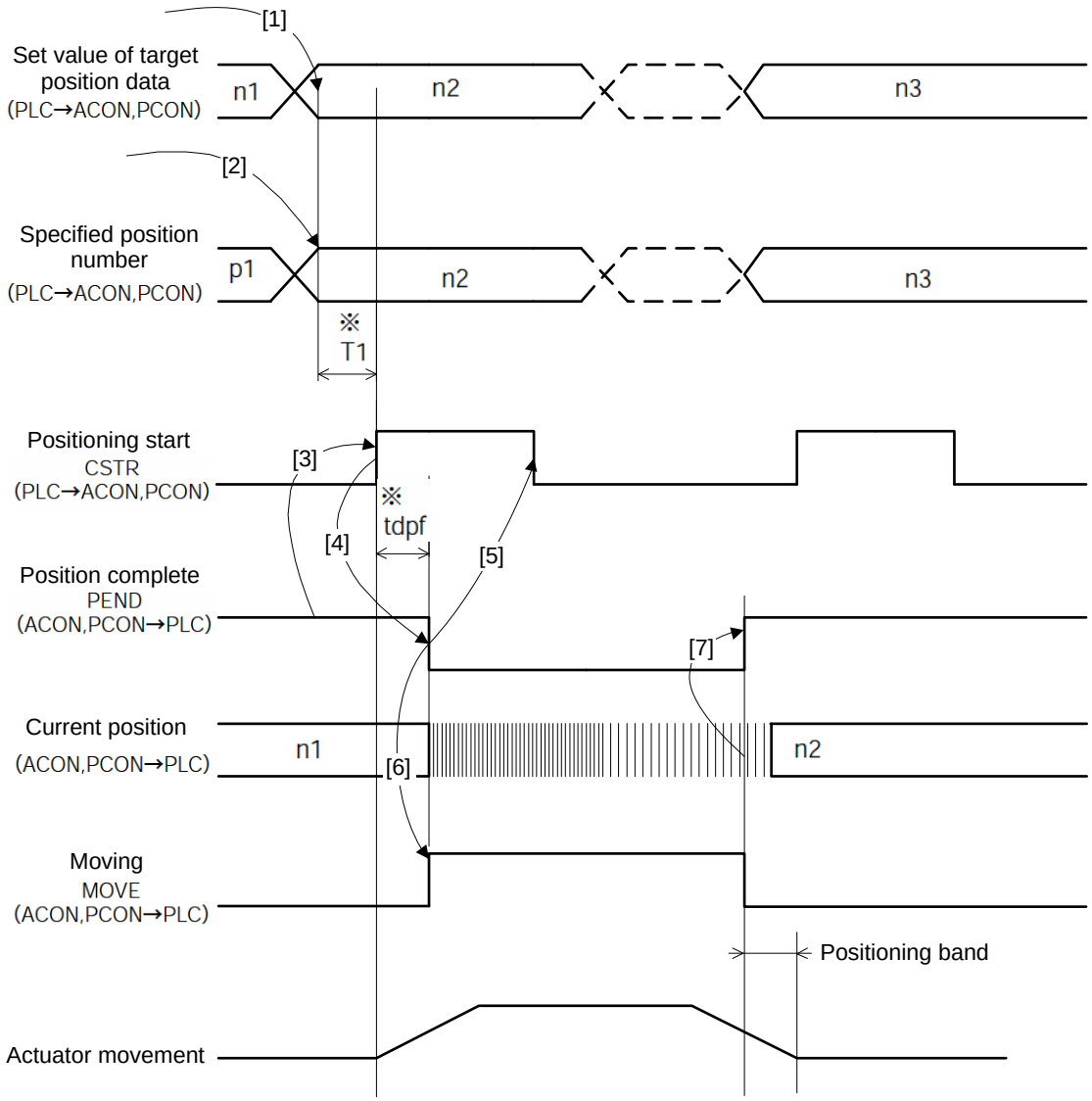

*T1: Make sure "T1 ≥ 0 ms" is satisfied by considering the scan time of the host controller.
*Yt + Xt ≤ tdpf ≤ Yt + Xt + 3 (msec)

(2) Operation in the half direct mode

The actuator is operated by specifying the data to the target position channel, positioning band channel, specified speed channel, acceleration/deceleration channel and push-motion current-limiting value channel of the PLC.

- Example of operation (push-motion operation)

[1] Set the target position data to the target position channel.
[2] Set the positioning band data to the positioning band channel.
[3] Set the speed data to the speed channel.
[4] Set the acceleration/deceleration data to the acceleration/deceleration channel.
[5] Set the push-motion current-limiting data to the push-motion current-limiting value channel.
[6] Turn the push direction (PUSH) signal ON.
[7] Specify the push direction using the push direction specification (DIR) signal. (Refer to 7.7.7 (22).)
[8] Turn the positioning command (DSTR) signal ON while the position complete (PEND) signal is ON or moving (MOVE) signal is OFF.
The data set in [1] to [5] are read by the controller at the leading edge of the DSTR signal.
[9] The PEND turns OFF upon an elapse of tpdf after the DSTR signal has turned ON.
[10] Turn the DSTR signal OFF after confirming that the PEND signal is OFF or MOVE signal is ON. Do not change the value of each channel until the DSTR signal is turned OFF.
[11] The MOVE signal turns ON simultaneously as the PEND signal turns OFF.
[12] The current position data is constantly updated.
[13] The PEND signal turns ON when the motor current has reached the current-limiting value set in [5] while the DSTR signal is OFF. (Completion of push-motion operation)
Even when the positioning band set in [2] has been reached, the load missed in push motion (PSFL) signal does not turn ON if the motor current has yet to reach the current-limiting value set in [5]. In this case, the PEND signal does not turn ON. (The actuator missed the load in push-motion operation.)
[14] Turn the PUSH signal OFF after the PEND or PSFL signal has turned ON.

- Example of operation (normal positioning operation)

For normal positioning operation, set the signal in [6] to OFF.
Once the remaining travel has fallen within the positioning band set by the position data, the PEND signal turns ON if the DSTR signal is OFF.

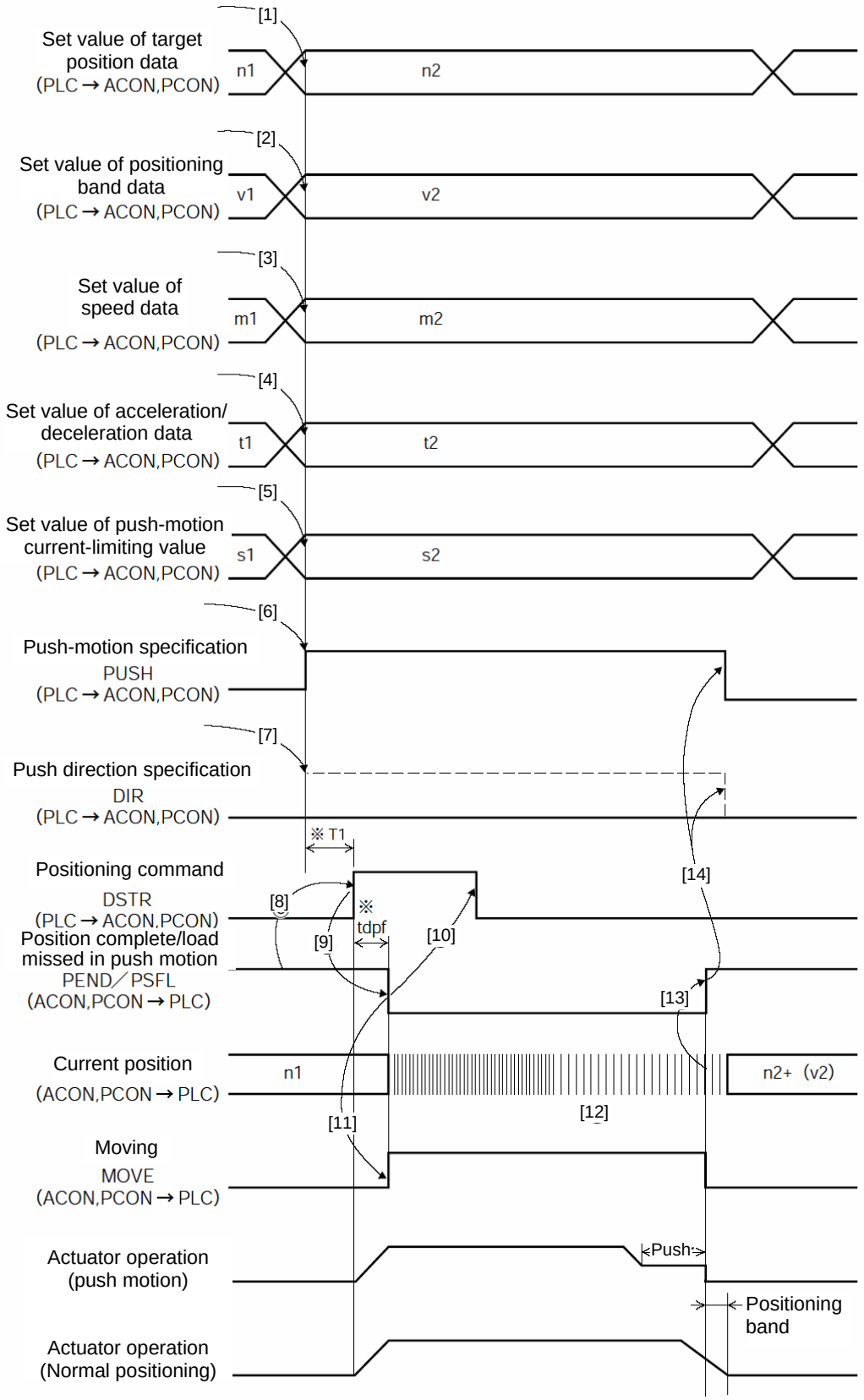

*T1: Make sure "T1 ≥ 0 ms" is satisfied by considering the scan time of the host controller.

*Yt + Xt ≤ tdpf ≤ Yt + Xt + 3 (msec)

(3) Operation in the full direct mode

The actuator is operated by specifying all conditions required for positioning to channels such as the target position channel and positioning band channel of the PLC.

- Example of operation (push-motion operation)

[1] Set the target position data to the target position channel.
[2] Set the positioning band data to the positioning band channel.
[3] Set the speed data to the speed channel.
[4] Set the boundary data for position zone output to the zone boundary+ channel and zone boundary- channel.
[5] Set the acceleration data to the acceleration channel.
[6] Set the deceleration data to the deceleration channel.
[7] Set the push-motion current-limiting data to the push-motion current-limiting value channel.
[8] Set the load current threshold data to the specification channel for load current threshold.
[9] Turn the push direction (PUSH) signal ON.
[10] Specify the push direction using the push direction specification (DIR) signal. (Refer to 7.7.7 (22).)
[11] Turn the positioning command (DSTR) signal ON while the position complete (PEND) signal is ON or moving (MOVE) signal is OFF.
The data set in [1] to [8] are read by the controller at the leading edge of the DSTR signal.
[12] The PEND turns OFF upon an elapse of tpdf after the DSTR signal has turned ON.
[13] Turn the DSTR signal OFF after confirming that the PEND signal is OFF or MOVE signal is ON. Do not change the value of each channel until the DSTR signal is turned OFF.
[14] The MOVE signal turns ON simultaneously as the PEND signal turns OFF.
[15] The current position data is constantly updated.
[16] The PEND signal turns ON when the motor current has reached the current-limiting value set in [7] while the DSTR signal is OFF. (Completion of push-motion operation)
Even when the positioning band set in [2] has been reached, the load missed in push motion (PSFL) signal does not turn ON if the motor current has yet to reach the current-limiting value set in [7]. In this case, the PEND signal does not turn ON. (The actuator missed the load in push-motion operation.)
[17] Turn the PUSH signal OFF after the PEND or PSFL signal has turned ON.

- Example of operation (normal positioning operation)

For normal positioning operation, set the signal in [9] to OFF.
Once the remaining travel has fallen within the positioning band set by the position data, the PEND signal turns ON if the DSTR signal is OFF.

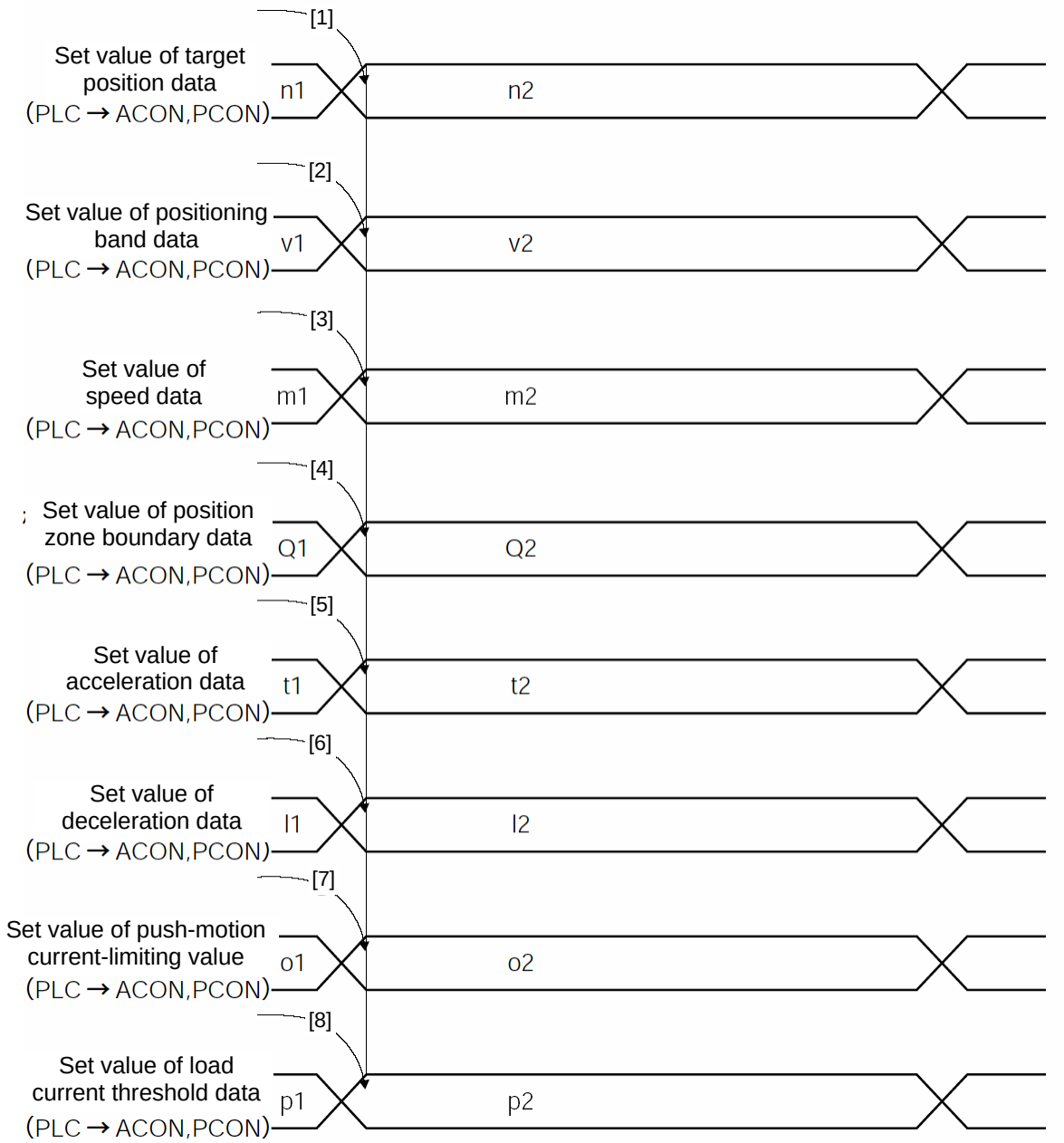
[1]
Set value of target position data (PLC → ACON,PCON)
n1
n2
[2]
Set value of positioning band data (PLC → ACON,PCON)
v1
v2
[3]
Set value of speed data (PLC → ACON,PCON)
m1
m2
[4]
Set value of position zone boundary data (PLC → ACON,PCON)
Q1
Q2
[5]
Set value of acceleration data (PLC → ACON,PCON)
t1
t2
[6]
Set value of deceleration data (PLC → ACON,PCON)
l1
l2
[7]
Set value of push-motion current-limiting value (PLC → ACON,PCON)
o1
o2
[8]
Set value of load current threshold data (PLC → ACON,PCON)
p1
p2

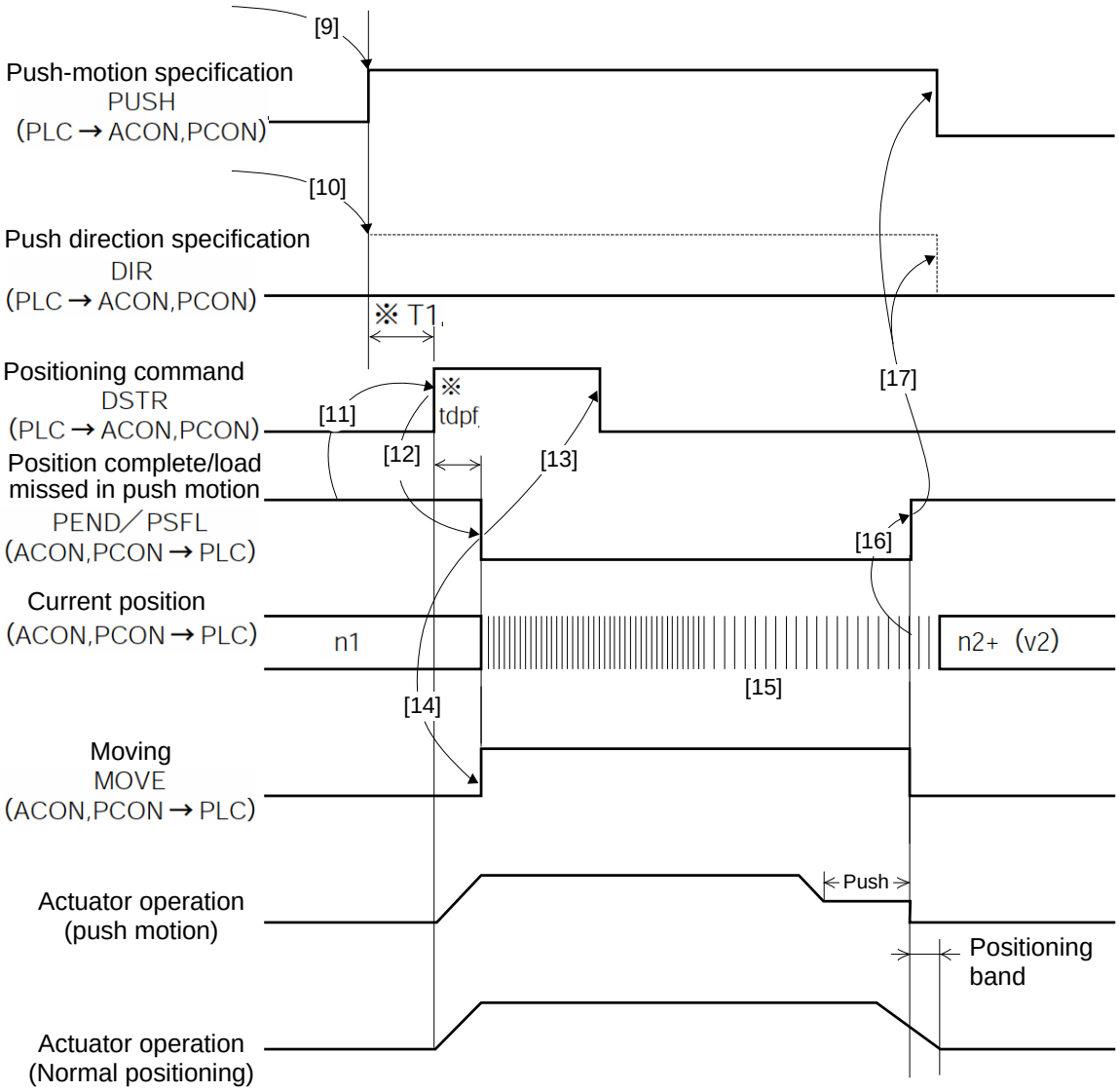

*T1: Make sure "T1 ≥ 0 ms" is satisfied by considering the scan time of the host controller.

*Yt + Xt ≤ tdpf ≤ Yt + Xt + 3 (msec)

(4) Data change during movement

In the half direct mode or full direct mode, the value currently set to a given channel among the channels for target position data, acceleration/deceleration data, speed data, positioning band and push-motion current-limiting value, can be changed while the actuator is moving.
After a desired data has been changed, keep the positioning command (DSTR) signal “ON” for at least tdpf.
Also make sure that after the DSTR is turned “OFF,” the signal will not be turned “ON” again until at least a time corresponding to “twcsON + twcsOFF” elapses.
An example of changing the speed or acceleration/deceleration is shown in the figure below.

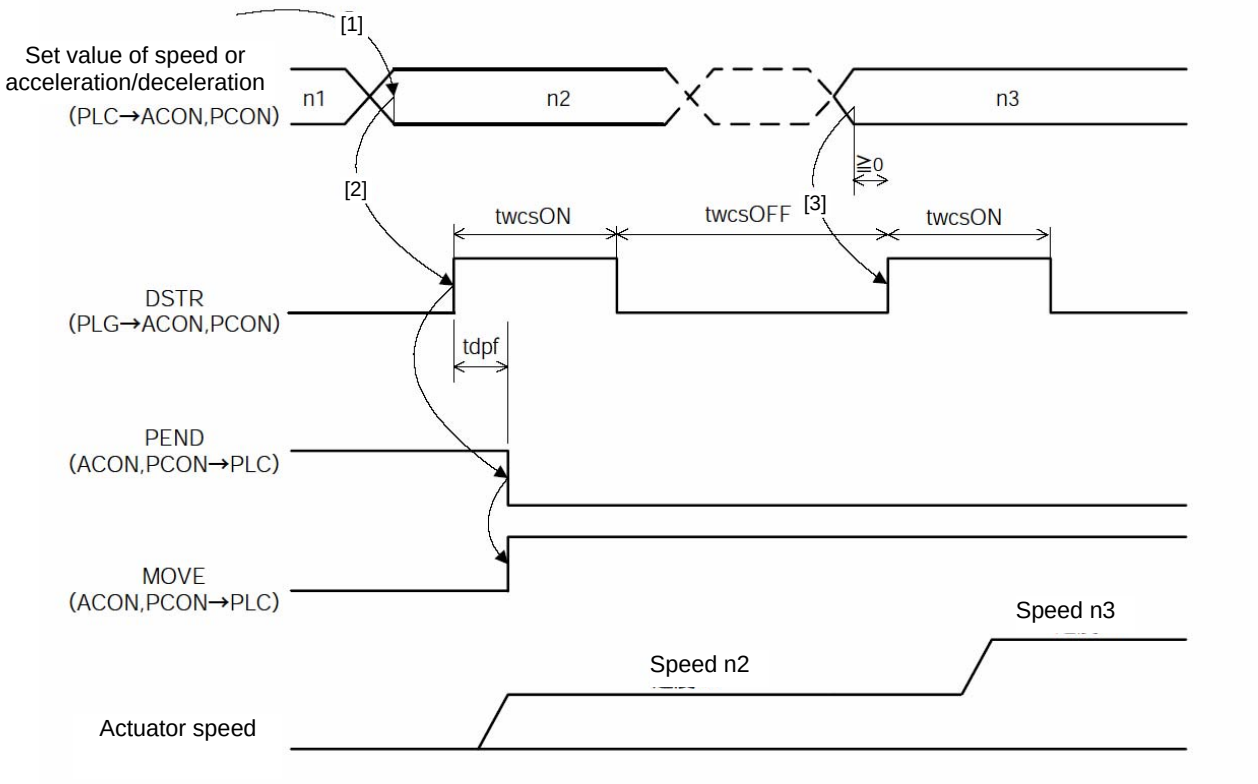

twcsON≧Yt＋Xt＋3 (msec)
twcsOFF≧Yt＋Xt＋3 (msec)
※Yt＋Xt≦tpdf≦Yt＋Xt＋3 (msec)

⚠ Caution

1. If the speed is not set or “0” speed is set, the actuator will remain stationary and no alarm will generate.
2. If the speed is changed to “0” while the actuator is moving, the actuator will decelerate to a stop and no alarm will generate.
3. Even when the acceleration/deceleration or speed data alone is changed while the actuator is moving, the target position data must also be set.
4. Even when the target position alone is changed while the actuator is moving, the acceleration/deceleration and speed data must also be set.

7.10 DeviceNet Parameters

Parameters relating to DeviceNet are Nos. 84, 85 and 90.
Category: C: External interface parameter

No.	Category	Symbol	Name	Factory-set default
1			For parameter Nos. 1 to 83, refer to the operation manual for the controller.	
~				
83				
84	C	FMOD	Fieldbus operation mode	0
85	C	NADR	Fieldbus node address	63
86	C	FBRS	Field bus baud rate	0
87	C	NTYP	Network type	1
90	C	FMIO	Fieldbus I/O format	3

- Fieldbus operation mode (No. 84, FMOD)

Specify the operation mode in parameter No. 84 using a value between 0 and 4.

Value set in parameter No. 84	Mode	Number of occupied channels	Description
0 (Factory setting)	Remote I/O mode	1CH	Operation using PIOs (24-V I/Os) is performed via DeviceNet.
1	Position/simple direct mode	4CH	The actuator can be operated by specifying the target position directly and numerically or based on a value in the position data table. Other values required for operation are set in the position data table.
2	Half direct mode	8CH	The actuator is operated by specifying all data other than the target position, such as speed, acceleration/deceleration, push-motion current, directly and numerically.
3	Full direct mode	16CH	The actuator is operated by directly specifying all values relating to position control.
4	Remote I/O mode 2	6CH	The functions available in the remote I/O mode are combined with the current-position read mode and current-speed read mode.

- Fieldbus node address (No. 85, NADR)

Specify the node address of the remote station in parameter No. 85.

Setting range: 0 to 63 (The factory setting is “63.”)

- Fieldbus baud rate (No. 86, FBRS)

The baud rate is automatically set to the same value as the baud rate set in the master. Accordingly, you need not set the baud rate.

● Network type (No. 87, NTYP)
The network module type is specified in parameter No. 87. Do not change the default setting.

● Fieldbus I/O format (No. 90, FMIO)
Addresses in the PLC are assigned in units of 16 points (1 channel) based on the node address set in the controller and number of occupied channels in each operation mode.
By changing the setting of parameter No. 90, data elements can be swapped within a boundary of two words or less in units of bytes during communication using the I/O areas of the PLC.

Value set in parameter No. 90	Description
3 (factory setting)	Data is not swapped. The data is sent directly to the PLC. (Refer to Example i.)
2	The upper byte and lower byte comprising the upper word are swapped, and the upper byte and lower byte comprising the lower word are also swapped. (Refer to Example ii.
1	The upper word and lower word are swapped for word registers. (Refer to Example iii.)
0	The upper byte and lower byte comprising the upper word are swapped, and the upper byte and lower byte comprising the lower word are also swapped. In addition, the upper word and lower word are swapped for word registers. (Refer to Example iv.)

(Example i) Set value = “3” ● indicates ON, while O indicates OFF.

ACON、PCON Input register	1F	1E	1D	1C	1B	1A	19	18	17	16	15	14	13	12	11	10	F	E	D	C	B	A	9	8	7	6	5	4	3	2	1	0
ON／OFF	○	○	○	●	○	○	●	○	○	○	●	●	○	●	○	○	●	○	●	○	●	○	●	●	●	●	○	○	●	●	○	●
Hexa-decimal data	1				2				3				4				A				B				C				D			

⇧

PLC：Output channel	1F	1E	1D	1C	1B	1A	19	18	17	16	15	14	13	12	11	10	F	E	D	C	B	A	9	8	7	6	5	4	3	2	1	0
ON／OFF	○	○	○	●	○	○	●	○	○	○	●	●	○	●	○	○	●	○	●	○	●	○	●	●	●	●	○	○	●	●	○	●
Hexa-decimal data	1				2				3				4				A				B				C				D			

ACON、PCON Output register	1F	1E	1D	1C	1B	1A	19	18	17	16	15	14	13	12	11	10	F	E	D	C	B	A	9	8	7	6	5	4	3	2	1	0
ON／OFF	○	○	○	●	○	○	●	○	○	○	●	●	○	●	○	○	●	○	●	○	●	○	●	●	●	●	○	○	●	●	○	●
Hexa-decimal data	1				2				3				4				A				B				C				D			

⇩

PLC：Input channel	1F	1E	1D	1C	1B	1A	19	18	17	16	15	14	13	12	11	10	F	E	D	C	B	A	9	8	7	6	5	4	3	2	1	0
ON／OFF	○	○	○	●	○	○	●	○	○	○	●	●	○	●	○	○	●	○	●	○	●	○	●	●	●	●	○	○	●	●	○	●
Hexa-decimal data	1				2				3				4				A				B				C				D			

(Example ii) Set value = “2” ● indicates ON, while O indicates OFF.

ACON、PCON Input register	1F	1E	1D	1C	1B	1A	19	18	17	16	15	14	13	12	11	10	F	E	D	C	B	A	9	8	7	6	5	4	3	2	1	0
ON／OFF	○	○	●	●	○	●	○	○	○	○	○	●	○	○	●	○	●	●	○	○	●	●	○	●	●	○	●	○	●	○	●	●
Hexa-decimal data	3				4				1				2				C				D				A				B			

PLC：Output channel	1F	1E	1D	1C	1B	1A	19	18	17	16	15	14	13	12	11	10	F	E	D	C	B	A	9	8	7	6	5	4	3	2	1	0
ON／OFF	○	○	○	●	○	○	●	○	○	○	●	●	○	●	○	○	●	○	●	○	●	○	●	●	●	●	○	○	●	●	○	●
Hexa-decimal data	1				2				3				4				A				B				C				D			

ACON、PCON Output register	1F	1E	1D	1C	1B	1A	19	18	17	16	15	14	13	12	11	10	F	E	D	C	B	A	9	8	7	6	5	4	3	2	1	0
ON／OFF	○	○	●	●	○	●	○	○	○	○	○	●	○	○	●	○	●	●	○	○	●	●	○	●	●	○	●	○	●	○	●	●
Hexa-decimal data	3				4				1				2				C				D				A				B			

PLC：Input channel	1F	1E	1D	1C	1B	1A	19	18	17	16	15	14	13	12	11	10	F	E	D	C	B	A	9	8	7	6	5	4	3	2	1	0
ON／OFF	○	○	○	●	○	○	●	○	○	○	●	●	○	●	○	○	●	○	●	○	●	○	●	●	●	●	○	○	●	●	○	●
Hexa-decimal data	1				2				3				4				A				B				C				D			

(Example iii) Set value = “1”

● indicates ON, while O indicates OFF.

ACON、PCON Input register	1F	1E	1D	1C	1B	1A	19	18	17	16	15	14	13	12	11	10	F	E	D	C	B	A	9	8	7	6	5	4	3	2	1	0
ON／OFF	●	O	●	O	●	O	●	●	●	●	O	O	●	●	O	●	O	O	O	●	O	O	●	O	O	O	●	●	O	●	O	O
Hexa-decimal data	A				B				C				D				1				2				3				4			

PLC：Output channel	1F	1E	1D	1C	1B	1A	19	18	17	16	15	14	13	12	11	10	F	E	D	C	B	A	9	8	7	6	5	4	3	2	1	0
ON／OFF	O	O	O	●	O	O	●	O	O	O	●	●	O	●	O	O	●	O	●	O	●	O	●	●	●	●	O	O	●	●	O	●
Hexa-decimal data	1				2				3				4				A				B				C				D			

ACON、PCON Output register	1F	1E	1D	1C	1B	1A	19	18	17	16	15	14	13	12	11	10	F	E	D	C	B	A	9	8	7	6	5	4	3	2	1	0
ON／OFF	●	O	●	O	●	O	●	●	●	●	O	O	●	●	O	●	O	O	O	●	O	O	●	O	O	O	●	●	O	●	O	O
Hexa-decimal data	A				B				C				D				1				2				3				4			

PLC：Input channel	1F	1E	1D	1C	1B	1A	19	18	17	16	15	14	13	12	11	10	F	E	D	C	B	A	9	8	7	6	5	4	3	2	1	0
ON／OFF	O	O	O	●	O	O	●	O	O	O	●	●	O	●	O	O	●	O	●	O	●	O	●	●	●	●	O	O	●	●	O	●
Hexa-decimal data	1				2				3				4				A				B				C				D			

(Example iv) Set value = “0”

● indicates ON, while O indicates OFF.

ACON、PCON Input register	1F	1E	1D	1C	1B	1A	19	18	17	16	15	14	13	12	11	10	F	E	D	C	B	A	9	8	7	6	5	4	3	2	1	0
ON／OFF	●	●	○	○	●	●	○	●	●	○	●	○	●	○	●	●	○	○	●	●	○	●	○	○	○	○	○	●	○	○	●	○
Hexa-decimal data	C				D				A				B				3				4				1				2			

PLC：Output channel	1F	1E	1D	1C	1B	1A	19	18	17	16	15	14	13	12	11	10	F	E	D	C	B	A	9	8	7	6	5	4	3	2	1	0
ON／OFF	○	○	○	●	○	○	●	○	○	○	●	●	○	●	○	○	●	○	●	○	●	○	●	●	●	●	○	○	●	●	○	●
Hexa-decimal data	1				2				3				4				A				B				C				D			

ACON、PCON Output register	1F	1E	1D	1C	1B	1A	19	18	17	16	15	14	13	12	11	10	F	E	D	C	B	A	9	8	7	6	5	4	3	2	1	0
ON／OFF	●	●	○	○	●	●	○	●	●	○	●	○	●	○	●	●	○	○	●	●	○	●	○	○	○	○	○	●	○	○	●	○
Hexa-decimal data	C				D				A				B				3				4				1				2			

PLC：Input channel	1F	1E	1D	1C	1B	1A	19	18	17	16	15	14	13	12	11	10	F	E	D	C	B	A	9	8	7	6	5	4	3	2	1	0
ON／OFF	○	○	○	●	○	○	●	○	○	○	●	●	○	●	○	○	●	○	●	○	●	○	●	●	●	●	○	○	●	●	○	●
Hexa-decimal data	1				2				3				4				A				B				C				D			

7.11 Troubleshooting

- Alarm messages, causes and remedial actions

If an alarm occurs, a corresponding simple alarm code will be indicated by the completed position number (four bits of PM1 to PM8) in the remote I/O mode and remote I/O mode 2.
In the position/simple direct mode, this simple alarm code is output to the (n+2) channel.
In the half direct mode and full direct mode, this simple alarm code is output to the (n+6) channel.

[1] Check the generated alarm code using the monitor function of the PLC, etc., or connect the RC PC software or teaching pendant and check the code on the status monitor screen.
[2] Look up the applicable alarm code in the alarm list provided in the operation manual for the controller.
[3] Take appropriate actions according to the explanation given for the applicable code.
For the alarm codes listed in the table below, take the specified action.

Code	Error name	ID (*1)	RES (*2)	Cause/action
0F2	Fieldbus module error	05	X	Cause: A fieldbus module error has been detected. Action: Check the parameter.
0F3	Fieldbus module not detected	04	X	Cause: The module could not be detected. Action: Reconnect the power. If the error persists, contact IAI.

(*1) ID → Simple alarm code
(*2) RES → Whether or not the alarm can be reset = O: Alarm can be set / X: Alarm cannot be reset

8. Troubleshooting

If you encountered a problem concerning DeviceNet, check the operating condition using the table below and remove the cause of the problem. The monitor LEDs, MS and NS, illuminate in two colors (red and green), and you can check the condition of DeviceNet based on the illumination status and color of each LED.

If an error occurred, MS or NS should change to steady or blinking red. If you spot a steady or blinking red light, check (reconfigure) the connections of the power supply and communication cable, DIP switch settings, parameter settings (X-SEL), etc., and then reconnect the power.

○: Steady light, ●: Blinking, ⦿: Off

Monitor LEDs				Condition	Remedial action
MS		NS			
Grn	Red	Grn	Red		
○	-	○	-	Operating normally	
○	-	●	●	Waiting for completion of node address duplication check by the master.	• Confirm that the baud rate of the master is the same as the baud rates of all slaves. If not, correct the applicable settings and then restart the system. • Confirm that the connectors are connected correctly. • Confirm that the communication power (24 VDC) is supplied. • Confirm that the master is operating correctly. • Confirm that the communication cable is not broken.
○	-	⦿	-	Waiting for connection to be established with the master.	• Confirm that the master is operating correctly. • Confirm that the applicable slave is registered in the master scan list.
-	○	●	●	A hardware error occurred.	• Contact IAI. (The DeviceNet board may have to be replaced.)
-	⦿	●	●	Incorrect DIP switch setting.	• Confirm that the baud rate of the slave is the same as the baud rate of the master. • Confirm that the configuration is correct. • After correcting the applicable settings, restart the system.
○	-	-	○	Detected a node address duplication or bus-off state (communication was stopped due to frequent data errors).	• Correct the node address, and then restart the system. • Confirm that the baud rate of the slave is the same as the baud rate of the master. • Confirm that the communication cable length is appropriate. • Check the communication cable for wire breakage or loose or disconnected connector. • Confirm that the terminal resistors are installed correctly. • Confirm that no noise sources are located nearby, that the communication cable is not wired in parallel with any power line, and that the system is not otherwise affected by noise. • After correcting the applicable settings, restart the system.
○	-	-	⦿	A communication time out occurred.	• Confirm that the baud rate of the slave is the same as the baud rate of the master. • Confirm that the communication cable length is appropriate. • Check the communication cable for wire breakage or loose or disconnected connector. • Confirm that the terminal resistors are installed correctly. • Confirm that no noise sources are located nearby, that the communication cable is not wired in parallel with any power line, and that the system is not otherwise affected by noise. • After correcting the applicable settings, restart the system.
NS switches repeatedly between steady green and blinking green. Or, NS switches repeatedly between blinking red and blinking green.				A communication error occurred.	• Confirm that the applicable slave is registered in the master scan list. • Confirm that any of the I/O area is not used by other slave. • Confirm that the I/O area does not exceed the area permitted for use by the master unit (in the case of fixed assignment).

9. Common Items and Others

9.1 Communication Cable

For the DeviceNet communication cable, use a dedicated 5-wire DeviceNet cable conforming to the DeviceNet Specification. There are two types of dedicated cables: large size and small size.
(Note) Take note that if a small-size cable is used, the maximum network length becomes 100 m or less regardless of the baud rate setting.

Cables by Omron or SWCC Showa Holdings

Item	Large-size cable (thick cable)		Small-size cable (thin cable)	
	Signal line	Power line	Signal line	Power line
Model	DCA2-5C10, TDN18 series		DCA1-5C10, TDN24 series	
Conductor cross-section area	0.86 mm^2	2.17 mm^2	0.20 mm^2	0.38 mm^2
Conductor outer diameter	1.21 mm	1.92 mm	0.60 mm	0.80 mm
Color	Blue, white	Red, black	Blue, white	Red, black
Impedance	120 Ω ± 10%	-	120 Ω ± 10%	-
Propagation delay	1.36 ns/ft	-	1.36 ns/ft	-
Attenuation ratio	500 kHz: 0.25 dB/ft 125 kHz: 0.13 dB/ft	-	500 kHz: 0.50 dB/ft 125 kHz: 0.29 dB/ft	-
Conductor resistance (at 20°C)	6.9 Ω/1000 ft 22.6 Ω/1000 m	2.7Ω/1000 ft 8.9Ω/1000 m	28 Ω/1000 ft 91.9 Ω/1000 m	17.5 Ω/1000 ft 57.4 Ω/1000 m
Maximum current	-	8A	-	3A
Outer diameter of finished cable	11.2 ~ 12.1 mm		6.9 mm	

Cables by Allen-Bradley

Item	Large-size cable (thick cable)		Small-size cable (thin cable)	
	Signal line	Power line	Signal line	Power line
Model	1485C-P1-A50		1485C-P1-C50	
Conductor cross-section area	0.82 mm^2	1.65 mm^2	0.20 mm^2	0.33 mm^2
Conductor outer diameter	1.17 mm	1.68 mm	0.60 mm	0.79 mm
Color	Blue, white	Red, black	Blue, white	Red, black
Impedance	120 Ω ± 10%	-	120 Ω ± 10%	-
Propagation delay	1.36 ns/ft	-	1.36 ns/ft	-
Attenuation ratio	500 kHz: 0.25 dB/ft 125 kHz: 0.13 dB/ft	-	500 kHz: 0.50 dB/ft 125 kHz: 0.29 dB/ft	-
Conductor resistance	6.9Ω/1000 ft 22.6Ω/1000 m	3.6Ω/1000 ft 11.8Ω/1000 m	28 Ω/1000 ft 91.9 Ω/1000 m	17.5 Ω/1000 ft 57.4 Ω/1000 m
Maximum current	-	8A	-	3A
Outer diameter of finished cable	11.2 ~ 12.1 mm		6.9 mm	

9.2 Connection of Communication Cable Connector

Connect the communication cable in accordance with the connector table below.

Pin No.	Cable wire color	Signal name	Description
1	Black	V-	Network power supply -
2	Blue	CAN_L	Signal wire, differential -
3	Shield	Drain	Drain (shield)
4	White	CAN_H	Signal wire, differential +
5	REd	V+	Network power supply +

Color-coded seals corresponding to the cable wire colors shown in the table above are attached on the supplied cable-end connector.

9.3 Power Supply Connection and Terminal Resistor

9.3.1 Power Supply Connection

The DeviceNet system supplies power to the network.
The supply voltage is 24 VDC, which is applied between the terminals for red (V+) and black (V-) wires in the main line (5-wire cable).
Use a dedicated power tap or T-junction tap to connect the power supply directly to the communication cable connector.

9.3.2 Terminal Resistor

A terminal resistor must be connected on both ends of the main DeviceNet line.
X-SEL, RCS-C and E-Con controllers have no built-in terminal resistors.
To connect a terminal resistor, prepare a dedicated terminal-block type terminal resistor (121 Ω ± 1%, 1/4 W) or terminal resistor with T-junction tap (121 Ω ± 1%, 1/4 W), or other resistor of equivalent specification, and connect it directly to the communication cable connector.

(Note) For details, refer to the operation manual for the master unit.

9.4 Useful Functions You Should Know When Adjusting an X-SEL Controller

(1) In the case of an X-SEL K-type controller in which a standard or expansion I/O board is installed, the X-SEL controller can be started on its own without connecting a 24-VDC I/O power supply.
(2) If a DeviceNet board is installed, the X-SEL controller can be started on its own before network connection is established.

In either case, the applicable parameters (I/O Parameter Nos. 10 to 13) must be set to “0: Do not monitor.”
(Note) After the necessary operation or adjustment is completed, be sure to reset the parameters to their original settings. If the parameters are not reset, error check will not be performed for the board in each applicable slot.

10. EDS File

All X-SEL controllers come with a floppy disk containing an EDS file. To have the master unit recognize the X-SEL controller and automatically configure the applicable settings using a configurator, install the EDS file in the PC. The EDS file can also be downloaded from IAI's website specified below. RCS-C, E-Con, ACON, PCON, SCON and SSEL controllers do not come with this floppy disk. If you need an EDS file for any of these controllers, download it from IAI's website.

Website: http://www.iai-robot.co.jp

Reference

Using Omron's configurator

1. Install the EDS file in the configurator.
   On an X-SEL controller, the EDS file is installed under the name "AnyBus-S DeviceNet" in the "Communications Adapter" subfolder located in the "HMS Fieldbus Systems AB" folder.
   On an RCS-C, E-Con or SCON controller, the EDS file is installed under the name "RCS-C-DV," "ECON-C-DV" or "S-CON-C-DV," respectively, in the "Generic Device" subfolder located in the "IAI Corporation" folder.
   On an SSEL, ACON or PCON controller, the EDS file is installed under the name "IAFD3803" (same for all three models) in the "Generic Device" subfolder located in the "IAI Corporation" folder.

2. Build and set up a network using the configurator.
   On an X-SEL controller, use the EDS file to perform the necessary settings.
   On an RCS-C, E-Con or SCON controller, 16 input points and 16 output points (fixed) are set as remote I/Os. It is also possible to set I/Os offline and then upload the settings. If the I/Os of the applicable device are fixed, uploading different settings will automatically set a number of bytes that can be used to store I/O property information.

[Setting for X-SEL, TT, SSEL, ACON or PCON controller]

(1) For an X-SEL, TT, SSEL, ACON or PCON controller, use the EDS file to set the number of bytes to be used to store I/O property information.
The number of bytes should correspond to the available I/O ports set by the applicable I/O parameters in the X-SEL, TT or SSEL controller.
For an ACON or PCON controller, set a value corresponding to twice the number of occupied channels in each operation mode. (1 channel = 1 word = 2 bytes).
If the EDS file has been installed in a PC, the necessary settings can be done offline and then uploaded.

(2) After the settings are complete, open the parameter window in the master (PLC). The applicable device should be found in the unregistered device list. Register the device in the registered device list.
(Note) Whether or not to select "Enable automatic assignment upon registration" should be determined in accordance with the assignment method selected for the entire system.

(3) If automatic assignment is not enabled at the time of registration, drag the registered device and insert it in the first address of the bytes to be used for I/O assignment. The byte addresses to be used will be assigned automatically. You can also select the edit function to specify the first address.
Repeat this process to set byte addresses for both inputs and outputs.

(4) Download the settings to the PLC.

(5) The X-SEL controller has been registered in the DeviceNet system (master PLC). Perform a final check to confirm that all settings are correct.

Catalog No.: MJ0124-14A

IAI
Quality and Innovation

IAI America, Inc.

Head Office: 2690 W. 237th Street, Torrance, CA 90505
TEL (310) 891-6015 FAX (310) 891-0815
Chicago Office: 1261 Hamilton Parkway, Itasca, IL 60143
TEL (630) 467-9900 FAX (630) 467-9912
Atlanda Office: 1220-E Kenneston Circle, Marrietta, GA 30066
TEL (678) 354-9470 FAX (678) 354-9471

Website: www.intelligentactuator.com

IAI Industrieroboter GmbH

Ober der Röth 4, D-65824 Schwalbach am Taunus, Germany
TEL 06196-88950 FAX 06196-889524