INTELLIGENT ACTUATOR

IAI
Quality and Innovation

X-SEL-P/Q Controller

Operation Manual 4th Edition

X-SEL
CONTROLLER

CE

IAI Industrieroboter GmbH
Ober der Röth 4
D-65824 Schwalbach / Taunus
Phone: +49/6196/8895-0 / Fax: +49/6196/8895-24
E-Mail: info@iai-gmbh.de
Internet: http://www.eu.iai-gmbh.de

Document BA-X-SEL-P/Q
X-SEL-P/Q Controller
Version 4 E, October 2007

www.intelligentactuator.de

INTELLIGENT ACTUATOR	CAUTION

Operator Alarm on Low Battery Voltage

This controller is equipped with the following backup batteries for retention of data in the event of power failure:

[1] System-memory backup battery
For retention of position data, global variables/flags, error list, strings, etc.

[2] Absolute-encoder backup battery (optional)
For retention of rotation data (when an absolute encoder is used)

Since these batteries are not rechargeable, they will be eventually consumed. Unless the batteries are replaced in a timely manner, the voltage will drop to a level where the data can no longer be retained. If a power failure occurs in this condition, the data will be lost. (The life of each battery varies depending on the operating time.)

Once the data is lost, the controller will not operate normally the next time the power is turned on, and recovery will take time.

(Reference)

System-memory backup battery --- An alarm occurs when the voltage drops to approx. 2.6 V and data backup becomes no longer possible at a battery voltage of approx. 2.3 V (rated voltage: 3.0 V).

Absolute-encoder backup battery --- An alarm occurs when the voltage drops to approx. 3.2 V and data backup becomes no longer possible at a battery voltage of approx. 2.7 V (rated voltage: 3.6 V).

To prevent this problem, this controller can output a low battery voltage alarm from its I/O port.
To output this alarm signal from an I/O port, you must set the applicable I/O parameter.

- Alarm output for the system-memory backup battery
  Set I/O parameter No. 59 to “1” --- Output port No. 313 (*) will be assigned as a dedicated port.
- Alarm output for the absolute-encoder backup battery
  Set I/O parameter No. 60 to “1” --- Output port No. 314 (*) will be assigned as a dedicated port.

(*) Once set as an alarm output port, the applicable port can no longer be used as a general-purpose port.

It is recommended that this function be utilized to prevent unnecessary problems resulting from low battery voltage (consumption of battery life).
In particular, the person in charge of system design should utilize this function to provide a design means for issuing an operator alarm using an output signal from an I/O port, while the person in charge of electrical design should provide an electrical means for achieving the same effect.
For the battery replacement procedure, refer to the applicable section in the operating manual.

It is recommended that you always backup the latest data to a PC in case of voltage drop in the system-memory battery or unexpected controller failure.

About teaching pendant and PC software

Q type controllers only support the following teaching pendant and PC software:

Teaching pendant: IA-T-XA (ANSI type)

PC software: IA-101-XA-MW (Supplied with category 4 cable)

INTELLIGENT ACTUATOR	CAUTION

Drive-Source Cutoff Relay Error (Detection of Fused Relay: E6D)

As a condition limited to X-SEL-P type controllers of standard single-phase specification, a “drive-source cutoff relay error (E6D)” may generate if the power is turned off and then turned on again (reconnected) too quickly. This error indicates that the internal relay has fused, and its occurrence has to do with the specific circuit configuration of the above controller type.
Although the specific wait time varies depending on the input voltage and number of external regenerative resistors connected, as a general guide wait for at least 40 seconds before reconnecting the power.

Safety Precautions

Please read the information in “Safety Precautions” carefully before selecting a model and using the product.

The precautions described below are designed to help you use the product safely and avoid bodily injury and/or property damage.

Directions are classified as “danger,” “warning,” “caution” and “note,” according to the degree of risk.

Danger	Failure to observe the instruction will result in an imminent danger leading to death or serious injury.
Warning	Failure to observe the instruction may result in death or serious injury.
Caution	Failure to observe the instruction may result in injury or property damage.
Note	The user should take heed of this information to ensure the proper use of the product, although failure to do so will not result in injury.

This product has been designed and manufactured as a component for use in general industrial machinery.

Devices must be selected and handled by a system designer, personnel in charge of the actual operation using the product or similar individual with sufficient knowledge and experience, who has read both the catalog and operation manual (particularly the “Safety Precautions” section). Mishandling of the product poses a risk.

Please read the operation manuals for all devices, including the main unit and controller.

It is the user’s responsibility to verify and determine the compatibility of this product with the user’s system, and to use them properly.

After reading the catalog, operation manual and other materials, be sure to keep them in a convenient place easily accessible to the personnel using this product.

When transferring or loaning this product to a third party, be sure to attach the catalog, operation manual and other materials in a conspicuous location on the product, so that the new owner or user can understand its safe and proper use.

The danger, warning and caution directions in this “Safety Precautions” do not cover every possible case. Please read the catalog and operation manual for the given device, particularly for descriptions unique to it, to ensure its safe and proper handling.

Danger

[General]

- Do not use this product for the following applications:
  1. Medical equipment used to maintain, control or otherwise affect human life or physical health
  2. Mechanisms and machinery designed for the purpose of moving or transporting people
  3. Important safety parts of machinery

  This product has not been planned or designed for applications requiring high levels of safety. Use of this product in such applications may jeopardize the safety of human life. The warranty covers only the product as it is delivered.

[Installation]

- Do not use this product in a place exposed to ignitable, inflammable or explosive substances. The product may ignite, burn or explode.
- Avoid using the product in a place where the main unit or controller may come in contact with water or oil droplets.
- Never cut and/or reconnect the cables supplied with the product for the purpose of extending or shortening the cable length. Doing so may result in fire.

[Operation]

- If you are using a pace maker or other mechanical implant, do not come within one meter of the product. The strong magnetic field generated by the product may cause the pace maker, etc., to malfunction.
- Do not pour water onto the product. Spraying water over the product, washing it with water or using it in water may cause the product to malfunction, resulting in injury, electric shock, fire, etc.

[Maintenance, Inspection, Repair]

- Never modify the product. Unauthorized modification may cause the product to malfunction, resulting in injury, electric shock, fire, etc.
- Do not disassemble and reassemble the components relating to the basic structure of the product or its performance and function. Doing so may result in injury, electric shock, fire, etc.

⚠ Warning

[General]

- Do not use the product outside the specifications. Using the product outside the specifications may cause it to fail, stop functioning or sustain damage. It may also significantly reduce the service life of the product. In particular, observe the maximum loading capacity and speed.

[Installation]

- If the machine will stop in the case of system problem such as emergency stop or power failure, design a safety circuit or other device that will prevent equipment damage or injury.
- Be sure to provide Class D grounding for the controller and actuator (formerly Class 3 grounding: Grounding resistance at 100 Ω or less). Leakage current may cause electric shock or malfunction.
- Before supplying power to and operating the product, always check the operation area of the equipment to ensure safety. Supplying power to the product carelessly may cause electric shock or injury due to contact with the moving parts.
- Wire the product correctly by referring to the operation manual. Securely connect the cables and connectors so that they will not be disconnected or come loose. Failure to do so may cause the product to malfunction or cause fire.

[Operation]

- Do not touch the terminal block or various switches while the power is supplied to the product. Failure to observe this instruction may result in electric shock or malfunction.
- Before operating the moving parts of the product by hand (for the purpose of manual positioning, etc.), confirm that the servo is turned off (using the teaching pendant). Failure to observe this instruction may result in injury.
- The cables supplied with the product are flexible, but they are not robot cables. Do not store the cables in a movable cable duct (cable bearer, etc.) that bends more than the specified bending radius.
- Do not scratch the cables. Scratching, forcibly bending, pulling, winding, crushing with heavy object or pinching a cable may cause it to leak current or lose continuity, resulting in fire, electric shock, malfunction, etc.

- If the product is generating heat, smoke or a strange smell, turn off the power immediately. Continuing to use the product may result in product damage or fire.
- If any of the internal protective devices (alarms) of the product has actuated, turn off the power immediately. Continuing to use the product may result in product damage or injury due to malfunction. Once the power supply is cut off, investigate and remove the cause and then turn on the power again.
- If the LEDs on the product do not illuminate after turning on the power, turn off the power immediately. The protective device (fuse, etc.) on the live side may remain active. Request repair to the IAI sales office from which you purchased the product.

[Maintenance, Inspection, Repair]

- Before conducting maintenance/inspection, parts replacement or other operations on the product, completely shut down the power supply. At this time, take the following measures:
  1. Display a sign that reads, “WORK IN PROGRESS. DO NOT TURN ON POWER” at a conspicuous place, in order to prevent a person other than the operator from accidentally turning on the power while the operation is working.
  2. When two or more operators are to perform maintenance/inspection together, always call out every time the power is turned on/off or an axis is moved in order to ensure safety.

[Disposal]

- Do not throw the product into fire. The product may burst or generate toxic gases.

⚠ Caution

[Installation]

- Do not use the product under direct sunlight (UV ray), in a place exposed to dust, salt or iron powder, in a humid place, or in an atmosphere of organic solvent, phosphate-ester machine oil, sulfur dioxide gas, chlorine gas, acids, etc. The product may lose its function over a short period of time, or exhibit a sudden drop in performance or its service life may be significantly reduced.
- Do not use the product in an atmosphere of corrosive gases (sulfuric acid or hydrochloric acid), inflammable gases or ignitable liquids. Rust may form and reduce the structural strength or the motor may ignite or explode.
- When using the product in any of the places specified below, provide a sufficient shield. Failure to do so may result in malfunction:
  1. Place where large current or high magnetic field is present
  2. Place where welding or other operations are performed that cause arc discharge
  3. Place subject to electrostatic noise
  4. Place with potential exposure to radiation
- Install the main unit and controller in a place subject to as little dust as possible. Installing them in a dusty place may result in malfunction.
- Do not install the product in a place subject to large vibration or impact (4.9 m/s2 or more). Doing so may result in the malfunctioning of the product.
- Provide an emergency-stop device in a readily accessible position so the device can be actuated immediately upon occurrence of a dangerous situation during operation. Lack of such device in an appropriate position may result in injury.
- Provide sufficient maintenance space when installing the product. Routine inspection and maintenance cannot be performed without sufficient space, which will eventually cause the equipment to stop or the product to sustain damage.
- Do not hold the moving parts of the product or its cables during installation. It may result in injury.
- Always use IAI’s genuine cables for connection between the controller and the actuator. Also use IAI’s genuine products for the key component units such as the actuator, controller and teaching pendant.

- Before installing or adjusting the product or performing other operations on the product, display a sign that reads, “WORK IN PROGRESS. DO NOT TURN ON POWER.” If the power is turned on inadvertently, injury may result due to electric shock or sudden activation of an actuator.

[Operation]

- Turn on the power to individual equipment one by one, starting from the equipment at the highest level in the system hierarchy. Failure to do so may cause the product to start suddenly, resulting in injury or product damage.
- Do not insert a finger or object in the openings in the product. It may cause fire, electric shock or injury.
- Do not bring a floppy disk or other magnetic media within one meter of the product. The magnetic field generated by the magnet may destroy the data in the floppy disk, etc.

[Maintenance, Inspection, Repair]

- When the power was turned off and the cover was opened to replace the battery, etc., do not touch the condenser terminal in the product immediately after the power was turned off (within 30 seconds). Residual voltage may cause electric shock.
- Do not touch the terminals when performing an insulation resistance test. Electric shock may result. (Do not perform any withstand voltage test, since the product uses DC voltage.)

Note

[General]

- If you are planning to use the product under a condition or environment not specified in the catalogs and operation manual, or in an application requiring strict safety such as aircraft facility, combustion system, entertainment machine, safety device or other equipment having significant impact on human life or property, design operating ranges with sufficient margins from the ratings and design specifications or provide sufficient safety measures such as fail-safes. Whatever you do, always consult IAI’s sales representative.

[Installation]

- Do not place objects around the controller that will block airflows. Insufficient ventilation may damage the controller.
- Do not configure a control circuit that will cause the load to drop in case of power failure. Configure a control circuit that will prevent the table or load from dropping when the power to the machine is cut off or an emergency stop is actuated.

[Installation, Operation, Maintenance]

- When handling the product, wear protective gloves, protective goggles, safety shoes or other necessary gear to ensure safety.

[Disposal]

- When the product becomes no longer usable or necessary, dispose of it properly as an industrial waste.

Others

- IAI shall not be liable whatsoever for any loss or damage arising from a failure to observe the items specified in “Safety Precautions.”

CE Mark

1. EC Directives

The EC Directives are a new set of directives issued by the European Commission that are intended to protect the health and safety of users and consumers of products distributed within the EU (European Union) zone, while ensuring free movements of these products within the EU zone. Companies exporting to Europe or having a production facility in Europe must comply with the following directives in order to receive a CE Mark certification for their products.

(1) Low-voltage Directive
The X-SEL-P/Q controllers are designed to comply with the Low-voltage Directive on their own.

(2) EMC Directives
The EMC Directives must be met by the entire equipment, or a combination of IAI's controller and other control devices and electrical components used by the equipment. IAI's approach is to determine representative connection/installation models (conditions), each combining controller(s), actuator(s) and peripheral(s), and ensure that each of these models complies with the EMC Directives. (Refer to 3, "Peripheral Configurations.")

2. Applicable Standards

<Low-voltage Directive>
EN50178 (Electronic equipment used in electrical installations)
<EMC Directives>
EN55011 (Radio interference characteristics of industrial, scientific and medical equipment generating radio frequency)
EN61000-6-2 (Immunity in industrial environment)
EN61000-4-2 (Immunity to electrostatic discharge)
EN61000-4-3 (Immunity to electromagnetic field generated by irradiated radio frequency)
EN61000-4-4 (Electrical first transient/burst immunity test)
EN61000-4-5 (Surge immunity test)
EN61000-4-6 (Immunity test against conductive interference induced by radio-frequency electromagnetic field)
EN61000-4-8 (Immunity test against power-frequency magnetic field)
EN61000-4-11 (Immunity test against voltage dip, momentary power failure and voltage fluctuation)

3. Peripheral Configurations

Three-phase power supply specification

P Type
(Standard Specification)

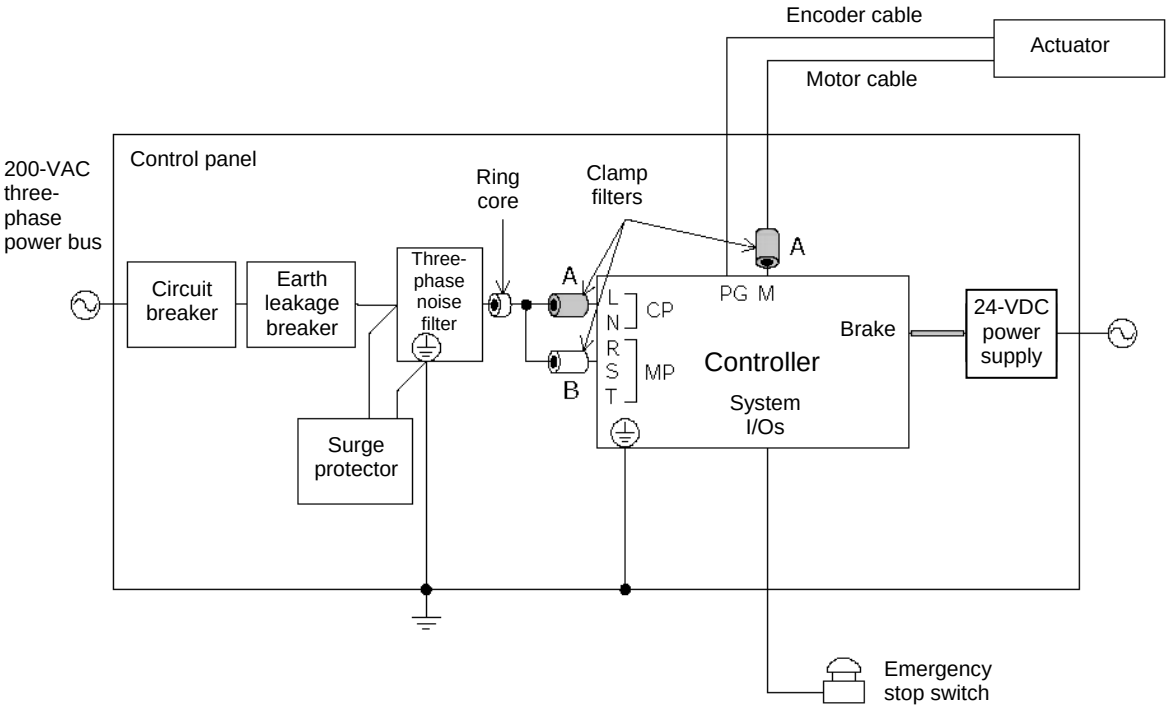

Q Type
(Global Specification)

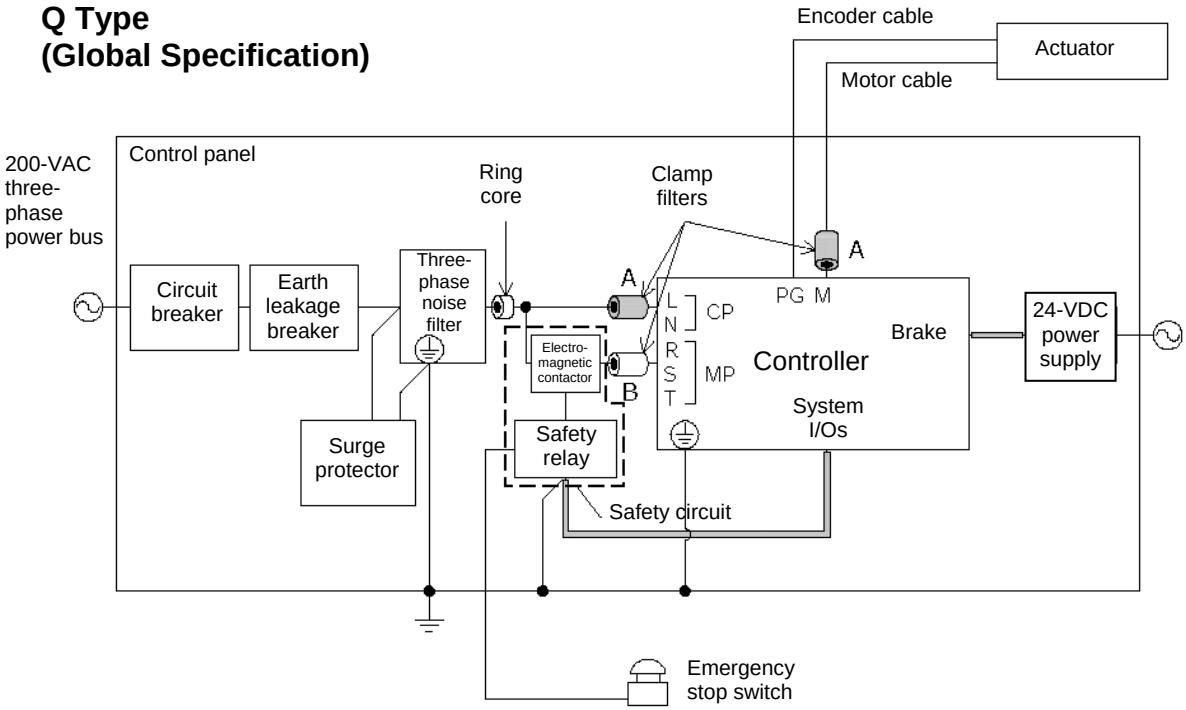

Single-phase power supply specification

P Type
(Standard Specification)

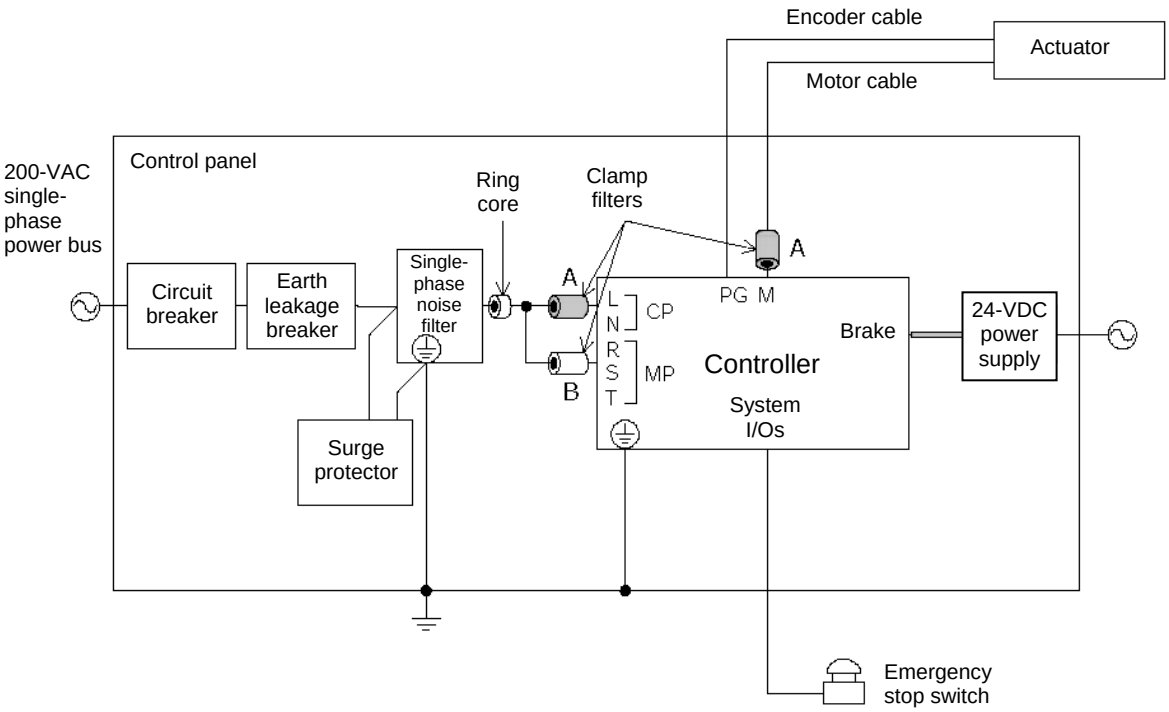

Q Type
(Global Specification)

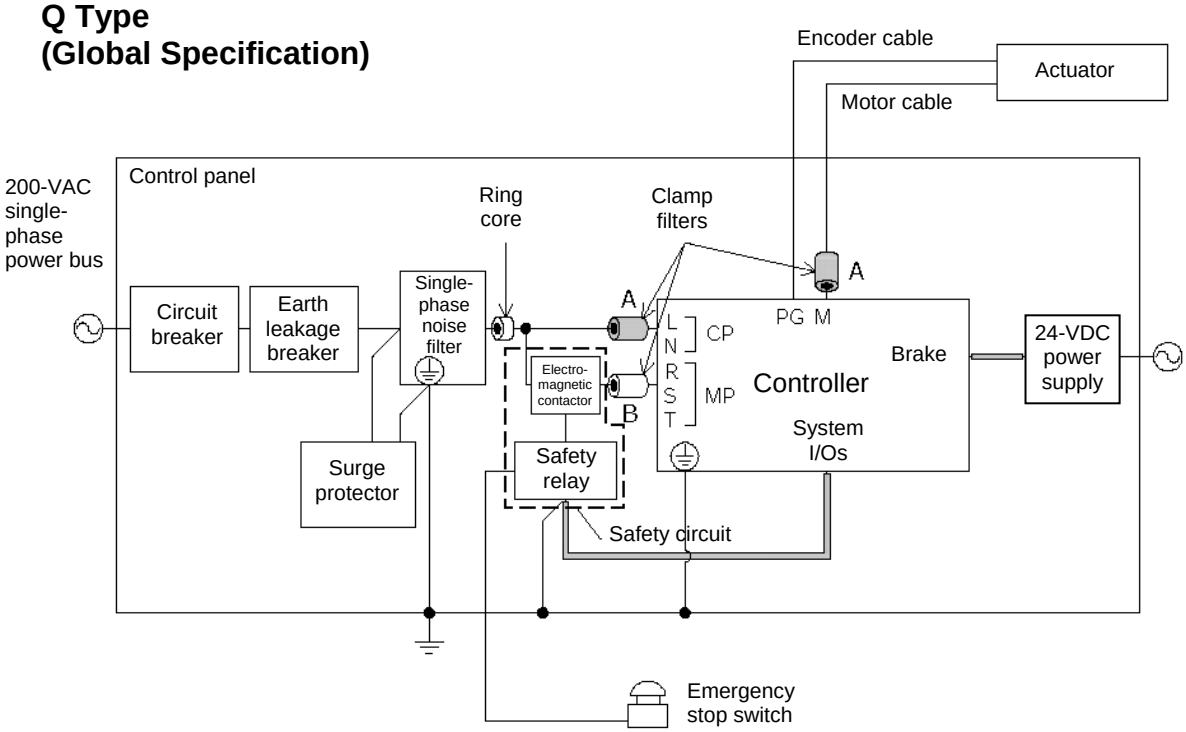

(1) Environment
Use your X-SEL-P/Q controller in an environment conforming to pollution degree 2 or 1 as specified in IEC 60664-1.
Example) Install the controller in a control panel having a structure resistant to intrusion of water, oil, carbon, dust, etc (IP54).

(2) Power Source
A) Use the controller in an environment conforming to overvoltage category II as specified in IEC 60664-1. To meet this requirement, be sure to install a circuit breaker between the distribution board and the X-SEL controller.
B) If the I/O power or electromagnetic brake power is supplied externally, use a 24-VDC power supply bearing a CE Mark.

(3) Grounding
To prevent electric shock, be sure to connect the FG terminal of the X-SEL-P/Q controller and the protective grounding terminal (grounding plate) of the control panel.

(4) Earth Leakage Breaker
Install an earth leakage breaker (residual current device, or RCD) on the primary side of the X-SEL-P/Q controller.

(5) Three-phase Noise Filter
Install a noise filter in the three-phase AC power line.
Supplier: Densei-Lambda
Model: MC1320

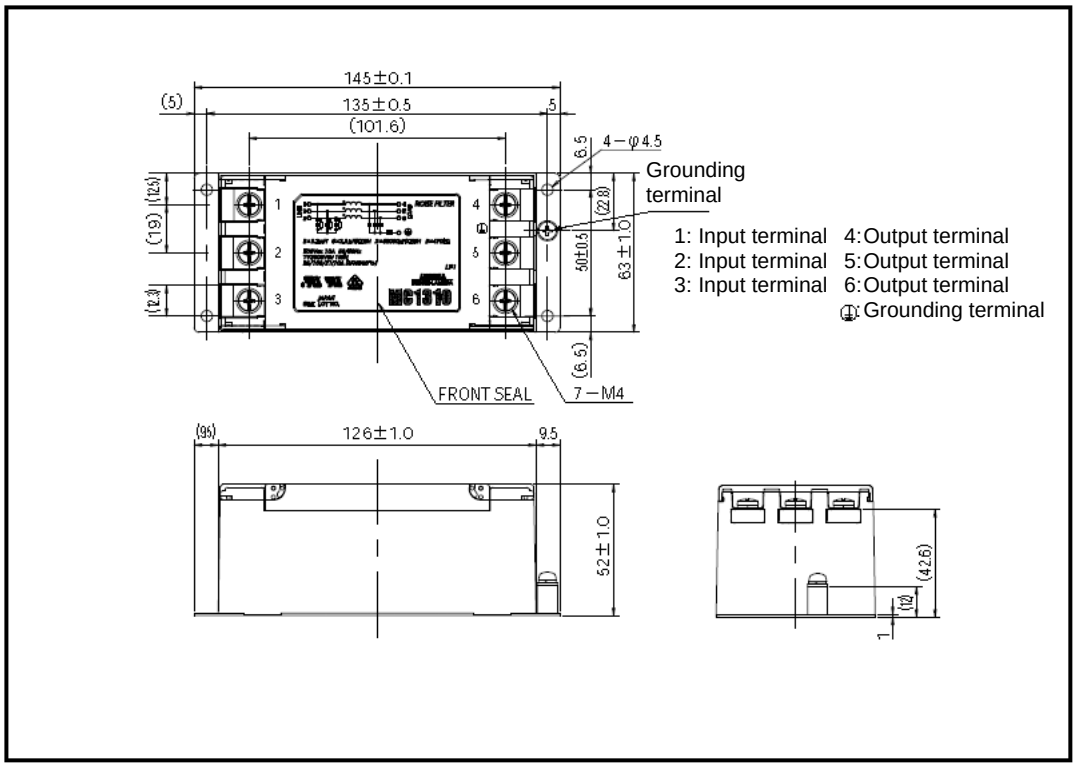

[Fig. 1] External View of Noise Filter (Three-phase Specification)

(6) Single-phase noise filter
Install a noise filter in the single-phase AC power supply line.
Manufacturer: Densei Lambda K.K.
Model: MXB-1220-33

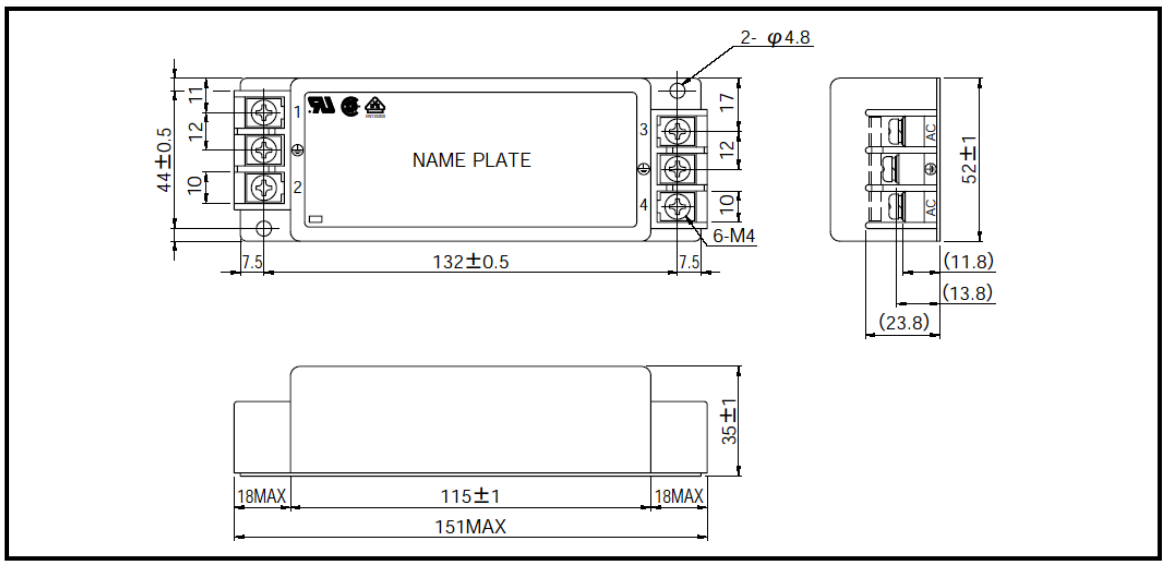

[Fig. 2] External View of Noise Filter (Single-phase Specification)

(7) Ring Core
Install a ring core on the secondary side of the noise filter.
Supplier: NEC Tokin
Model: ESD-R-25

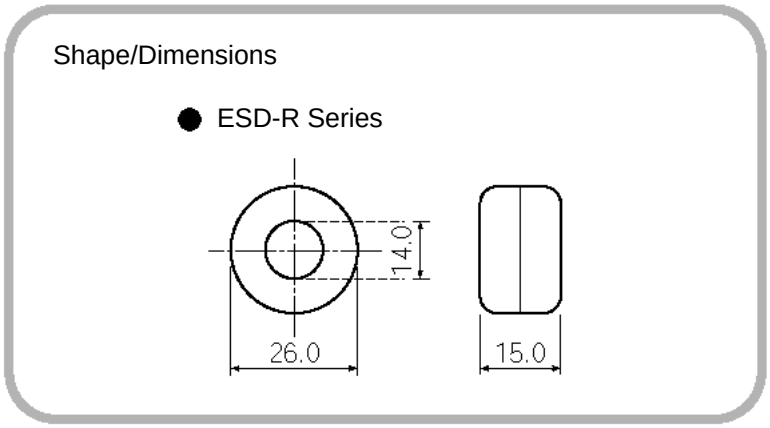

[Fig. 3] External View of Ring Core

(8) Clamp Filter A
Install the following noise filter to the control power AC cable and motor cable (if there are multiple axes, connect to the cables of all axes).
Supplier: TDK
Model: ZCAT3035-1330

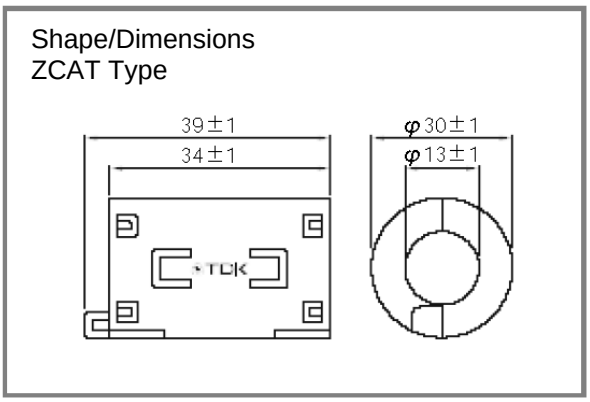

[Fig. 4] External View of Clamp Filter

(9) Clamp Filter B
Install the following noise filter to the motor power AC cable.
Supplier: Kitagawa Industries
Model: RFC-H13

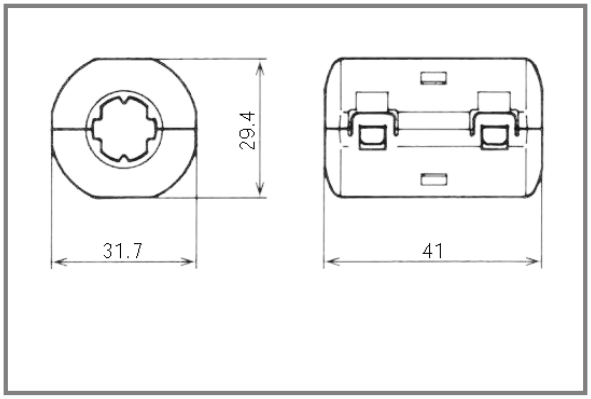

[Fig. 5] External View of Clamp Filter

(10) Surge protector

Install a surge protector on the primary side of the noise filter.

Supplier: Okaya Electric Industries

Model: R·A·V-781BXZ-4 (three-phase)

R·A·V-781BWZ-4 (single-phase)

External Dimensions

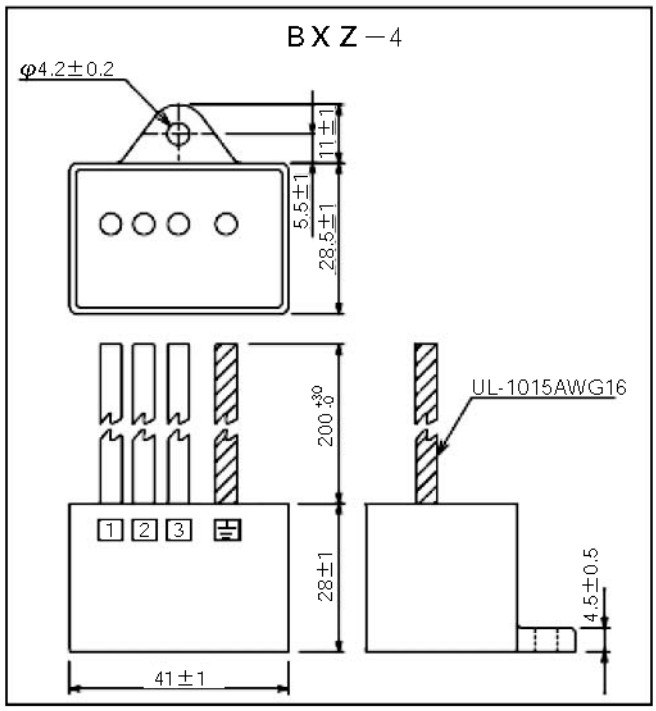

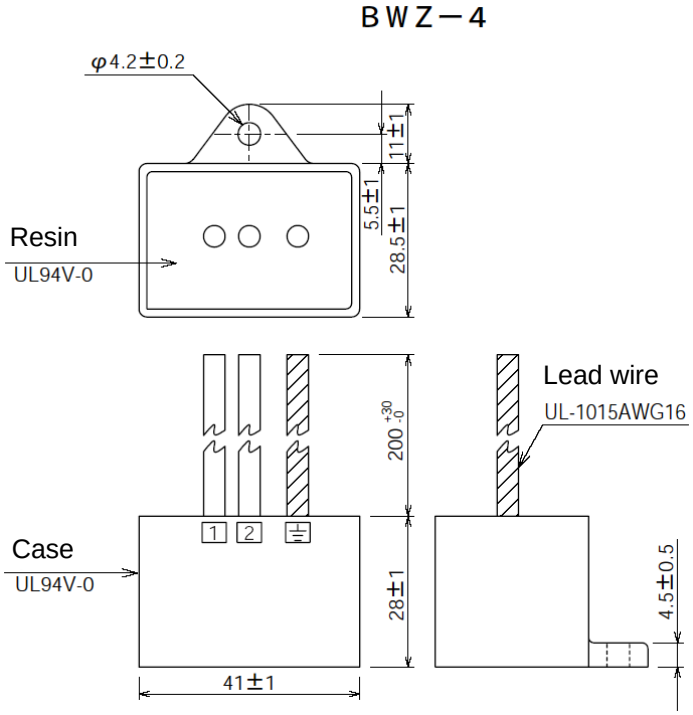

[Fig. 6] External View of Surge Protector

(11) Cables

The restrictions and cautions regarding the cables are summarized below.

A) All cables connected to the X-SEL-P/Q controller, such as the motor cable, encoder cable and various network cables, must be kept to a length below 30 m.

B) For the brake power cable, use a shielded, 2-core (1-pair) twisted paired cable of AWG16 to 24 in wire size and connect the shield to ground on the 24-VDC power supply side.

C) For the system I/O cable connecting the safety relay unit with the X-SEL-Q controller, use a shielded 9-pair twisted paired cable of AWG16 to 24 in wire size and connect the shield to ground via an external safety circuit. No restrictions apply if an emergency stop switch is connected directly to the X-SEL-P controller (where the cable has two cores).

D) If the controller is equipped with a CC-Link unit, use a 110-Ω CC-Link cable of Version 1.10 and install a clamp filter (ZCAT3035-1330) via two turns at a position near the cable connector on the controller end.

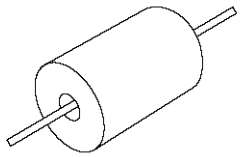

1 turn

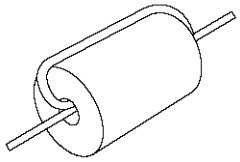

2 turns

E) If the controller is equipped with an Ethernet unit, install a clamp filter (ZCAT3035-1330) via two turns at a position near the controller-end connector of the LAN cable (UTP twisted cable conforming to category 5).

Prohibited Handling of Cables

⚠ Caution

When designing an application system using actuators and controllers, incorrect wiring or connection of each cable may cause unexpected problems such as a disconnected cable or poor contact, or even a runaway system. This section explains prohibited handling of cables. Read the information carefully to connect the cables properly.

Ten Rules for Handling Cables (Must be Observed!)

1. Do not let the cable flex at a single point.

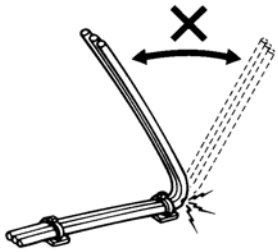

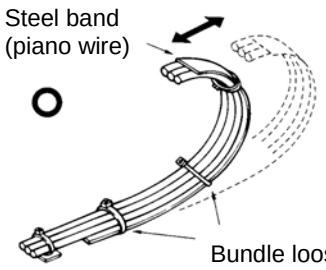

2. Do not let the cable bend, kink or twist.

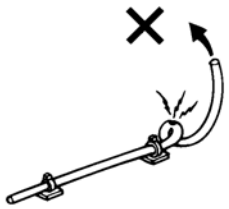

3. Do not pull the cable with a strong force.

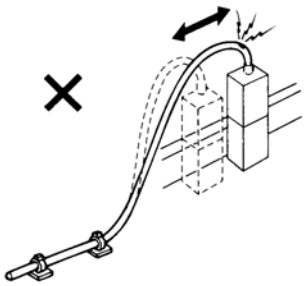

4. Do not let the cable receive a turning force at a single point.

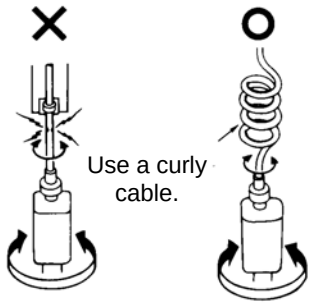

5. When fixing the cable, provide a moderate slack and do not tension it too tight.

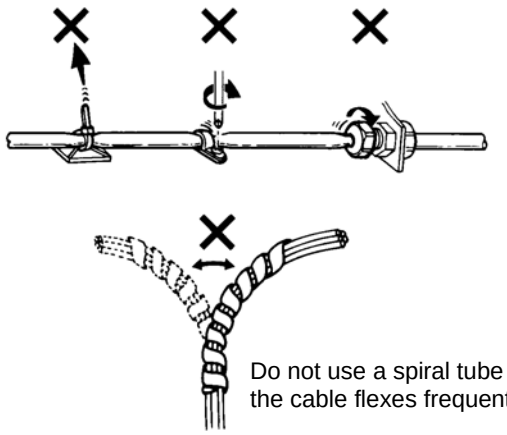

6. Do not pinch, drop a heavy object onto or cut the cable.

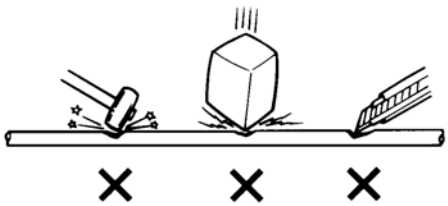

7. Do not let the cable get tangled or kinked in a cable bearer or flexible tube. When bundling the cable, keep a certain degree of flexibility (so that the cable will not become too taut when bent).

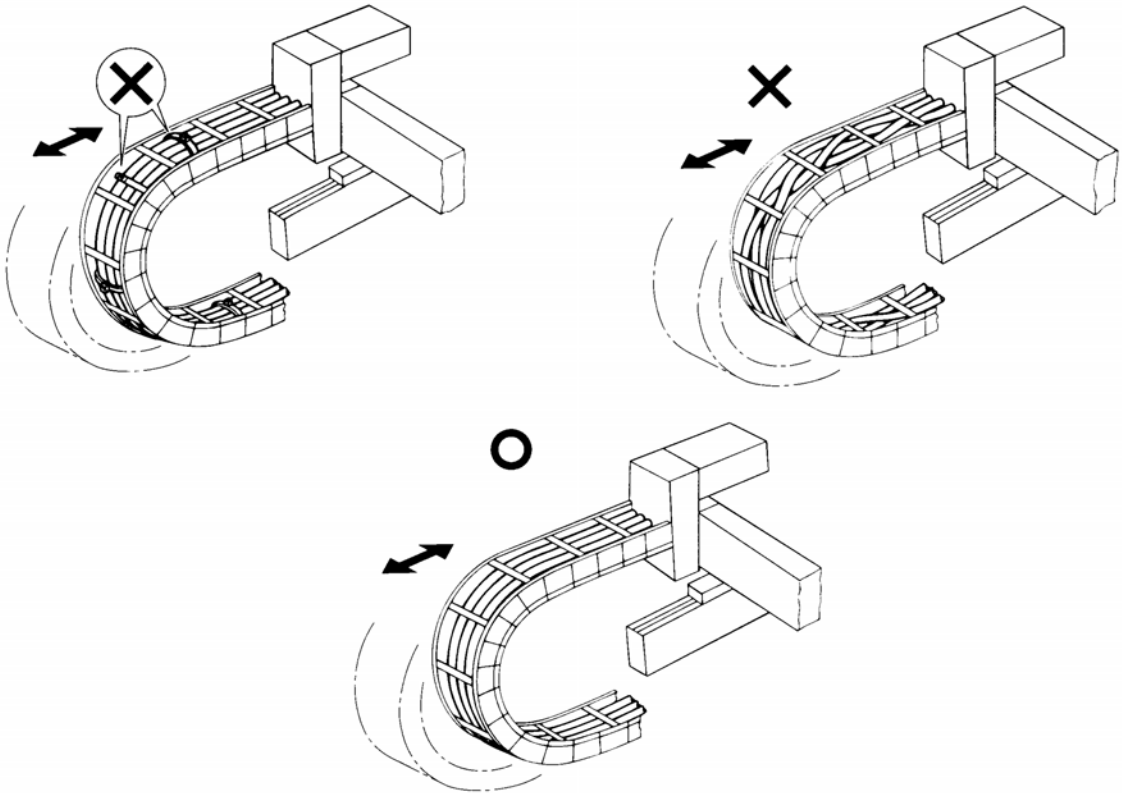

8. Do not cause the cables to occupy more than 60% of the space in the cable bearer.

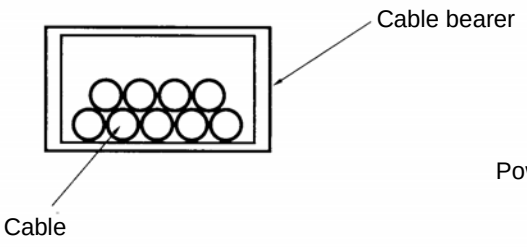

9. Do not lay signal lines together with circuit lines that create a strong electric field.

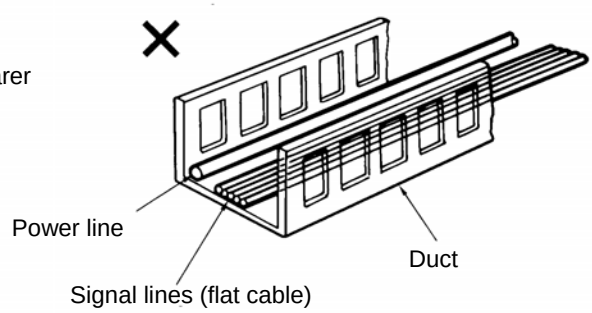

10. Always use a robot cable if the cable is likely to flex significantly.

[Standard structure of cable]
The standard structure of cable will vary depending on the manufacturer and type of cable.

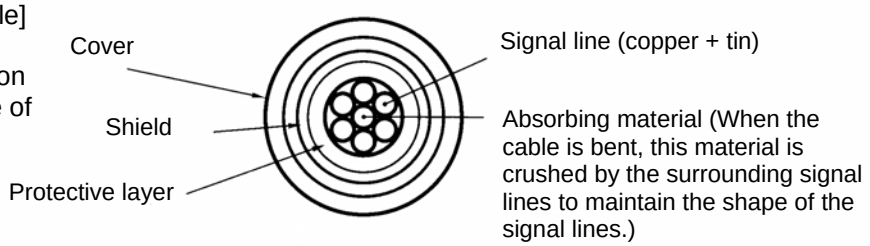

★ Need for Robot Cables

A cable connected to a moving part of an actuator system will inevitably receive repeated bending loads at the base of the cable. As a result, the cores in the cable may break over time. To minimize the risk of cable breakage, we strongly recommend that a robot cable offering significantly higher flexibility be used in this type of application.

Before Use

⚠ Caution

■ Caution

1. Be sure to read this operation manual to ensure the proper use of this product.
2. Unauthorized use or reproduction of a part or all of this operation manual is prohibited.
3. Always handle or operate the product in manners specified in this operation manual, by assuming that whatever is not specified herein is not feasible. The warranty does not cover any defect arising from a handling or operation not specified in this operation manual.
4. The information contained in this operation manual is subject to change without notice for the purpose of modification and improvement.
   * If you have purchased PC software:
     Always back up the parameters after installing the product or changing the parameter settings.
5. The specifications in this manual may not apply to a custom product.

⚠ Caution

■ Action to Be Taken in Case of Emergency

If this product is found to be in a dangerous condition, immediately turn off all power switches of the main unit and connected equipment or immediately disconnect all power cables from the outlets. (“Dangerous condition” refers to a situation where the product is generating abnormal heat or smoke or has ignited and a fire or danger to human health is anticipated.)

Table of Contents

Introduction 1

Part 1 Installation 3

Chapter 1 Safety Precautions 3
Chapter 2 Warranty Period and Scope of Warranty 4
1. Warranty Period 4
2. Scope of Warranty 4
3. Scope of Service 4
Chapter 3 Installation Environment and Selection of Auxiliary Power Devices 5
1. Installation Environment 5
2. Heat Radiation and Installation 6
3. Selection of Auxiliary Power Devices 7
4. Noise Control Measures and Grounding 12
Chapter 4 Name and Function of Each Part 15
1. Front View of Controller 15
2. Explanation of Codes Displayed on the Panel Window 28
2.1 Application 28
2.2 Core 29
2.3 Current Monitor and Variable Monitor 30
Chapter 5 Specifications 32
1. Controller Specifications 32
2. External I/O Specifications 36
2.1. NPN Specification 36
2.2. PNP Specification 38
3. Power-Source Capacity and Heat Output 40
4. External Dimensions 43
Chapter 6 Safety Circuit 51
1. Items to Notes 51
2. Safety Circuit for P Type (Standard Specification) Controller 52
3. Safety Circuit for Q Type (Global Specification) Controller 54
Chapter 7 System Setup 59
1. Connection Method of Controller and Actuator 59
2. I/O Connection Diagram 62
3. Multi-point DIO Board 65
Chapter 8 How to Perform An Absolute Encoder Reset (Absolute Specification) 72
1. Preparation 72
2. Procedure 72
Chapter 9 Maintenance 77
1. Inspection points 77
2. Spare consumable parts 77
3. Replacement Procedure for System-Memory Backup Battery 78
4. Replacement Procedure for Absolute-Data Backup Battery 81

Part 2 Operation 83
Chapter 1 Operation 83
1. Starting a Program by Auto-Start via Parameter Setting 84
2. Starting via External Signal Selection 85
3. Drive-Source Recovery Request and Operation-Pause Reset Request 87

Part 3 Controller Data Structure 88
Chapter 1 How to Save Data 89
1. Factory Settings: When the System-Memory Backup Battery is Used 89
2. When the System-Memory Backup Battery is Not Used 90
3. Points to Note 91
Chapter 2 X-SEL Language Data 92
1. Values and Symbols Used in SEL Language 92
1.1 List of Values and Symbols Used 92
1.2 I/O Ports 93
1.3 Virtual I/O Ports 94
1.4 Flags 96
1.5 Variables 97
1.6 Tags 100
1.7 Subroutines 101
1.8 Symbols 102
1.9 Character-String Literals 102
1.10 Axis Specification 103
2. Position Part 105
3. Command Part 106
3.1 SEL language Structure 106
3.2 Extension Condition 107

Part 4 Commands 108
Chapter 1 List of SEL Language Command Codes 108
Chapter 2 Explanation of Commands 118
1. Commands 118
1.1 Variable Assignment 118
1.2 Arithmetic Operation 120
1.3 Function Operation 123
1.4 Logical Operation 126
1.5 Comparison Operation 129
1.6 Timer 130
1.7 I/O, Flag Operation 133
1.8 Program Control 144
1.9 Task Management 147
1.10 Position Operation 152
1.11 Actuator Control Declaration 167
1.12 Actuator Control Command 183
1.13 Structural IF 206

1.14 Structural DO 209
1.15 Multi-Branching 211
1.16 System Information Acquisition 215
1.17 Zone 218
1.18 Communication 222
1.19 String Operation 228
1.20 Palletizing-Related 237
1.21 Palletizing Calculation Command 251
1.22 Palletizing Movement Command 254
1.23 Building of Pseudo-Ladder Task 260
1.24 Extended Commands 262
Chapter 3 Key Characteristics of Actuator Control Commands and Points to Note 268
1. Continuous Movement Commands [PATH, CIR, ARC, PSPL, CIR2, ARC2, ARCD, ARCC, CIRS, ARCS] 268
2. PATH/PSPL Commands 270
3. CIR/ARC Commands 270
4. CIR2/ARC2/ARCD/ARCC Commands 270
Chapter 4 Palletizing Function 271
1. How to Use 271
2. Palletizing Setting 271
3. Palletizing Calculation 277
4. Palletizing Movement 278
5. Program Examples 280
Chapter 5 Pseudo-Ladder Task 288
1. Basic Frame 288
2. Ladder Statement Field 289
3. Points to Note 289
4. Program Example 290
Chapter 6 Application Program Examples 291
1. Operation by Jog Command 291
2. Operation by Point Movement Command 294
3. Palletizing Operation 297

Part 5 Multi-Tasking 300
Chapter 1 Real-Time Multi-Tasking 300
1. SEL Language 300
2. Multi-Tasking 301
3. Difference from a Sequencer 302
4. Release of Emergency Stop 303
5. Program Switching 304
Chapter 2 Example of Building a System 305
1. Equipment 305
2. Operation 305
3. Overview of the Screw-Tightening System 306
4. Hardware 307
5. Software 309

Appendix 311
Actuator Specification List 311
How to Create a Program 317
1. Position Table 317
2. Programming Format 318
3. Positioning to Five Positions 319
4. How to Use TAG and GOTO 320
5. Moving Back and Forth between Two Points 321
6. Path Operation 322
7. Output Control during Path Movement 323
8. Circle/Arc Operation 324
9. Home Return Completion Output 325
10. Axis Movement by Input Waiting and Completion Output 326
11. Changing the Moving Speed 327
12. Changing the Speed during Operation 328
13. Local/Global Variables and Flags 329
14. How to Use Subroutines 330
15. Pausing the Operation 331
16. Canceling the Operation 1 (CANC) 332
17. Canceling the Operation 2 (STOP) 333
18. Movement by Position Number Specification 334
19. Movement by External Position Data Input 335
20. Outputting Coordinates 336
21. Conditional Jump 337
22. Waiting Multiple Inputs 338
23. How to Use Offset 339
24. Executing an Operation N times 340
25. Constant-pitch Feed 341
26. Jogging 342
27. Switching Programs 343
28. Aborting a Program 344
Battery Backup Function 345
1. System-Memory Backup Battery 345
2. Absolute-Data Backup Battery 347
Expansion I/O Board (Optional) 349
Number of Regenerative Resistors to Be Connected 350
Synchro Function 351
1. Common Items (Applicable to both the absolute specification and incremental specification) 351
2. Incremental Specification 351
3. Absolute Specification (When both the master axis and slave axis are of the absolute specification) 351

Absolute Reset of A Synchro Controller 352
1. Synchro Axes 352
2. Position Adjustment of Synchro-Axis Sliders 353
3. Special Absolute-Reset Procedure 353
4. Standard Absolute-Reset Procedure 356
5. Notes on Use of the Synchro Function 357
Multiple-Slider Near-Miss Detection (Collision Prevention) Function 358
General-Purpose RS232 (2-Channel RS232 Unit) 360
List of Parameters 368
1. I/O Parameters 369
2. Parameters Common to All Axes 382
3. Axis-Specific Parameters 385
4. Driver Card Parameters 390
5. Encoder Parameters 393
6. I/O Devices 394
7. Other Parameters 395
8. Manual Operation Types 401
9. Use Examples of Key Parameters 402
Combination Table of X-SEL Linear/Rotary Control Parameters 408
Error Level Control 409
Error List 411
Troubleshooting of X-SEL Controller 448
Trouble Report Sheet 455

Introduction

Thank you for purchasing the X-SEL Controller.

Inappropriate use or handling will prevent this product from demonstrating its full function and may even cause unexpected failure or result in a shortened service life. Please read this manual carefully, and handle the product with due care and operate it correctly. Keep this manual in a safe place and reference relevant items when needed.

The controller types covered by this manual are listed below.

Type	Specification
X-SEL-P	Standard
X-SEL-Q	Global

Refer to the following table for details on type specification.

Type

Example of type specification

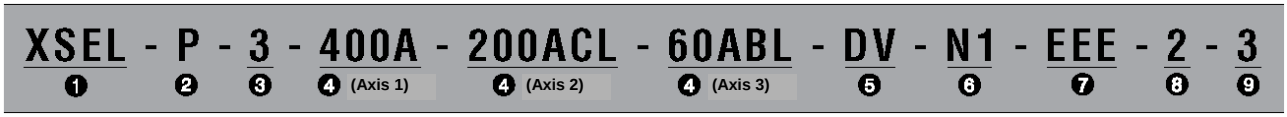

Type specification table

① Series	② Controller type	③ Number of axes	④ Details of axis 1 to axis 4						⑤ Network (dedicated slot)	⑥ Standard I/O (slot 1)	⑦ Expanded-I/O slot			⑧ I/O flat cable length	⑨ Power-source voltage
			Motor output (W)	Encoder type	Brake	Creep sensor	Home sensor (LS)	Synchro specification			Slot 2	Slot 2	Slot 2		
XSEL	P (Standard) Q (Global specification)	1 (1 axis) 2 (2 axes) 3 (3 axes) 4 (4 axes) 5 (5 axes) 6 (6 axes)	20 (20W) 30D (30W for DS) 30R (30W for RS) 60 (60W) 100 (100W) 150 (150W) 200 (200W) 300 (300W) 400 (400W) 600 (600W) 750 (750W)	I (Incremental) A (Absolute)	Blank (No brake) B (With brake)	Blank (No creep sensor) C (With creep sensor)	Blank (No home sensor) L (With home sensor)	Blank (No synchro) M (Master axis specification) S (Slave axis specification)	Blank (Network not available) DV (DeviceNet 256/256 board) CC (CC-Link 256/256 board) PR (ProfiBus 256/256 board) ET (Ethernet Data communica-tion board)	E (Not used) C (CC-Link connection, 16 inputs/16 outputs) N1 (32 inputs/16 outputs, NPN board) N2 (16 inputs/32 outputs, NPN board) N3 (48 inputs/48 outputs, NPN board) P1 (32 inputs/16 outputs, PNP board) P2 (Expanded I/O PNP16/32) P3 (48 inputs/48 outputs, PNP board)	E (Not used) C (CC-Link connection, 16/16 board) N1 (Expanded I/O NPN32/16) N2 (Expanded I/O NPN16/32) N3 (Multi-point I/O NPN48/48) P1 (Expanded I/O PNP32/16) P2 (Expanded I/O PNP16/32) P3 (Multi-point I/O PNP48/48)	E (Not used) C (CC-Link connection, 16/16 board) N1 (Expanded I/O NPN32/16) N2 (Expanded I/O NPN16/32) N3 (Multi-point I/O NPN48/48) P1 (Expanded I/O PNP32/16) P2 (Expanded I/O PNP16/32) P3 (Multi-point I/O PNP48/48)	E (Not used) C (CC-Link connection, 16/16 board) N1 (Expanded I/O NPN32/16) N2 (Expanded I/O NPN16/32) N3 (Multi-point I/O NPN48/48) P1 (Expanded I/O PNP32/16) P2 (Expanded I/O PNP16/32) P3 (Multi-point I/O PNP48/48)	2: 2 m (Standard) 3: 3 m 5: 5 m 0: None (*1)	2: Single-phase, 200 V 3: Three-phase, 200 V

This controller receives two types of power from external power sources: one for driving the motor (three-phase or single-phase, 200 to 220 V) and the other for control (single-phase, 200 to 220 V).

* A single-phase power source is required only for controllers of single-phase specification.

The motor-drive power supply is controlled independently of the control power supply, and the internal operations of the controller are different depending on whether it is of the global specification or standard specification.

With the standard controller, the main CPU in the system performs all self-diagnosis checks and supplies power to the drive part only when the system can operate properly.

With the global controller, the user must provide a separate circuit that cuts off the three-phase 200-VAC motor power supplied to the controller. If this drive-power cutoff circuit is not provided, safe operation of the controller cannot be guaranteed.

If your controller is of the global specification, be sure to provide a safety circuit (drive-power cutoff circuit).

This controller can be configured with one to six axes. Just like other conventional SEL controllers, this controller can be combined with various actuators. When connecting an actuator, be sure to use a dedicated cable.

- Turn on the controller power before or simultaneously with the motor power.
- Turn off the controller power after or simultaneously with the motor power.
- Before performing a check or inserting/removing a connector, turn off the power and wait for at least 10 minutes. Even after the power is turned off, the internal circuits will continue to carry high voltages for a short period.
- About actuator duty
  IAI recommends that our actuators be used at a duty of 50% or less as a guideline in view of the relationship of service life and accuracy:

$$\text{Duty (\%)} = \frac{\text{Acceleration / Deceleration Time}}{\text{Motion time} + \text{Inactivity}} \text{ X } 100$$

- After turning off the control power, be sure to wait for at least 5 seconds (40 seconds for single-phase P type controllers) before turning it back on.
  An “E6D, Drive-source cutoff relay error” may generate if the control power is turned off and then turned on again too quickly.
- Do not insert or remove connectors while the controller power is on. Doing so may cause malfunction.
- Items to note when introducing an absolute-specification controller
  Follow the steps below to initialize the absolute-data backup battery circuit and thereby prevent early consumption of the battery:
  (1) Set the absolute-data backup battery enable/disable switch to the bottom position.

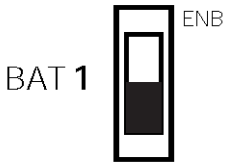

  (2) Connect the encoder cable.
  (3) Turn on the power.
  (4) Set the absolute-data backup battery enable/disable switch to the top (ENB) position.
  The above steps must be performed after the encoder cable has been removed due to relocation, etc.

Read the operation manual for each actuator. If you have purchased our optional PC software and/or teaching pendant, read the respective operation manuals, as well.

* Utmost effort has been made to ensure that the information contained in this manual is true and correct. However, should you find any error or if you have any comment regarding the content, please contact IAI.

Part 1 Installation

⚠ Caution

Chapter 1 Safety Precautions

The X-SEL Controller can be combined with a maximum of six actuators of different types, and is able to provide integrated control over the entire system including peripherals. In other words, the X-SEL Controller has the ability to control systems of all sizes ranging from a small system to a large factory automation system. In general, however, the occurrence rate of accidents due to wrong operation or carelessness will rise as the system becomes larger and more complex. Please give due consideration to safety measures.

This system product was developed as a drive unit for an automated machine, etc., and as such the maximum torque and speed are limited to levels acceptable for an automatically driven machine. However, strict observance of the following items is requested to prevent unforeseen danger. Also read the appendix entitled, “Safety Rules and Others.”

1. Do not handle this product in manners not specified in this manual. If you have any question regarding the content of this manual, please contact IAI.

2. Always use the specified, genuine IAI cables for wiring between the controller and the actuator.

3. Do not enter the operation area of the machine while the machine is operating or ready to operate (the controller power is on). If the machine is used in a place accessible to other people, provide an appropriate safety measure such as enclosing the machine with a cage.

4. When assembling/adjusting or maintaining/inspecting the machine, always turn off the controller power at the source beforehand. The operator should display in a conspicuous place a plate or other sign saying that operation is in progress and that the power should not be turned on. The operator should keep the entire power cable beside him or her to prevent another person from inadvertently plugging in the cable.

5. When two or more operators are to work together, set call-out signals to ensure safety of all personnel during the work. In particular, a person turning on/off the power or moving an axis—either via a motor or manually—must always say what he or she is going to do out loud and confirm the responses from the others first before actually performing the operation.

Chapter 2 Warranty Period and Scope of Warranty

The X-SEL Controller you have purchased passed our strict outgoing inspection. This unit is covered by the following warranty:

1. Warranty Period

The warranty period shall be either of the following periods, whichever ends first:

- 18 months after shipment from our factory
- 12 months after delivery to a specified location

2. Scope of Warranty

Should the product fail during the above period under a proper use condition due to a fault on the part of the manufacturer, IAI will repair the defect free of charge. However, the following cases are excluded from the scope of warranty:

- Discoloration of paint or other normal aging
- Wear of consumable parts due to use
- Subjective imperfection, such as noise not affecting mechanical function
- Defect caused by inappropriate handling or use by the user
- Defect caused by inappropriate or erroneous maintenance/inspection
- Defect caused by use of a part other than IAI's genuine part
- Defect caused by unauthorized modification, etc., not approved by IAI or its agent
- Defect due to an act of God, accident, fire, etc.

The warranty covers only the product as it is delivered. IAI shall not be liable for any loss arising in connection with the delivered product. The user must bring the defective product to our factory to receive a warranty repair.

3. Scope of Service

The price of the delivered product does not include costs incurred in association with program generation, dispatch of technician, etc. Therefore, a separate fee will be chargeable in the following cases even during the warranty period:

- Guidance on installation/adjustment and witnessing of test operation
- Maintenance/inspection
- Technical guidance and training on operation, wiring method, etc.
- Technical guidance and training regarding programs, such as program generation
- Other services and operations where IAI finds a need to charge a separate fee

Chapter 3 Installation Environment and Selection of Auxiliary Power Devices

1. Installation Environment

(1) When installing and wiring the controller, do not block the ventilation holes provided for cooling. (Insufficient ventilation will not only prevent the product from functioning fully, but it may also result in failure.)
(2) Prevent foreign matter from entering the controller through the ventilation holes. Since the controller is not designed as dustproof or waterproof (oilproof), avoid using it in a dusty place or place subject to oil mist or splashed cutting fluid.
(3) Do not expose the controller to direct sunlight or radiant heat from a high heat source such as a heat-treating furnace.
(4) Use the controller in a non-condensing environment free from corrosive or inflammable gases.
(5) Use the controller in an environment where it will not receive external vibration or impact.
(6) Prevent electrical noise from entering the controller or its cables.

Environmental Condition of Controller

Item	Specification and description
Operating temperature range	0 ~ 40°C
Operating humidity range	10% ~ 95% (Non-condensing; conforming to JIS C3502 RH-2)
Storage temperature range	-25°C ~ 70°C (Excluding the battery)
Maximum operating altitude	2000 m
Protection class	IP20
Vibration	$10 \leq f < 57$: 0.035 mm (continuous), 0.075 mm (intermittent) $57 \leq f \leq 150$: 4.9 m/s^2 (continuous), 9.8 m/s^2 (intermittent) X, Y and Z directions
Impact	147 mm/s^2, 11 ms, half-sine pulse, 3 times each in X, Y and Z directions

Electrical Specifications of Controller

Item	Specification
Power-source voltage	Three-phase, 200 ~ 230 VAC ± 10%
Power-source frequency	50/60 Hz ± 5% (Conforming to JIS C3502 RH-2)
Momentary power failure resistance	0.5 cycle (Phase-independent)
Electric shock protection	Class I: Basic insulation, grounding by ground terminal
Overvoltage class	Class II: Withstand voltage of 2500 V at voltage inputs below 300 VAC (rated input)
Pollution degree	Pollution degree 2
Rush current	120 A max. for motor power, 50 A max. for control power (at 40°C, 200-VAC input) The level of rush current will vary depending on the power-source environment. The above values are provided for reference purpose only.
Leak current	2 mA max. (Controller only without any axes connected)

2. Heat Radiation and Installation

Design the control panel size, controller layout and cooling method so that the ambient temperature around the controller will be kept at or below 40°C.

Install the controller vertically on a wall, as illustrated below. The controller will be cooled by forced ventilation (exhaust air will be discharged from the top). Be sure to install the controller in the aforementioned direction and provide a minimum clearance of 150 mm above and 150 mm below the controller.

If multiple controllers are to be installed side by side, providing additional suction fans on top of the controllers will help maintain a uniform ambient temperature.

Provide a minimum clearance of 150 mm between the front side of the controller and a wall (enclosure).

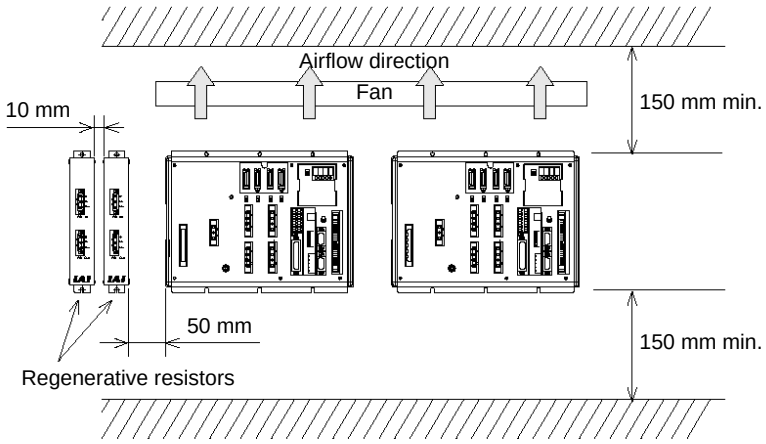

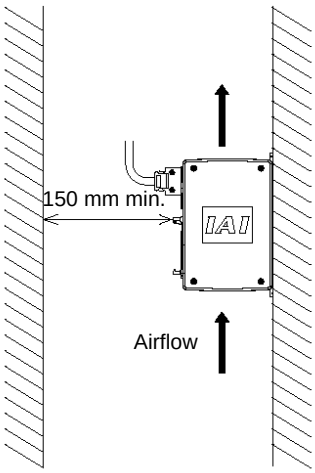

If multiple controllers are to be connected on top of one another, prevent the controller above from taking in the exhaust air from the controller below.
Provide a clearance of approx. 50 mm between the regenerative resistor and the controller, and a clearance of approx., 10 mm between the regenerative resistors.

3. Selection of Auxiliary Power Devices

This section provides selection guidelines for breakers, earth leakage breakers, contactors, surge absorbers and noise filters that can be used with the AC power-supply line of the X-SEL controller. These devices must be selected by taking into consideration the power consumption, rush current and maximum motor drive current of the controller.

(1) Power consumption

The table below lists the current capacities of the control power supply and motor power supply. The power values of the control power supply are indicated by maximum loads. The power values of the motor power supply can vary in accordance with the connected axes and load condition. The table lists the power values of the motor power supply based on a load factor of 100%. Although a duty factor of 50% is recommended in this manual, these values assume the maximum allowable performance of the controller. A maximum motor current of three times the rated current may flow during high-acceleration operations. The table below indicates the momentary maximum currents calculated as three times the corresponding rated currents.

Guideline for AC Power-supply Operating Current

	Control power supply	Motor power supply					
		~ 400 W	~ 800 W	~ 1200 W	~ 1600 W	~ 2000 W	~2400 W
Rated power	181 VA	800 VA	1595 VA	2390 VA	3185 VA	3980 VA	4775 VA
Rated current	0.71 A	2.6 A	5.2 A	7.7 A	10.3 A	12.8 A	15.4 A
Momentary maximum power		2400 VA	4785 VA	7170 VA	9555 VA	11940 VA	14325 VA
Momentary maximum current		7.7 A	15.4 A	23 A	30.7 A	38.3 A	46.0 A

(2) Leak current

When installing the controller, always provide an inverter-type earth leakage breaker.
The table below lists the controller leak currents excluding the currents leaked from the servo system.

Model	Leak current (control power supply)	Leak current (motor power supply)
P type (Standard specification)	0.4 mA (200-VAC input)	2 mA max. (200-VAC input)
Q type (Global specification)	0.2 mA (200-VAC input)	2 mA max. (200-VAC input)

(3) Rush current

The table below lists reference rush currents that may generate in the control power supply and motor power supply. As for the motor power supply system, the capacitor volume will vary depending on the number of driver boards installed. However, the maximum current that can flow through the motor power supply remains the same.

	Control power supply	Motor power supply	
		Less than 1200 W	1200 W or above
Rush current	50 A	60 A max.*	120 A max.*
Rush current duration	3 ms		

* At 40°C, 200-VAC input

(4) Auxiliary power devices

[1] Breaker or electromagnetic contactor

Install a circuit breaker or earth leakage breaker in the AC power-supply line (primary side) of the controller in order to prevent damage due to power switching and short current. One circuit breaker or earth leakage breaker can be used to protect both the motor power supply and control power supply.

If your controller is of the global specification, an electromagnetic contactor must be installed in front of the motor power input port on the controller so that the motor drive source can be cut off. Select a product that meets your requirement for safety category. Refer to Chapter 6, “Safety Circuit,” for the configuration of the safety circuit.

[2] Noise filter, ring core and clamp filters

The global specification has no built-in noise filters in the motor power supply. If your controller is of the global specification, therefore, be sure to install noise filters and ring cores for the motor drive power supply externally to the controller. Even with the standard controller, noise filters and ring cores must be installed if noise-sensitive external equipment will be used.

With both the global specification and standard specification, use the same noise filters and ring cores to protect both the motor power supply and control power supply.

Install clamp filters to ensure compliance with the EC Directives or if necessary for other reasons.

- Clamp filter A
  Install this clamp filter to the control power cable and motor cable (if there are multiple axes, connect to the cables of all axes).
- Clamp filter B
  Install this clamp filter to the motor power cable.

Caution:	Be sure to use the following noise filter, ring core and clamp filters to ensure compliance with the EC Directives (IAI uses the following filters in the evaluation certification tests under the EMC Directives).

Recommended Noise Filter, Ring Core and Clamp Filters

	Supplier	Model
Noise filter	Densei-Lambda	MC1320 (for three-phase power supply) MXB-1220-33 (for single-phase power supply)
Ring core	NEC Tokin	ESD-R-25
Clamp filter A	TDK	ZCAT3035-1330
Clamp filter B	Kitagawa Industries	RFC-H13

[3] Surge absorber

With both the global specification and standard specification, the motor drive part of the X-SEL controller has no built-in surge absorber to protect the equipment against surge noises that may generate in the controller due to lightning, etc.

Therefore, a surge absorber must be installed externally to the controller if you want to increase the surge resistance of your equipment.

Caution:	Be sure to use the following surge absorber to ensure compliance with the EC Directives. Recommended surge absorber: R/A/V-781BXZ-4 by Okaya Electric Industries

Peripheral configurations for the global and standard specifications are shown on the following pages.

Peripheral Configurations

Three-phase power supply specification

P Type
(Standard Specification)

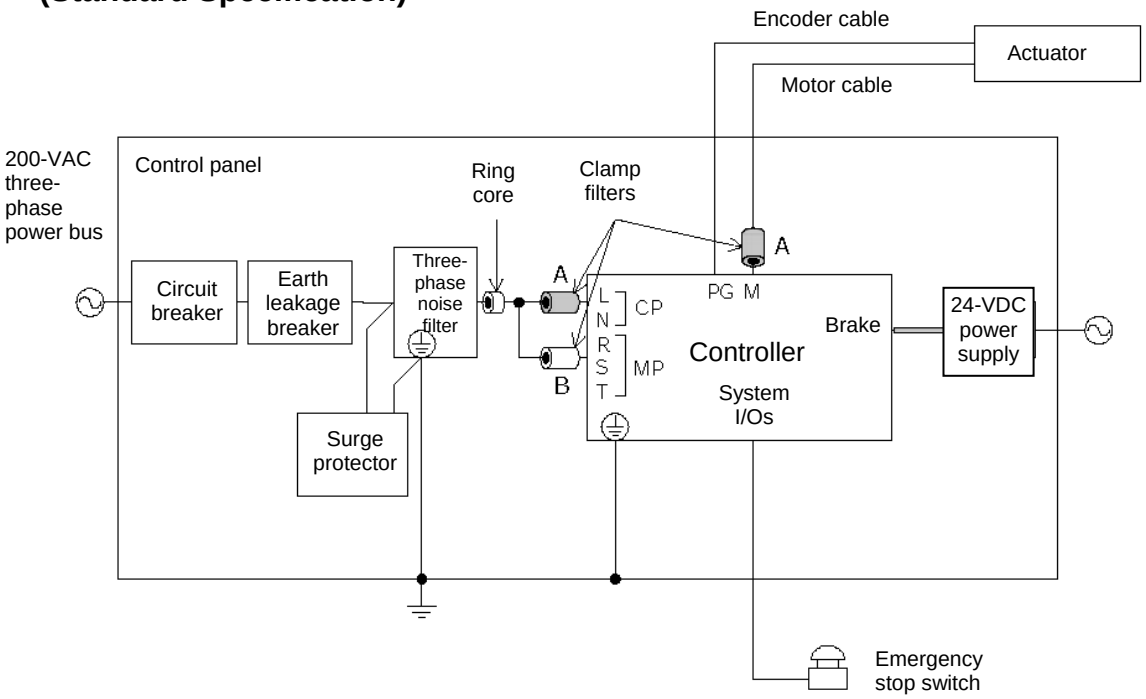

Q Type
(Global Specification)

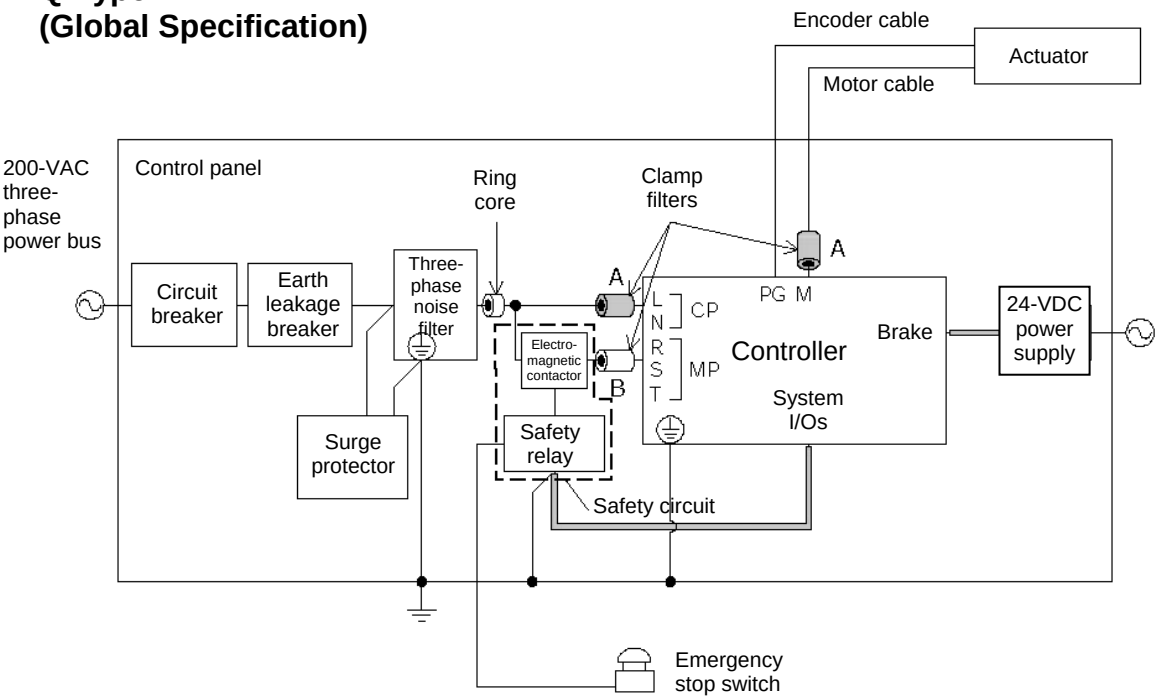

Peripheral Configurations

Single-phase power supply specification

P Type
(Standard Specification)

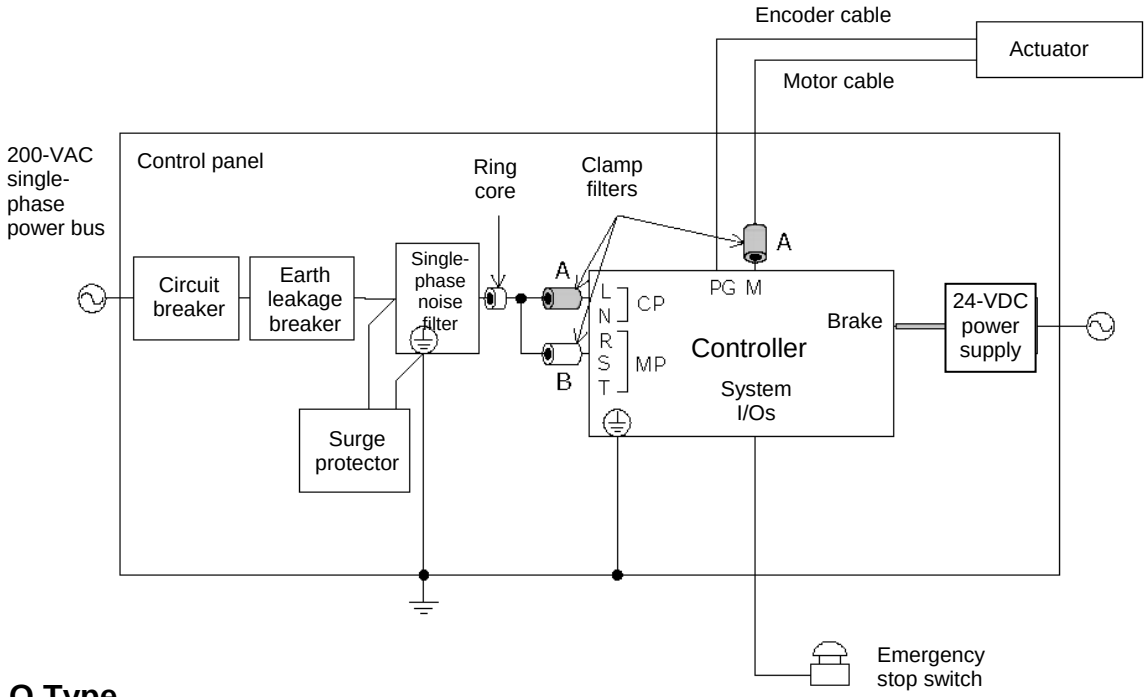

Q Type
(Global Specification)

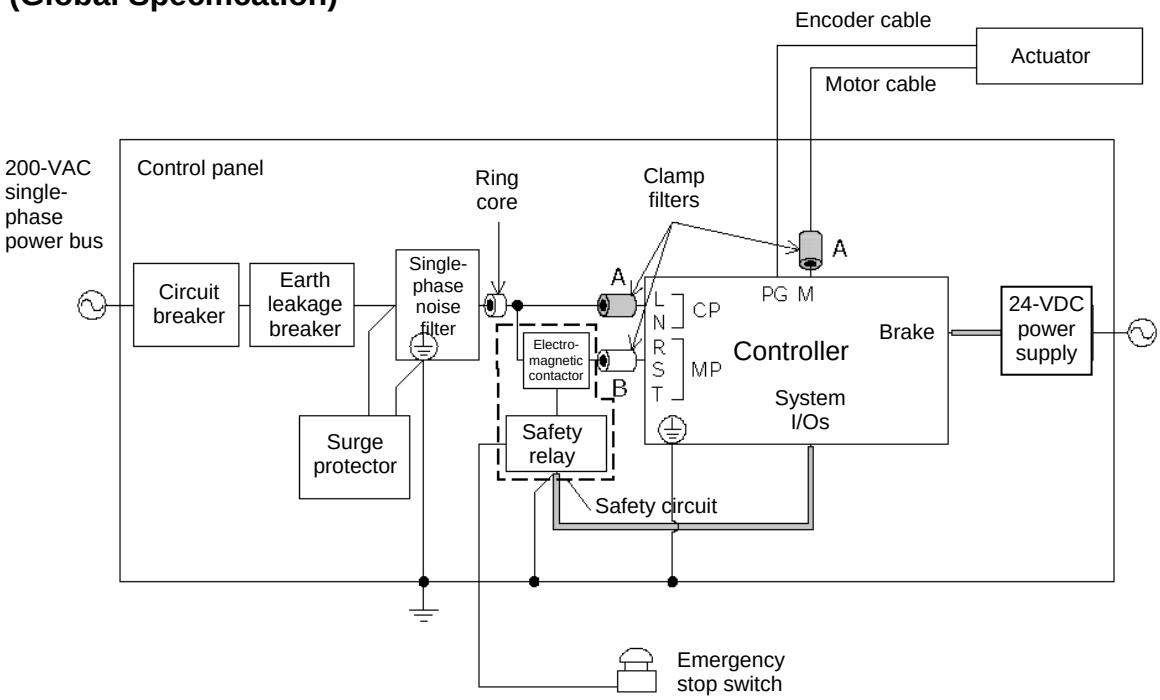

4. Noise Control Measures and Grounding

(1) Wiring and power source
PE on the power terminal block is used for protective grounding. Provide Class D grounding from this terminal.
Use a grounding cable with a wire size of 1.0 mm^2 (#AWG17) or more, which should not be smaller than the AC power cable.

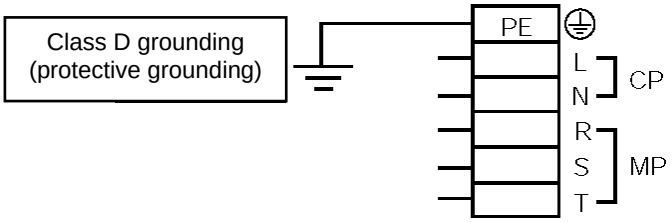

a. Notes on wiring method
Use twisted cables for the AC power cable and 24-VDC external power cable. Wire the controller cables separately from lines creating a strong electric field such as power circuit lines (by not bundling them together or placing in the same cable duct).

If you wish to extend the motor cable or encoder cable beyond the length of each supplied cable, please contact IAI's Technical Service Section or Sales Engineering Section.

(2) Noise-elimination grounding

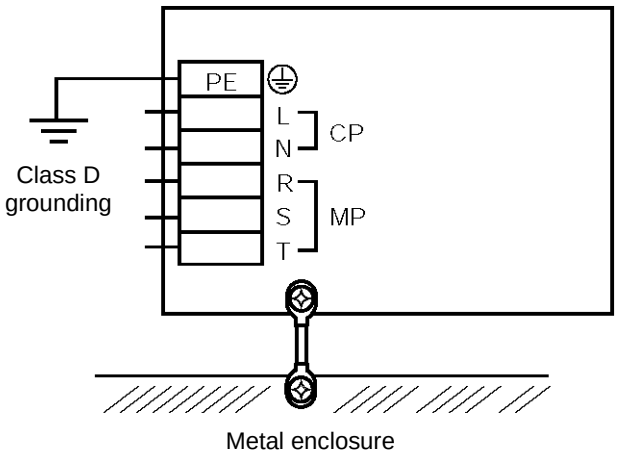

Provide dedicated grounding for the FG and PE.

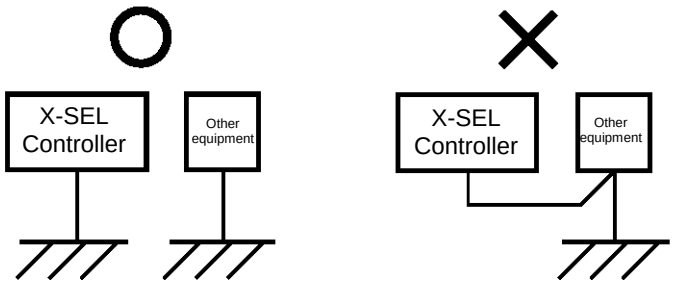

Do not connect as above.

(3) Noise sources and noise elimination
There are many noise sources, but solenoid valves, magnet switches and relays are of particular concern when building a system. Noise from these parts can be eliminated using the measures specified below:

a. AC solenoid valve, magnet switch, relay

Measure --- Install a surge killer in parallel with the coil.

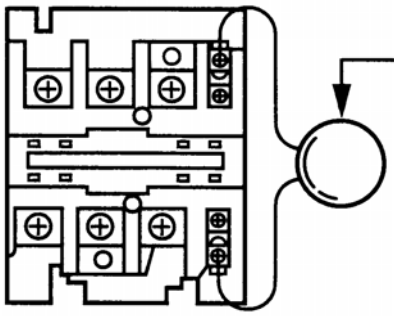

b. DC solenoid valve, magnet switch, relay

Measure --- Install a diode in parallel with the coil. Determine the diode capacity in accordance with the load capacity.

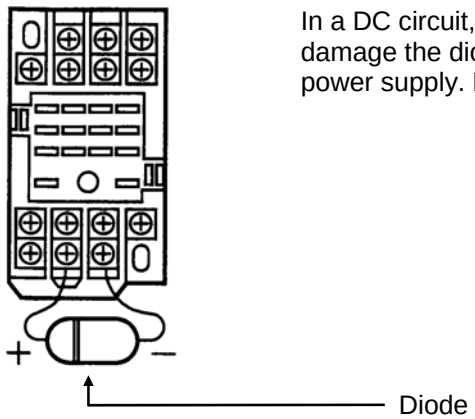

In a DC circuit, connecting a diode in reversed polarity will damage the diode, internal parts of the controller and DC power supply. Exercise due caution.

The above noise elimination measures are particularly important when a 24-VDC relay is driven directly by a controller output and there is also a 100-VAC solenoid valve, etc.

Reference Circuit Diagram

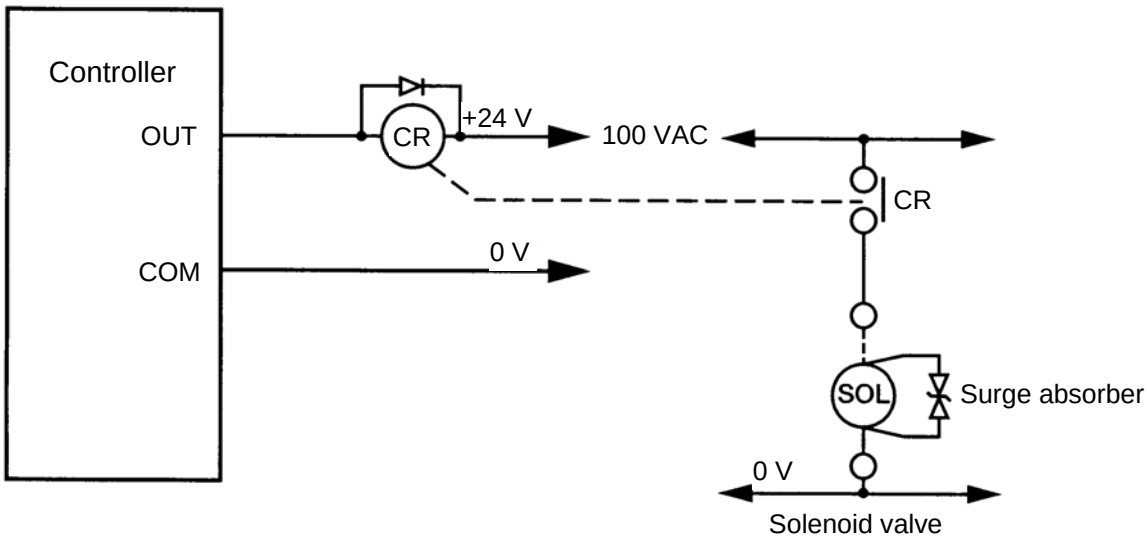

Chapter 4 Name and Function of Each Part

1. Front View of Controller

P Type (Standard Specification), 4 axes

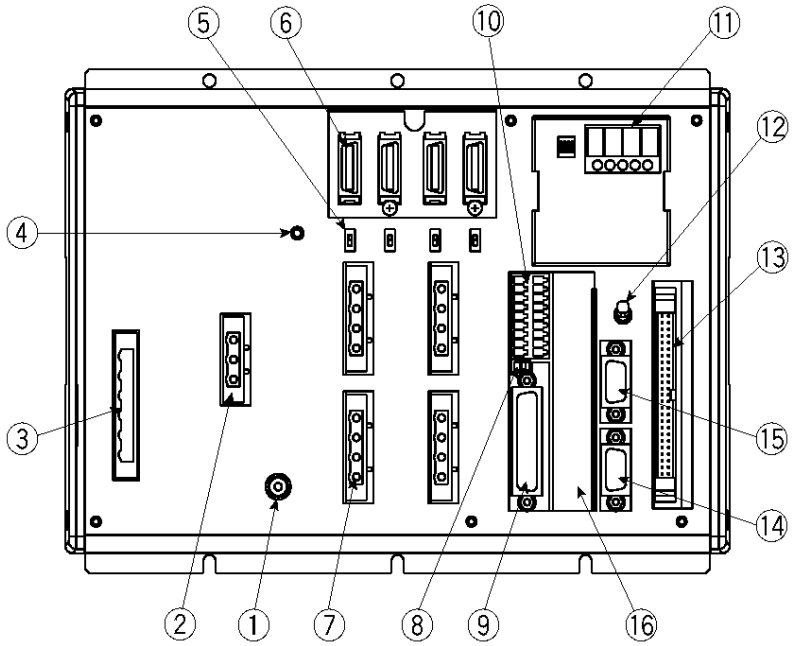

P Type (Standard Specification), 4 axes with expansion I/O board and brake unit

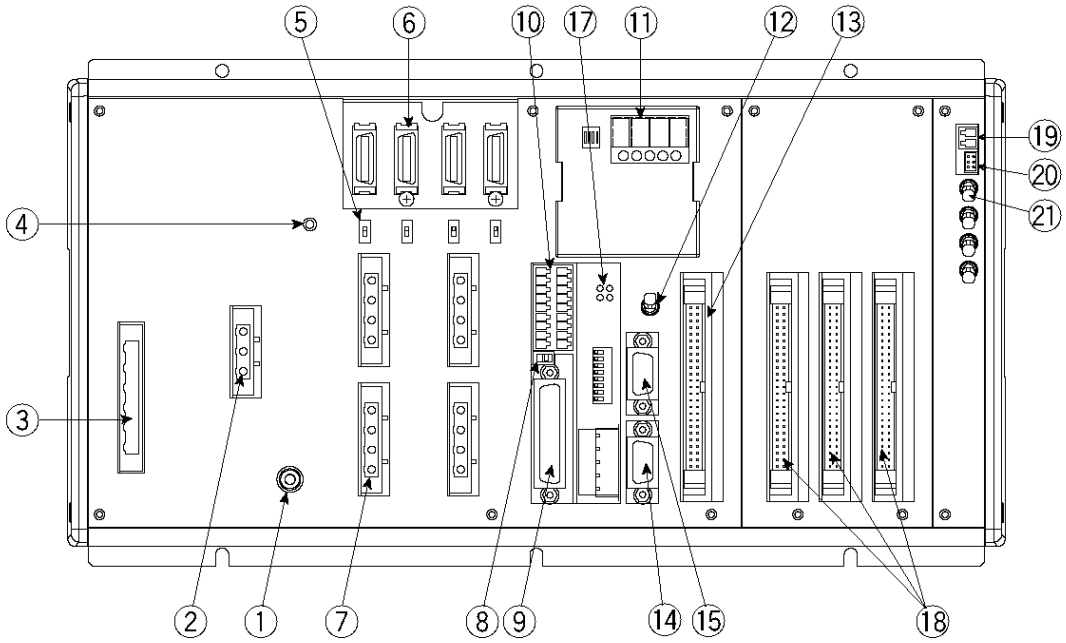

Q Type (Global Specification), 4 axes

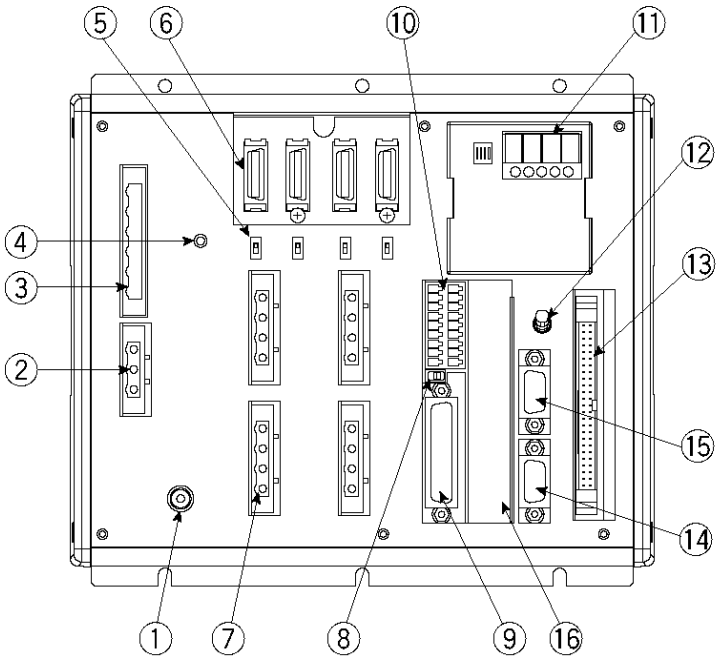

Q Type (Global Specification), 4 axes with expansion I/O board and brake unit

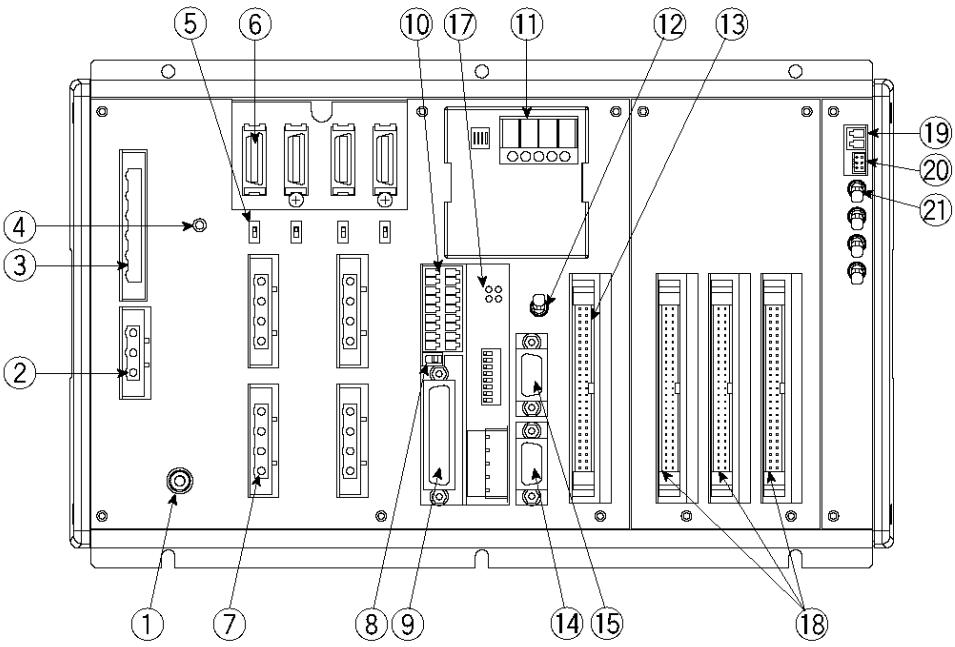

(1) FG terminal

This terminal is used to ground FG on the enclosure. The enclosure is connected to PE in the AC input part inside the controller.

FG Terminal Specifications

Item	Description
	M4 3-point SEMS screw, 5 mm
Name	FG
Cable size	2.0 ~ 5.5 mm^2 min.
Grounding method	Class D grounding

(2) External regenerative unit connector

This connector is used to connect a regenerative resistance unit that may be required when the controller is used in a high-speed/high-load environment, etc., and the built-in regenerative resistance capacity is not sufficient. Whether or not an external regenerative resistance is necessary will be determined by the specific application such as axis configuration. Refer to “Number of Regenerative Resistors to Be Connected” in Appendix.

External Regenerative Unit Connector Specifications

Item	Overview	Details
Connector	3-pin 2-piece connector by Phoenix Contact	GIC2.5/3-STF-7.62
Connector name	RB	
Cable size	Applicable wire size: AWG12 ~ 24	The cable is supplied with the external regenerative unit.
Size of supplied cable	1.0 mm^2 (equivalent to AWG17)	
Connected unit	External regenerative box	
Terminal assignments	RB+	Regenerative resistance + (Motor-driving DC voltage)
	RB–	Regenerative resistance –
	⏚	Grounding terminal

(3) AC-power input connector

A 200-VAC, single-phase or three-phase input connector consisting of six terminals including motor power terminals, control power terminals and a PE terminal.

Note) Take note that the single-phase input specification and three-phase input specification are available depending on the required motor-drive power source. The standard type only comes with a terminal block.

Caution To prevent electric shock, do not touch this connector when the controller is receiving power.

AC Power Connector Specifications

Item		Overview			Details	
Connector		6-pin 2-piece connector by Phoenix Contact			GMSTB 2.5/6-7.62	
Connector name		PWR				
	Connected unit	Single-phase power source 200/230 VAC, 50/60 Hz				
Single-phase specification	Terminal assignments	6		PE	Protective grounding wire	
		5	IN	CP_L	200 VAC for control power, phase L	Cable size 0.75 mm^2 (AWG 18)
		4	IN	CP_N	200 VAC for control power, phase N	
		3		NC	Do not connect this terminal.	
		2	IN	MP_L	200 VAC for motor power, phase L	Cable size 2 mm^2 (AWG 14)
		1	IN	MP-N	200 VAC for motor power, phase N	
Three-phase specification	Terminal assignments	6		PE	Protective grounding wire	
		5	IN	CP_L	200 VAC for control power, phase L	Cable size 0.75 mm^2 (AWG 18)
		4	IN	CP_N	200 VAC for control power, phase N	
		3	IN	MP_R	200 VAC for motor power, phase R	Cable size 2 mm^2 (AWG 14)
		2	IN	MP_S	200 VAC for motor power, phase S	
		1	IN	MP_T	200 VAC for motor power, phase T	

(4) Control-power monitor LED

A green light illuminates when the control power supply is generating the controller's internal power correctly.

(5) Absolute-data backup battery enable/disable switch

This switch is used to enable or disable encoder data backup using the absolute-data backup battery. The backup is disabled before shipment. Set the switch to the top position after connecting the encoder/axis-sensor cables and turning on the power.

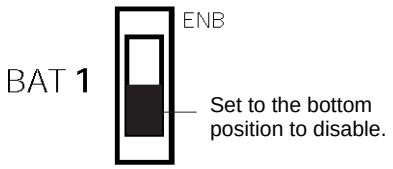

(6) Encoder/axis-sensor connector

This connector is used to connect the actuator encoder and axis sensors such as LS, CREEP and OT. * LS, CREEP and OT sensors are optional.

Encoder/Axis-sensor Connector Specifications

Item	Description	Details
Connector	Half-pitch, 26-pin I/O connector	10226-6202JL (by Sumitomo 3M)
	Cable-end connector	10126-3000VE (by Sumitomo 3M) (Hood: 10326-52F0-008)
Connector name	PG1 ~ 6	Encoder/axis-sensor connector
Maximum wiring distance	30 m	

	Pin No.	Signal name	Description
Signal table	**1**	A+	Phase-A differential + input (phase U+)
	2	A–	Phase-A differential - input (phase U-)
	3	B+	Phase-B differential + input (phase V+)
	4	B–	Phase-B differential - input (phase V-)
	5	Z+	Phase-Z differential + input (phase W+)
	6	Z–	Phase-Z differential - input (phase W-)
	7	SRD+	Send/receive differential + (pulse/magnetic pole switching +)
	8	SRD–	Send/receive differential - (pulse/magnetic pole switching -)
	9	NC	Not connected
	10	NC	Not connected
	11	NC	Not connected
	12	24VOUT	Sensor power output
	13	0V	24-V power ground
	14	BATT	Backup battery
	15	BATTGND	Battery ground
	16	VCC	Encoder power
	17	GND	GND
	18	NC	Not connected
	19	NC	Not connected
	20	BK–	Brake open output signal - (COM: Common to all axes)
	21	BK+	Brake open output signal +
	22	NC	Not connected
	23	*RSV	Sensor input RSV
	24	*OT	Sensor input OT
	25	*CLEEP	Sensor input CLEEP
	26	*LS	Sensor input LS

(7) Motor connector ..... This connector is used to drive the motor inside the actuator.

Motor Connector Specifications

Item	Description			Details
Connector	GIC2.5/4-STF-7.62			4-pin, 2-piece connector by Phoenix Contact
Connector name	M1 ~ 6			Motor connector
Cable size	0.75 mm^2 (equivalent to AWG18)			Supplied with the actuator.
Connected unit	Actuator			
Terminal assignments	**1**		PE	Protective grounding wire
	2	Out	U	Motor drive phase U
	3	Out	V	Motor drive phase V
	4	Out	W	Motor drive phase W

(8) Teaching-pendant type switch (P type only) ..... This switch is used to change the type of the teaching pendant connected to the teaching connector (9). It switches between “IAI’s standard teaching pedant” and “ANSI teaching pendant.” The switch is located on the front side of the board. Select the applicable setting in accordance with the teaching pendant used.
Left: ANSI teaching pendant Right: IAI’s standard teaching pendant

Switch

Note 1: The safety gate switch will not function if this switch is not set correctly.

Note 2: Q type controllers connot be used with IAI’s standard teaching pendants.

Note 3: The TP switch is not provided on Q type controllers.

(9) Teaching connector ..... The teaching interface connects IAI's teaching pendant or a PC (PC software) to enable operation and setting of your equipment from the teaching pendant/PC. The physical interface consists of a RS232C system based on a 25-pin, D-sub connector. The signal level conforms to RS232C, and a desired baud rate (up to 115.2 kbps) can be selected depending on the program. RS232C communication is possible only when the mode switch (12) is set to the MANU position.
You can also use an ANSI teaching pendant equipped with an ANSI-compliant double-action enable switch. Whether the controller supports an ANSI teaching pendant or IAI's standard teaching pendant can be set using the selector switch (8) provided above the teaching connector. (P type only)

Interface Specifications of Teaching Serial Interface

Item	Description	Details
Connector	DSUB-25	XM3B-2542-502L (by Omron)
Connector name	T.P.	Teaching connector
Communication method	RS232C-compliant, start-stop synchronous half-duplex communication	Signal assignments conform to the RS232C DTE terminal layout. Assign dedicated control lines to undefined lines, etc.
Baud rate	Up to 115.2 kbps	Half-duplex communication speeds of up to 115.2 kbps are supported.
Maximum wiring distance	10M	At 38.4 kbps
Interface standard	RS232C	
Connected unit	Dedicated teaching pendant	IAI's standard teaching pendant for X-SEL, or ANSI teaching pendant
Connection cable		Dedicated cable
Power supply	5 VDC or 24 VDC	A multi-fuse (MF-R090) is installed to protect each line against short current (the fuse will trip with currents of between 1.1 A and 2.2 A).
Protocol	X-SEL teaching protocol	The connector supports the X-SEL-J/K teaching pendant interface protocol.
Emergency-stop control	Series emergency-stop relay drive (24 V)	An emergency-stop relay drive line is provided in the interface connector. This line is connected in series with other emergency-stop contact. Two independent emergency-stop input circuits are provided as a redundant safety design.
Enabling control	Enable switch line (24 V)	A line for connecting an enable switch is provided as an operator interlock. Two independent enable input circuits are provided as a redundant safety design.
(12) Mode switch	AUTO/MANU switch	Whether or not the teaching pendant can be used is set by the AUTO/MANU mode switch. The controller establishes a handshake with the teaching pendant only when this switch is set to the MANU mode. Note, however, that the teaching pendant displays the monitor screen regardless of the AUTO/MANU setting.

Interface Specifications of Teaching Serial Interface

Item	No.	Direction	Signal name	Details
Terminal assignments	1		FG	Frame ground
	2	Out	TXD	Transmitted data
	3	In	RXD	Received data
	4	Out	RTS	Request to send
	5	In	CTS	Clear to send
	6	Out	DSR	Equipment ready
	7		SG	Signal ground
	8		NC	Not connected
	9	In	RSVTBX1	RSV signal line for generic teaching pendant
	10	In	RSVTBX2	RSV signal line for generic teaching pendant
	11		NC	Not connected
	12	Out	EMGOUT1	Emergency-stop contact 1
	13	In	EMGIN1	
	14		NC	Not connected
	15	Out	RSVVCC	24-V power supply for IA-T-XA/SEL-T (D) teaching pendant
	16	Out	EMGOUT2	Emergency-stop contact 2
	17	Out	ENBVCC1	Enable drive power 1
	18	Out	VCC	Power output (power supply for IA-T-X (D) teaching pendant)
	19	In	ENBTBX1	Enable input 1
	20	In	DTR	Terminal ready
	21	Out	ENBVCC2	Enable drive power 2
	22	In	ENBTBX2	Enable input 2
	23	Out	EMGS	Emergency-stop status
	24	In	EMGIN2	Emergency-stop contact 2
	25		SG	Signal ground

Shading indicates that the signal is used only with an ANSI teaching pendant.

(10) System I/O connector ..... This I/O connector is used to control the safety actions of the controller. With the global specification, a safety circuit conforming to a desired safety category of up to level 4 can be configured using this connector and an external safety circuit.

System I/O Connector Specifications

Item	Overview	Details
Connector	2-piece COMBICON connector (18 pins)	MCD1.5/9-G1-3.5P26THR (by Phoenix Contact)
	Cable-end connector	FMC1.5/9-ST-3.5
	Applicable wire size	AWG24 ~ 16
Connector name	SYSTEM IO	
Connected unit	External safety circuit	Emergency stop, safety gate, ready out, external relay cutoff

Overview of Terminal Assignments

	Pin No.	Signal name	Description	
Left	**9**	DET	IN	External contact error input
	8	EMGin	IN	Emergency-stop detection input
	7		+24V	24-V power output for emergency-stop detection input
	6	EMG1	line+	Emergency-stop switch 1
	5		line-	8 mA (P type)
	4	EMG2	line+	Emergency-stop switch 2
	3		line-	8 mA (P type)
	2	SDN	Out+	External relay drive cutoff contact output
	1		Out-	
Right	18	DET	+24V	24-V power output for external contact error input
	17	ENBin	IN	Enable detection input
	16		+24V	24-V power output for enable detection input
	15	ENB1	line+	Enable switch (safety gate, etc.)
	14		line-	8 mA (P type)
	13	ENB2	line+	Safety gate switch 2
	12		line-	8 mA (P type)
	11	RDY	Out+	Ready signal contact output
	10		Out-	

Only a terminal block is supplied without cable (EMG and ENB are shorted by a cable). Do not supply power other than from a 24-VDC power supply to the RDY and SDN contacts.

(11) Panel window

This window consists of a 4-digit, 7-segment LED display and five LED lamps that indicate the status of the equipment.
For the information shown on the display, refer to 2, “Explanation of Codes Displayed on the Panel Window” or the “Error Code Table.”

Meanings of Five LEDs

Name	Status when the LED is lit
RDY	CPU ready (program can be run)
ALM	CPU alarm (system-down level error), CPU hardware error
EMG	Emergency stop has been actuated, CPU hardware error, power-system hardware error
PSE	Power-system hardware error
CLK	System clock error

(12) Mode switch

This alternate switch with lock is used to command a controller operation mode. To operate the switch, pull it toward you and tilt.
Tilting the switch upward will select MANU (manual mode), while tilting it downward will select AUTO (auto mode). Teaching can be performed only in the MANU mode, but auto program start is not enabled in the MANU mode.

* With Q type controllers, connect the supplied dummy plug to the teaching connector (9) while this switch is set to the AUTO mode.

(13) Standard I/O connector

This connector consists of a 50-pin flat connector and comprises 32-input/16-output DIOs.

Overview of Standard I/O Interface Specifications

Item	Description
Connector name	I/O
Connector	Flat connector, 50-pin
Power supply	Supplied from connector pin Nos. 1 and 50
Input	32 points (including general-purpose and dedicated inputs)
Output	16 points (including general-purpose and dedicated outputs)
Connected to	External PLC, sensor, etc.

The functions are at the time of shipment. The functions assigned to port Nos. 000 to 015, 300 to 310, 313 and 314 can be changed via I/O parameters. (Refer to Nos. 30 to 56, No. 59 and 60 in 1, “I/O Parameters,” of Appendix, “List of Parameters.”)

I/O Interface List

Pin No.	Category	Port No.	Function	Cable color
1		-	+24-V input	Brown-1
2	Input	000	Program start	Red-1
3		001	General-purpose input	Orange-1
4		002	General-purpose input	Yellow-1
5		003	General-purpose input	Green-1
6		004	General-purpose input	Blue-1
7		005	General-purpose input	Purple-1
8		006	General-purpose input	Gray-1
9		007	Program specification (PRG No. 1)	White-1
10		008	Program specification (PRG No. 2)	Black-1
11		009	Program specification (PRG No. 4)	Brown-2
12		010	Program specification (PRG No. 8)	Red-2
13		011	Program specification (PRG No. 10)	Orange-2
14		012	Program specification (PRG No. 20)	Yellow-2
15		013	Program specification (PRG No. 40)	Green-2
16		014	General-purpose input	Blue-2
17		015	General-purpose input	Purple-2
18		016	General-purpose input	Gray-2
19		017	General-purpose input	White-2
20		018	General-purpose input	Black-2
21		019	General-purpose input	Brown-3
22		020	General-purpose input	Red-3
23		021	General-purpose input	Orange-3
24		022	General-purpose input	Yellow-3
25		023	General-purpose input	Green-3
26		024	General-purpose input	Blue-3
27		025	General-purpose input	Purple-3
28		026	General-purpose input	Gray-3
29		027	General-purpose input	White-3
30		028	General-purpose input	Black-3
31		029	General-purpose input	Brown-4
32		030	General-purpose input	Red-4
33		031	General-purpose input	Orange-4
34	Output	300	Alarm output	Yellow-4
35		301	Ready output	Green-4
36		302	Emergency-stop output	Blue-4
37		303	General-purpose output	Purple-4
38		304	General-purpose output	Gray-4
39		305	General-purpose output	White-4
40		306	General-purpose output	Black-4
41		307	General-purpose output	Brown-5
42		308	General-purpose output	Red-5
43		309	General-purpose output	Orange-5
44		310	General-purpose output	Yellow-5
45		311	General-purpose output	Green-5
46		312	General-purpose output	Blue-5
47		313	General-purpose output	Purple-5
48		314	General-purpose output	Gray-5
49		315	General-purpose output	White-5
50		-	0 V	Black-5

(14) General RS232C port connector 1 ..... Channel 1 of the two-channel RS232C port provided for connection of general RS232C equipment.
(Refer to I/O parameter Nos. 201 to 203.)

(15) General RS232C port connector 2 ..... Channel 2 of the two-channel RS232C port provided for connection of general RS232C equipment.
(Refer to I/O parameter Nos. 213 to 215.)

General RS232C Connector Specifications

Item	Overview			Details
Connector	D-sub, 9-pin (DTE)			XM2C-0942-502L (OMRON)
Connector name	S1/S2			
Maximum wiring distance	10 M			At 38400 bps
Interface standard	RS232C			
Connected unit	AT-compatible PC, etc.			Half-duplex communication
Connection cable				PC-AT standard 232C cross-cable
Terminal assignments	**1**	In	(CD)	(Carrier detection: Not used)
	2	In	RD	Received data (RXD)
	3	Out	SD	Transmitted data (TXD)
	4	Out	ER	Equipment ready (DTR)
	5	In	SG	Signal ground
	6	In	DR	Data set ready (DSR)
	7	Out	(RS)	(Request to send (RTS): Not used)
	8	In	(CS)	(Clear to send (CTS): Not used)
	9		NC	Not used

Use a cross-cable to connect to the RS232C port of a PC.

(16) Installation position of field network board ..... This is where a Fieldbus interface module is installed. In this example, this position is left unoccupied (no module is installed).

(17) Optional board ..... An optional field network board is installed.
A DeviceNet board is installed in this example.

(18) Expansion I/O board (optional) ..... Optional expansion I/O boards are installed in the example.

(19) Brake-power input connector

This connector is used to input the drive power for the actuator brake. 24 VDC must be supplied externally. If the specified brake power is not supplied, the actuator brake cannot be released. Be sure to supply the brake power for axes equipped with brake.
As for the brake power cable, use a shielded cable and connect the shield on the 24-V power side.
The bottom side of the connector connects to +24 V.

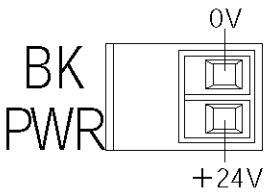

Brake Power Connector Specifications

Item	Overview	Details
Connector	Phoenix Contact	MC1.5/2-G-3.5
Cable-end connector	Phoenix Contact	MC1.5/2-ST-3.5 Applicable wire size: AWG28 ~ 14
Connector name	BK PWR	
Input voltage	24 VDC ± 10%	
Terminal assignments	0 V	24-V power ground
	+24 V	24-V power input

(20) Brake-release switch connector

This connector accepts a switch that releases the actuator brake externally from the controller. Shorting the COM and BKRMT* terminals of this connector will release the brake. Use this connector if you want to operate the actuator manually in the event of a power failure or error in the controller.

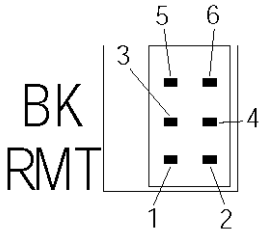

Brake-release Switch Connector Specifications

Item	Item		Overview
Connector	Hirose		DF11-6DP-2DS (*)
Connector name	BK RMT		
Connected unit	Brake-release switch		
Terminal assignments	**1**	BKRMT1 (BKRMT5)	Brake-release switch input for axis 1 (5)
	2	BKRMT2 (BKRMT6)	Brake-release switch input for axis 2 (6)
	3	BKRMT3	Brake-release switch input for axis 3
	4	BKRMT4	Brake-release switch input for axis 4
	5	COM (COM)	Switch input common
	6	COM (COM)	Switch input common

*) Mating connector --- Hirose socket: DF11-6DS-2C, crimp terminal: DF11-2428SC
The items in ( ) are for the brake unit for 5/6-axis type.

(21) Brake switch

This alternate switch with lock is used to release the axis brake. To operate the switch, pull it toward you and tilt.
Tilting the switch upward (RLS side) will release the brake forcibly, while tilting it downward (NOM) will enable an automatic brake control by the controller.

2. Explanation of Codes Displayed on the Panel Window

2.1 Application

Display	Priority (*1)	Description
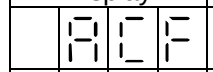	1	AC power is cut off (including momentary power failure or drop in power-source voltage).
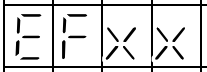	1	System-down level error
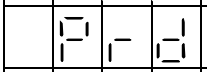	2	Writing data to the flash ROM.
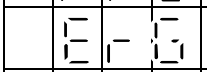	3	Emergency stop is being actuated (except during the update mode).
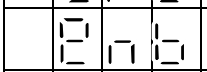	4	Enable switch (deadman switch/safety gate) OFF (except in the update mode)
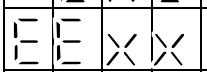	5	Cold-start level error
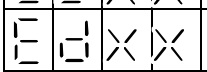	5	Cold-start level error
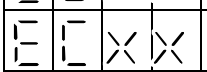	5	Operation-cancellation level error
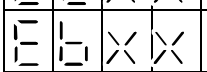	5	Operation-cancellation level error
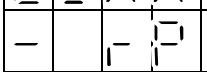	6	Waiting for a drive-source cutoff reset input (except during the update mode).
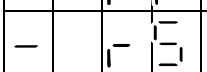	6	Operation is in pause (waiting for restart) (except during the update mode).
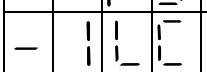	7	All servo axes are interlocked (except during the update mode).
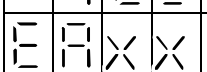	8	Message level error
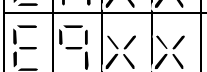	8	Message level error
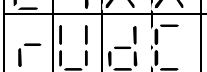	9	Core update mode
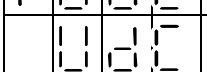	9	Core update is in progress.
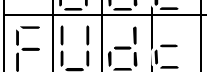	9	Core update has completed.
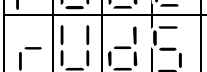	9	Slave update mode
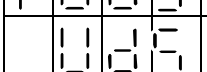	9	Slave update is in progress.
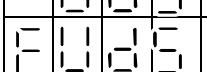	9	Slave update has completed.
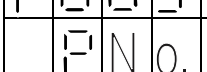	9	Running a program (last started program); “No.” indicates program number.
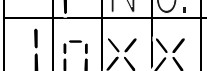	9	Initialization sequence number
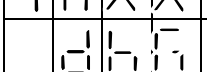	9	Debug mode
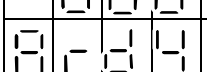	9	Ready status (auto mode)
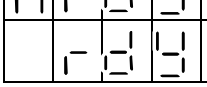	9	Ready status (manual mode)

(*1) The priority increases as the number decreases.

2.2 Core

Display	Priority (*1)	Description
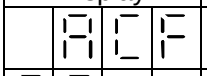	1	AC power is cut off (including momentary power failure or drop in power-source voltage).
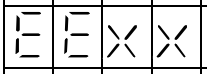	1	Cold-start level error
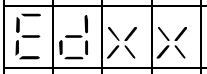	1	Cold-start level error
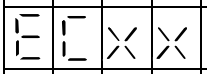	1	Operation-cancellation level error
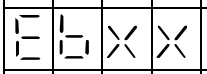	1	Operation-cancellation level error
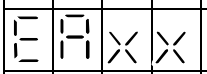	2	Message level error
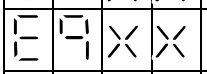	2	Message level error
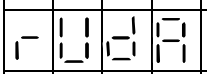	2	Application update mode
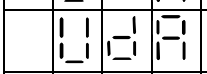	2	Application update is in progress.
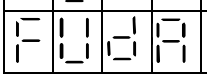	2	Application update has completed.
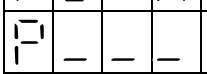	2	Hardware test mode process
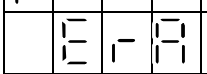	2	Clearing the application flash ROM.
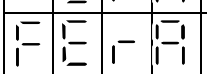	2	Application flash ROM has been cleared.
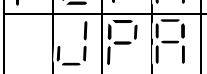	2	Jump to the application
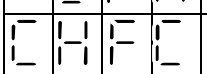	2	Core flash-ROM check process
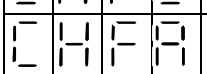	2	Application flash-ROM check process
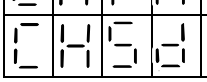	2	SDRAM check process

(*1) The priority increases as the number decreases.

2.3 Current Monitor and Variable Monitor

Other parameter Nos. 49 and 50 can be set up to monitor currents or variables on the panel window (main application version 0.09 or later).

(1) Current monitor

Currents of up to four axes having continuous axis numbers can be monitored.
Parameter settings
Other parameter No. 49 = 1
Other parameter No. 50 = Smallest axis number among the axes to be monitored
Example) If other parameter No. 49 is set to “1” and other parameter No. 50 to “3” for a 6-axis controller, the far-right segment digit will show the current for axis 3.

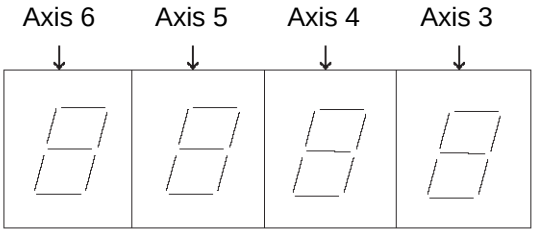

When data is written to the flash ROM or a software reset (restart) is executed after the parameter values have been input, the panel window will show the motor current to rating ratio (%) by a segment pattern, instead of “ready status” or “program run number.”
The segment display patterns and corresponding motor current to rating ratios (%) are shown below.

	0 < Motor current to rating ratio (%) ≤ 25		100 < Motor current to rating ratio (%) ≤ 150
	25 < Motor current to rating ratio (%) ≤ 50		150 < Motor current to rating ratio (%) ≤ 200
	50 < Motor current to rating ratio (%) ≤ 75		200 < Motor current to rating ratio (%)
	75 < Motor current to rating ratio (%) ≤ 100		

Thick lines indicate illuminated segments.

(2) Variable monitor
The contents of global integer variables can be displayed on the panel window.
Positive integers of 1 to 999 can be displayed.
Parameter settings
Other parameter No. 49 = 2
Other parameter No. 50 = Variable number of the global integer variable to be monitored

When data is written to the flash ROM or a software reset (restart) is executed after the parameter values have been input, the panel window will show the content of the global integer variable, instead of “ready status” or “program run number.” The far-left segment digit should read “U.”
Display example)

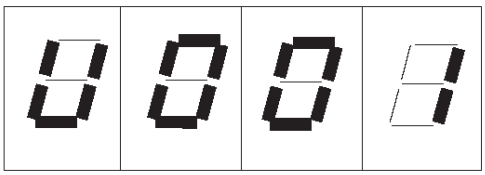

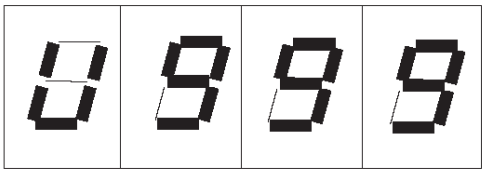

Chapter 5 Specifications

1. Controller Specifications

1.1. P Type (Standard Specification)

	Controller with 1 to 6 axes	
Total output when maximum number of axes are connected	Single-phase specification: 1600W	Three-phase specification: 2400W
Control power input	Single-phase, 200 ~ 230 VAC ± 10%	
Motor power input	Single-phase specification, 200 ~ 230 VAC ± 10%	Three-phase specification, 200 ~ 230 VAC ± 10%
Power-source frequency	50/60 Hz	
Insulation resistance	10 MΩ min. (Measured at 500 VDC between the power terminal and I/O terminals and between the external terminals (together) and case)	
Withstand voltage	1500 VAC for 1 minute Note 1)	
Operating temperature range	0 ~ 40°C	
Operating humidity range	10% ~ 95% (Non-condensing; conforming to JIS C3502 RH-2)	
Storage temperature range	-25°C ~ 70°C (Excluding the battery)	
Protection class	IP20	
Drive-source cutoff method	Internal relay	
Emergency-stop input	Contact-B input (Internal power-supply type)	
Emergency-stop action	Deceleration stop + Regenerative brake by timer (failsafe)	
Enable input	Contact-B input (Internal power-supply type)	
System ready output	No-voltage contact (relay) output; for generation of equipment ready signal based on the wired-OR logic among multiple equipment. Max. 500 mA (24 VDC).	
Axis control method	AC full digital servo	
Position detection methods	15-bit incremental encoder (Wire-saving type) 15-bit rotation data backup absolute encoder Both have a control resolution of 14 bits (16384 pulses)	
Batteries	For backup of absolute data: AB-5 by IAI For backup of system memory: CR2032 by Toshiba Battery	
Speed setting	1 mm/sec ~ 2500 mm/sec	
Acceleration/deceleration setting	0.01 G ~ 1 G	
Programming language	Super SEL language	
Program steps	6000 steps (total)	
Number of positions	4000 positions (total) Note 2)	
Number of programs	64 programs	
Multi-tasking	16 programs	
Storage device	Flash ROM + SRAM battery backup	
Data input methods	Teaching pendant or PC software	
Absolute brake unit (brake-type or absolute-specification actuator only)	Built-in brake drive circuit Driven by over-excitation at 90 V, released at 45 V (steady state) No limitation on how many brake axes can be controlled (all 6 axes can be equipped with brake).	
Protective functions	Motor overcurrent, overload, motor-driver temperature check, overload check, encoder-open detection	
Regenerative resistance	Built-in (1 kΩ, 20 W); expandable by external unit	
Accessory	I/O flat cable	
Standard inputs	32 points or 16 points, NPN or PNP (set before shipment)	
Standard outputs	16 points or 32 points, NPN or PNP (set before shipment)	

RS232C port for teaching serial interface	Enabled only in the manual operation mode. IAI's dedicated teaching pendant or ANSI teaching pendant (selected by a switch)
RS232C port for general PC connection	Dedicated 2-channel RS232C, 9-pin DTE specification Half-duplex at speeds up to 115.2 kbps (1 channel) or up to 76.8 kbps (simultaneous communication with 2 channels) Note 3)
Expanded inputs/outputs (optional)	Expandable to 3 slots
Fieldbus interface (optional)	Profibus-DP (IN: 32 bytes max. / OUT: 32 bytes max.) DeviceNet (IN: 32 bytes max. / OUT: 32 bytes max.) CC-Link (IN: 32 bytes max. / OUT: 32 bytes max.)
Ethernet interface (optional)	Packet communication (client-server communication) by TCP/IP using SEL language X-SEL PC software connection MODBUS/TCP remote I/O (IN: 32 bytes max. / OUT: 32 bytes max.)

Note 1) The withstand voltage of the actuator motor is 1000 V for 1 minute.
When performing a withstand voltage test with the controller and actuator connected, make sure the test voltage and duration will not exceed 1000 V and 1 minute, respectively.

Note 2) The X-SEL-J/K type supports 3000 positions.

Note 3) If one RS232C channel is used at a communication speed of 115.2 kbps, use the other channel at 38.4 kbps or below. If these speeds are exceeded, an overrun error or other problems will occur and successful communication cannot be guaranteed.

* RCS2-R**7/LS/LSA series actuators cannot be connected as axis 5 or 6.

1.2 Q Type (Global Specification)

	Controller with 1 to 6 axes	
Total output when maximum number of axes are connected	Single-phase specification: 1600W	Three-phase specification: 2400W
Control power input	Single-phase, 200 ~ 230 VAC ± 10%	
Motor power input	Single-phase specification, 200 ~ 230 VAC ± 10%	Single-phase specification, 200 ~ 230 VAC ± 10%
Power-source frequency	50/60 Hz	
Insulation resistance	10 MΩ min. (Measured at 500 VDC between the power terminal and I/O terminals and between the external terminals (together) and case)	
Withstand voltage	1500 VAC for 1 minute (Caution)[Note 1)]	
Operating temperature range	0 ~ 40°C	
Operating humidity range	10% ~ 95% (Non-condensing; conforming to JIS C3502 RH-2)	
Storage temperature range	-25°C ~ 70°C (Excluding the battery)	
Protection class	IP20	
Drive-source cutoff method	External safety circuit	
Emergency-stop input	Contact-B input (External power-supply type, redundant)	
Emergency-stop action	Deceleration stop + Regenerative brake by timer (failsafe)	
Enable input	Contact-B input (External power-supply type, redundant)	
System ready output	No-voltage contact (relay) output; for generation of equipment ready signal based on the wired-OR logic among multiple equipment. Max. 500 mA (24 VDC).	
Axis control method	AC full digital servo	
Position detection methods	15-bit incremental encoder (Wire-saving type) 15-bit rotation data backup absolute encoder Both have a control resolution of 14 bits (16384 pulses)	
Batteries	For backup of absolute data: AB-5 by IAI For backup of system memory: CR2032 by Toshiba Battery	
Speed setting	1 mm/sec ~ 2500 mm/sec	
Acceleration/deceleration setting	0.01 G ~ 1 G	
Programming language	Super SEL language	
Program steps	6000 steps (total)	
Number of positions	4000 positions (total) [Note 2)]	
Number of programs	64 programs	
Multi-tasking	16 programs	
Storage device	Flash ROM + SRAM battery backup	
Data input methods	Teaching pendant or PC software	
Brake unit (brake-type actuator only)	Built-in brake drive circuit Driven by over-excitation at 90 V, released at 45 V (steady state) No limitation on how many brake axes can be controlled (all 6 axes can be equipped with brake).	
Protective functions	Motor overcurrent, overload, motor-driver temperature check, overload check, encoder-open detection	
Regenerative resistance	Built-in (1 kΩ, 20 W); expandable by external unit	
Accessory	I/O flat cable	
Standard inputs	32 points or 16 points, NPN or PNP (set before shipment)	
Standard outputs	16 points or 32 points, NPN or PNP (set before shipment)	

RS232C port for teaching serial interface	Enabled only in the manual operation mode. IAI's dedicated teaching pendant or ANSI teaching pendant (selected by a switch)
RS232C port for general PC connection	Dedicated 2-channel RS232C, 9-pin DTE specification Half-duplex at speeds up to 115.2 kbps (1 channel) or up to 76.8 kbps (simultaneous communication with 2 channels) Note 3)
Expanded inputs/outputs (optional)	Expandable to 3 slots
Fieldbus interface (optional)	Profibus-DP (IN: 32 bytes max. / OUT: 32 bytes max.) DeviceNet (IN: 32 bytes max. / OUT: 32 bytes max.) CC-Link (IN: 32 bytes max. / OUT: 32 bytes max.)
Ethernet interface (optional)	Packet communication (client-server communication) by TCP/IP using SEL language X-SEL PC software connection MODBUS/TCP remote I/O (IN: 32 bytes max. / OUT: 32 bytes max.)

Note 1) The withstand voltage of the actuator motor is 1000 V for 1 minute.
When performing a withstand voltage test with the controller and actuator connected, make sure the test voltage and duration will not exceed 1000 V and 1 minute, respectively.
Note 2) The X-SEL-J/K type supports 3000 positions.
Note 3) If one RS232C channel is used at a communication speed of 115.2 kbps, use the other channel at 38.4 kbps or below. If these speeds are exceeded, an overrun error or other problems will occur and successful communication cannot be guaranteed.
* RCS2-R**7/LS/LSA series actuators cannot be connected as axis 5 or 6.

1.3 Differences between Q Type (Global Specification) and P Type (Standard Specification)

Users require different safety categories in accordance with the overall configuration of their equipment.
The Q type (global specification) controller has no built-in drive-source cutoff circuit so that the user can design their equipment to a desired safety category.
The P type (standard specification) controller has a built-in circuit for cutting off the drive source inside the controller using a relay.
The differences between these two specifications are summarized below. Items not specified in the table are basically the same between the two specifications.

Differences between Global Specification and Standard Specification

Item	Q type (global specification)	P type (standard specification)
Power input part	Motor power supply and control power supply are separated.	
Safety circuit configuration	Redundant circuits are supported.	Redundant circuits are not supported.
Drive-source cutoff circuit	Installed externally.	Built-in motor-power cutoff relay
Highest safety category supported	Safety category 4 (The user is responsible for demonstrating conformance.)	Safety category B
System I/O connector	18-pin, 2-row/2-piece connector by Phoenix Contact	
ANSI TP	Supported (redundant safety circuits).	Supported (redundant safety circuits are not supported).

TP: Teaching pendant

2. External I/O Specifications

2.1. NPN Specification

(1) Input part

External Input Specifications (NPN Specification)

Item	Specification
Input voltage	24 VDC ±10%
Input current	7 mA per circuit
ON/OFF voltage	ON voltage --- 16.0 VDC min. OFF voltage --- 5.0 VDC max.
Insulation method	Photocoupler insulation
External devices	[1] No-voltage contact (minimum load of approx. 5 VDC/1 mA) [2] Photoelectric/proximity sensor (NPN type) [3] Sequencer transistor output (open-collector type) [4] Sequencer contact output (minimum load of approx. 5 VDC/1 mA)

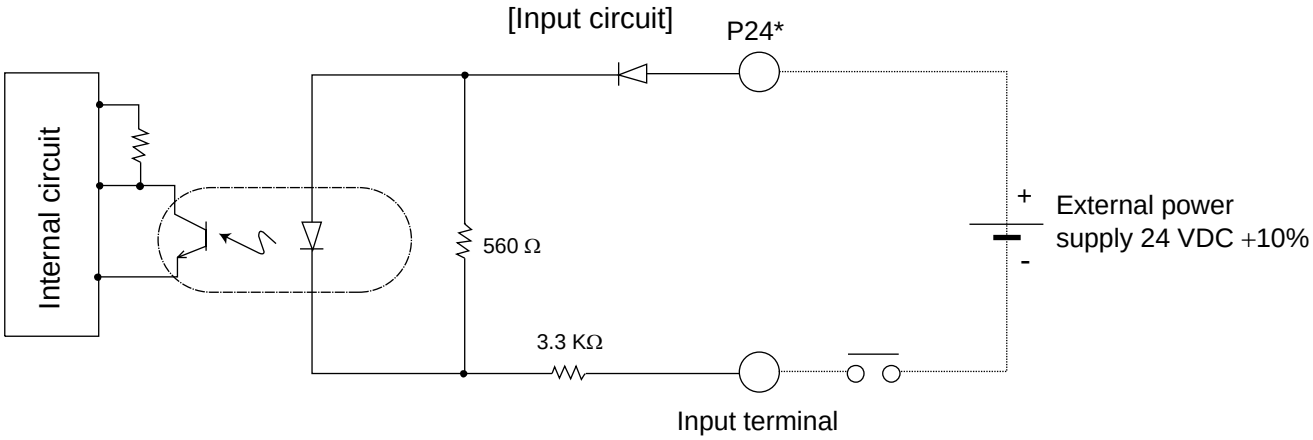

* P24: I/O interface pin No. 1

⚠ Caution

If a non-contact circuit is connected externally, malfunction may result from leakage current. Use a circuit in which leakage current in a switch-off state does not exceed 1 mA.

⊙ X-SEL controller's input signal

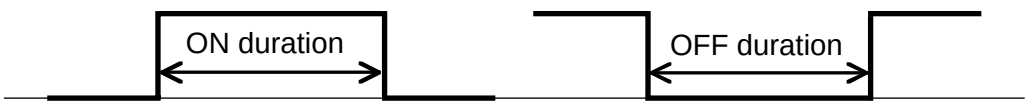

At the default settings, the system recognizes the ON/OFF durations of input signals if they are approx. 4 msec or longer. The ON/OFF duration settings can also be changed using I/O parameter No. 20 (input filtering frequency).

(2) Output part

External Output Specifications (NPN Specification)

Item	Specification	
Load voltage	24 VDC	TD62084 (or equivalent)
Maximum load current	100 mA per point, 400 mA per 8 ports Note)	
Leakage current	0.1 mA max. per point	
Insulation method	Photocoupler insulation	
External devices	[1] Miniature relay [2] Sequencer input unit	

Note) 400 mA is the maximum total load current of every eight ports from output port No. 300. (The maximum total load current of output port No. 300 + n to No. 300 + n + 7 is 400 mA, where n is 0 or a multiple of 8.)

[Output circuit]

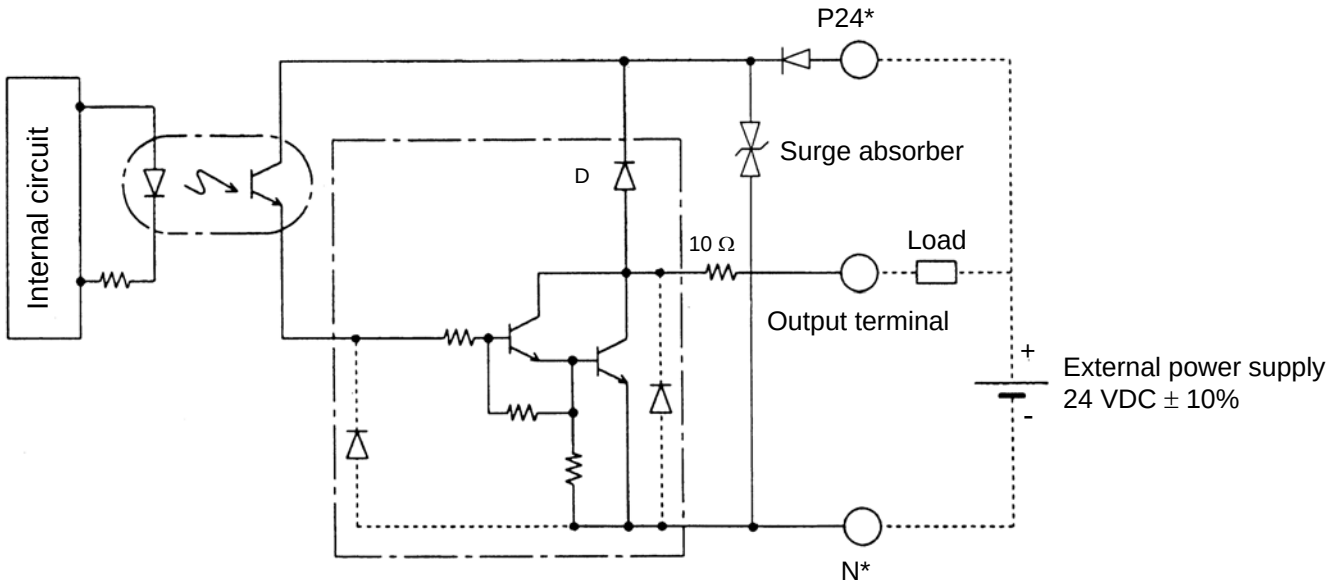

* P24: I/O interface pin No. 1
* N: I/O interface pin No. 50

Caution

In the event that the load is short-circuited or current exceeding the maximum load current is input, the overcurrent protection circuit will be actuated to cut off the circuit. However, give due consideration to the circuit connection layout to prevent short-circuit or overcurrent.

2.2. PNP Specification

(1) Input part

External Input Specifications (PNP Specification)

Item	Specification
Input voltage	24 VDC ±10%
Input current	7 mA per circuit
ON/OFF voltage	ON voltage --- 8 VDC max. OFF voltage --- 19 VDC min.
Insulation method	Photocoupler insulation
External devices	[1] No-voltage contact (minimum load of approx. 5 VDC/1 mA) [2] Photoelectric/proximity sensor (PNP type) [3] Sequencer transistor output (open-collector type) [4] Sequencer contact output (minimum load of approx. 5 VDC/1 mA)

[Input circuit]

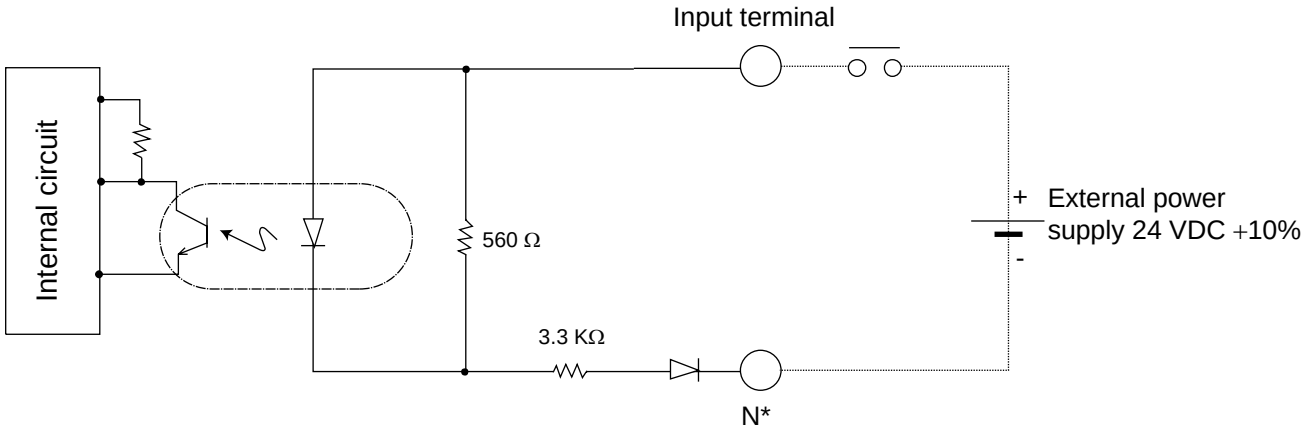

* N: I/O interface pin No. 50

⚠ Caution

If a non-contact circuit is connected externally, malfunction may result from leakage current. Use a circuit in which leakage current in a switch-off state does not exceed 1 mA.

⊙ X-SEL controller's input signal

At the default settings, the system recognizes the ON/OFF durations of input signals if they are approx. 4 msec or longer. The ON/OFF duration settings can also be changed using I/O parameter No. 20 (input filtering frequency).

(2) Output part

External Output Specifications

Item	Specification	
Load voltage	24 VDC	TD62784 (or equivalent)
Maximum load current	100 mA per point, 400 mA per 8 ports Note)	
Leakage current	0.1 mA max. per point	
Insulation method	Photocoupler insulation	
External devices	[1] Miniature relay [2] Sequencer input unit	

Note) 400 mA is the maximum total load current of every eight ports from output port No. 300. (The maximum total load current of output port No. 300 + n to No. 300 + n + 7 is 400 mA, where n is 0 or a multiple of 8.)

[Output circuit]

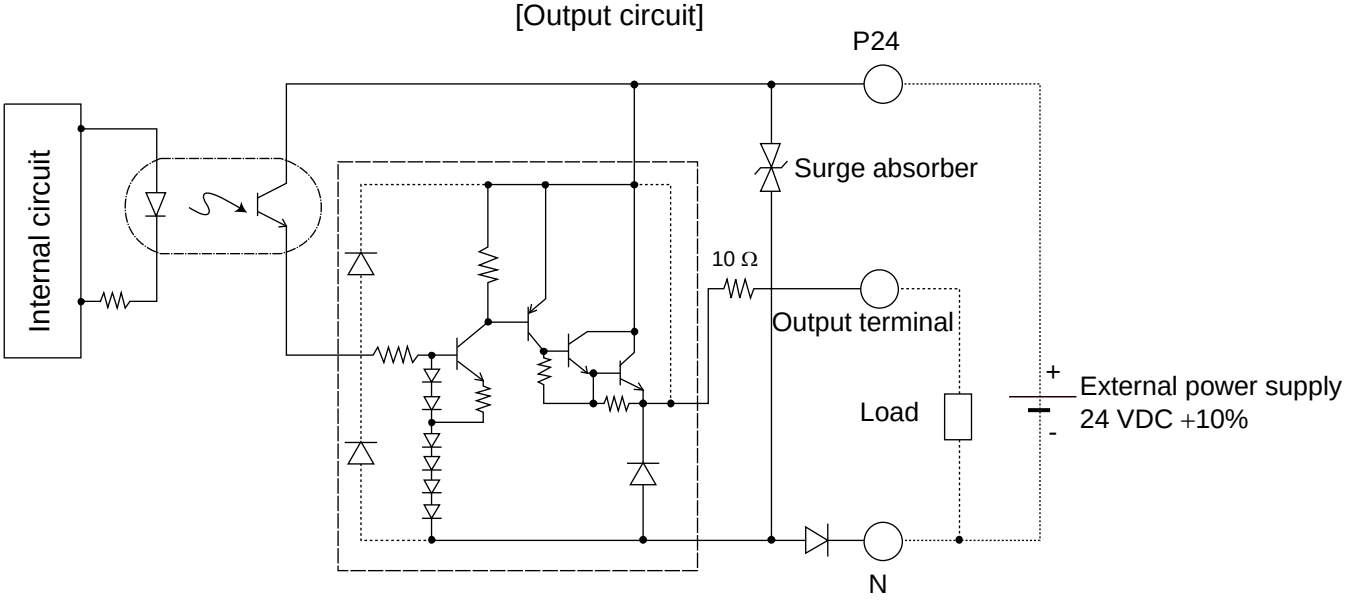

* P24: I/O interface pin No. 1
* N: I/O interface pin No. 50

Caution

In the event that the load is short-circuited or a current exceeding the maximum load current is input, the overcurrent protection circuit will be actuated to cut off the circuit. However, give due consideration to the circuit connection layout to prevent short-circuit or overcurrent.

3. Power-Source Capacity and Heat Output

The power consumption and heat output of the X-SEL controller will vary depending on the number of connected axes and I/O configuration. This section explains how to estimate the power-source capacity and heat output of your X-SEL controller.

The X-SEL controller requires the following power supplies:

A. Control power
Power to the logic control part of the controller. Single-phase 200 VAC must be supplied.
B. Motor power
Power for driving the actuator. Three-phase (single-phase) 200 VAC must be supplied.
* A single-phase power source is required only for controllers of single-phase specification.
C. I/O power
If a DIO card is installed in an I/O slot, 24 VDC must be supplied.
D. Brake power
24 VDC must be supplied only when a brake-type actuator is driven.

(1) Power-source capacity and heat output of the control part
The control part consists of the standard units connected to every controller and optional units such as an I/O card. Therefore, the power consumption and heat output of the control part will vary depending on the system configuration.
Additionally, heat outputs from the units operated by an external power source must also be considered.
The table below lists the power consumptions of various controller units.

List of Power Consumptions of Control Part

		Control power supply		External power source		Quantity
		Internal consumption	External consumption	Internal consumption	External consumption	
Base part		13.19 W				1
Driver	Per board	2.63 W				1 ~ 3
Encoder	Per axis	1 W	1.5 W			1 ~ 6
Fan unit	Per fan	2.4 W				3 ~ 6
Axis sensor	Per axis	1.92 W				0 ~ 6
DIO card	DIO (48 points)	2.5 W		6.1 W		0 ~ 4
	DIO (96 points)	3.5 W		11.26 W		0 ~ 4
Network module	DeviceNet	1 W		0.72 W		0 ~ 1
	CC-Link	1 W		0.5 W		0 ~ 1
	Profibus-DP	1.75 W				0 ~ 1
	Ethernet	2.25 W				0 ~ 1
Teaching pendant	IAI standard		1.5 W			0 ~ 1
	ANSI		4.08 W			0 ~ 1
Brake	Per axis			2.5 W	5.8 W	0 ~ 6

[1] Control power-source capacity
The power-source capacity of the control power supply is obtained by applying the efficiency coefficient and power factor to the sum of all power consumptions of controlled units, based on the applicable values shown in the table.

Control power-source capacity [VA] =
(Power consumption of each controlled unit x Quantity) ÷ 0.7 (Efficiency coefficient) ÷ 0.6 (Power factor)

[2] Heat output of the control system
The heat output of the controller's control system is obtained as the total sum of all internal power consumptions of controlled units and internal power consumptions of external power sources, based on the applicable values shown in the table.

Heat output from control system [W] =
(Internal power consumption of each controlled unit x Quantity) + (Internal power consumption of each external power source x Quantity).

[3] I/O power-source capacity
The I/O power-source capacity (24 VDC) is obtained as the total sum of all power consumptions of external power sources for DIO cards.

I/O power-source capacity [W] =
(Internal power consumption of each external power source for DIO x Quantity)

[4] Brake power-source capacity
The brake power-source capacity (24 VDC) is obtained as the total sum of all power consumptions of external power sources for brakes.

Brake power-source capacity [W] =
(Power consumption of each external power source for brake x Quantity)

(2) Power consumption and heat output of the motor drive part
Both the power consumption and heat output of the motor drive part will vary depending on the number of axes connected to the controller and wattage configuration.
The table below lists per-axis motor power consumptions.

List of Motor Drive Powers

	Power [W] (rated output)	Power ÷ 0.6 [Power factor] [VA]	Output stage loss [W]
20 W	15.6	26.0	1.58
30 W	27.6	46.0	2.07
60 W	83.0	138.3	3.39
100 W	140.1	233.5	6.12
150 W	196.9	328.2	8.30
200 W	252.6	421.0	9.12
400 W	477.5	795.8	19.76
600 W	698.2	1163.7	27.20
750 W	912.8	1521.3	29.77
200W (for linear type)	281.4	469.0	9.78
300W (for linear type)	396.9	661.5	11.58
1000W (for linear type)	1106.7	1844.5	36.50

The power values in the table include the motor drive power, copper loss and driver output loss.

[1] Motor power-source capacity
The power-source capacity of the motor power supply is obtained as the total sum of all powers for the number of actuators used, based on the applicable values shown in the table.

Motor power-source capacity [VA] = (Power of each axis ÷ 0.6 [Power factor])

[2] Heat output of the motor power supply
The heat output from the controller's motor power supply is obtained as the total sum of all output stage losses for the number of actuators used, based on the applicable values shown in the table.

Heat output from motor power supply [W] = (Output stage loss of each axis)

(3) Calculation example
Obtain the power-source capacities and heat outputs when a controller of the following specifications is used.

Actuator for axis 1: 200 W Actuator for axis 2: 200 W Actuator for axis 3: 100 W with brake
Actuator for axis 4: 60 W Standard controller with standard DIO
Options: DeviceNet, teaching pendant (IAI's standard type)

[1] Control power-supply capacity

$$\{13.19 + 2.63 \times 2 + (1 + 1.5) \times 4 + 2.4 \times 4 + 2.5 \times 1 + 1 + 1.5\} \div 0.7 \div 0.6 \cong 102.5 \text{ [VA]}$$

Base part, Drivers, Encoders, Fan units, DIO, DeviceNet, Teaching pendant

[2] Heat output from control system

$$\{13.19 + 2.63 \times 2 + 1 \times 4 + 2.4 \times 4 + 2.5 + 1\} + 6.1 \times 1 + 0.72 + 2.5 \times 1 \cong 44.9 \text{ [W]}$$

Base part, Drivers, Encoders, Fan units, DIO, DIO, DeviceNet, Brake

[3] I/O power-source capacity (24 VDC)
6.1 x 1 = 6.1 [W]

[4] Brake power-source capacity (24 VDC)
(2.5 + 5.8) x 1 = 8.3 [W]

[5] Motor power-source capacity
421 + 421 + 233.5 + 138.3 = 1213.8 [VA]

[6] Heat output from motor power supply
9.12 + 9.12 + 6.12 + 3.39 ≅ 27.8 [W]

[7] Power-source capacity = [1] Control power-source capacity + [5] Motor power-source capacity
= 102.5 + 1213.8 = 1316.3 [VA]

[8] Heat output = [2] Heat output from control system + [6] Heat output from motor power supply
= 44.9 + 27.8 = 72.7 [W]

4. External Dimensions

4.1 P/Q Type (Three-phase Standard Specification, Single-phase Global Specification, Single-phase Standard Specification) 4-axis Controller

External views of enclosures for various 4-axis controllers are shown below (the external enclosure dimensions are the same for 1-axis to 4-axis controllers).

Fig. 4-1 P/Q Type 4-axis Controller (Three-phase Standard Specification, Single-phase Global Specification, Single-phase Standard Specification)

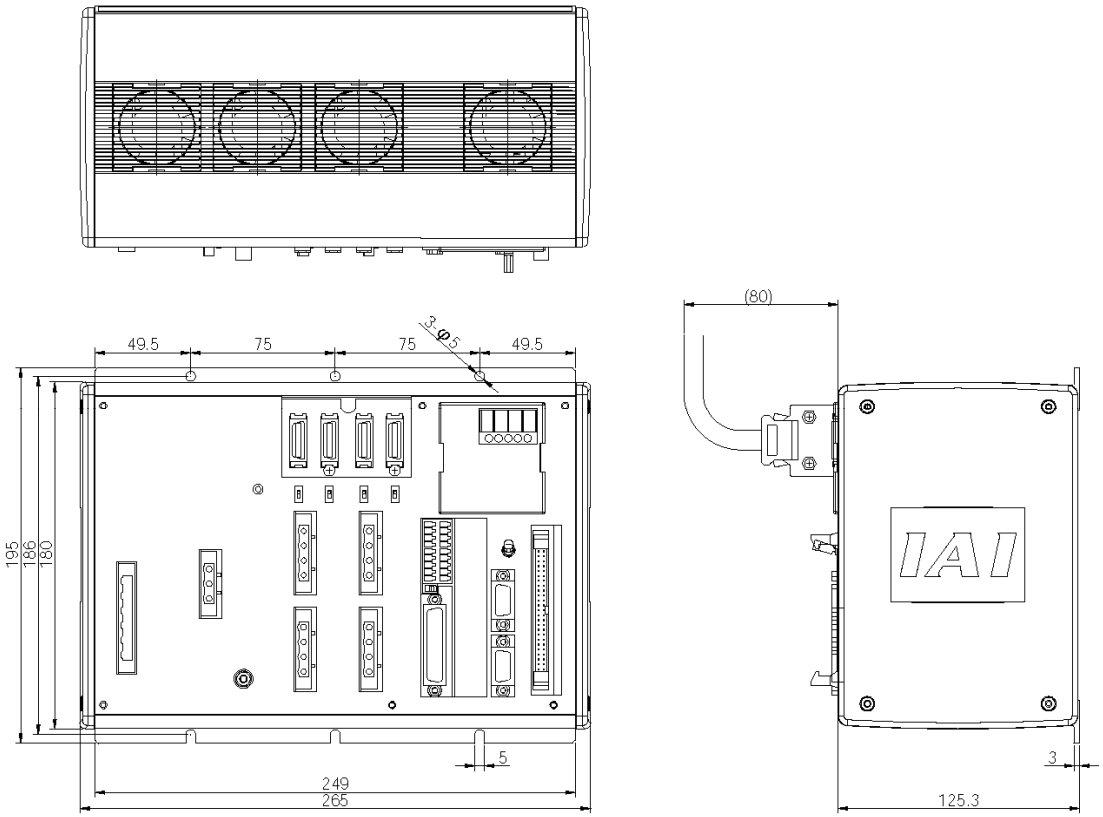

Fig. 4-2 P/Q Type 4-axis Controller with Absolute Brake Unit (Three-phase Standard Specification, Single-phase Global Specification, Single-phase Standard Specification)

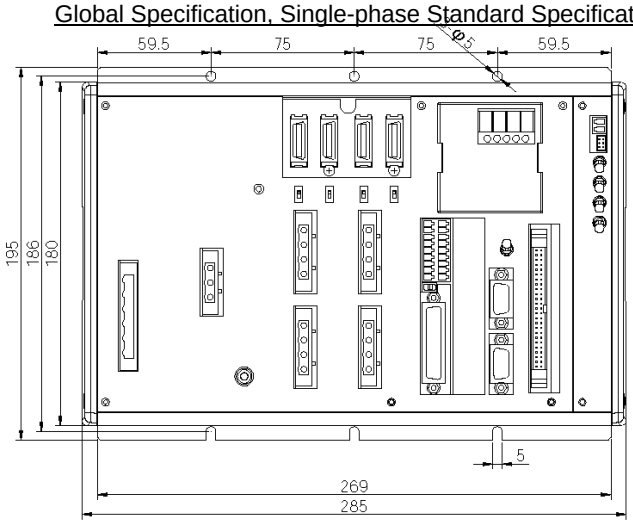

Fig. 4-3 P/Q Type 4-axis Controller with Expansion I/O Board (Three-phase Standard Specification, Single-phase Global Specification, Single-phase Standard Specification)

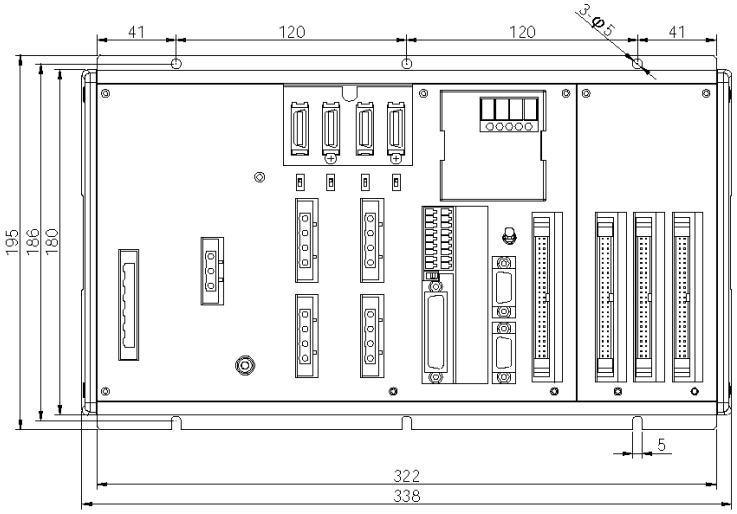

Fig. 4-4 P/Q Type 4-axis Controller with Expansion I/O Board + Absolute Brake Unit (Three-phase Standard Specification, Single-phase Global Specification, Single-phase Standard Specification)

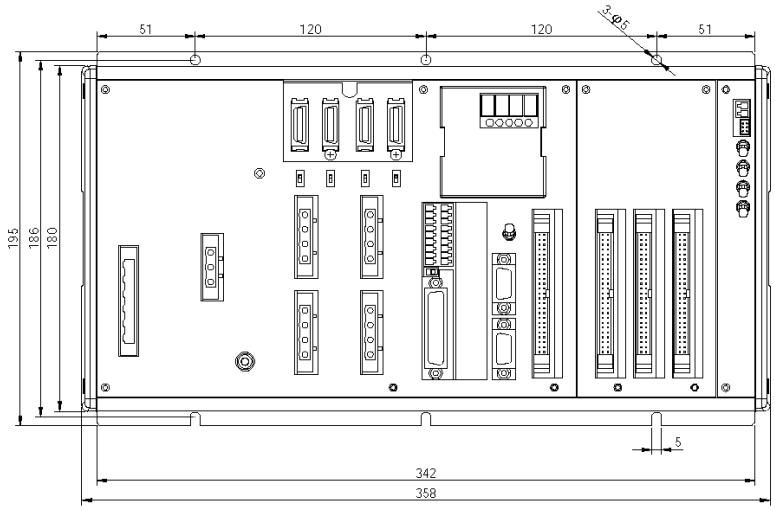

4.2 P/Q Type (Standard Specification) 6-axis Controller (Three-phase Standard Specification, Single-phase Global Specification, Single-phase Standard Specification)

External views of enclosures for various 6-axis controllers are shown below (the external enclosure dimensions are the same for 5-axis and 6-axis controllers).

Fig. 4-5 P/Q Type 6-axis Controller with Expansion I/O Board (Three-phase Standard Specification, Single-phase Global Specification, Single-phase Standard Specification)

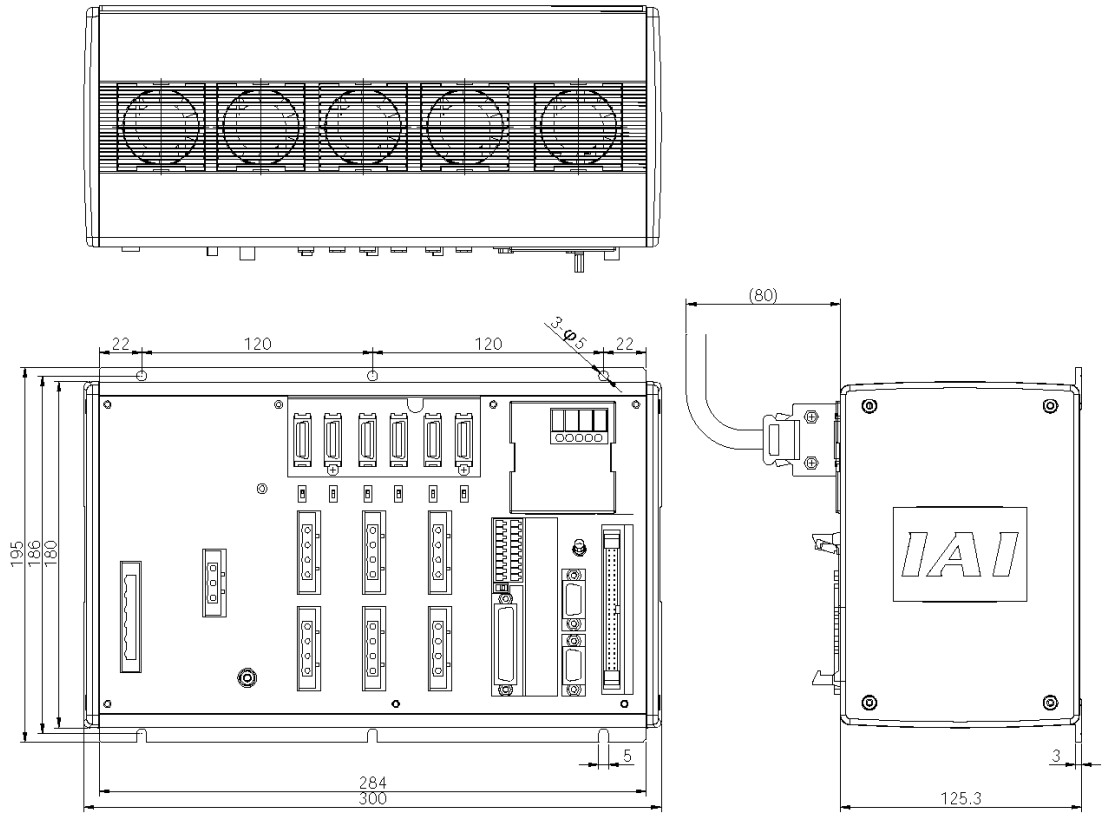

Fig. 4-6 P/Q Type 6-axis Controller with Absolute Brake Unit (Three-phase Standard Specification, Single-phase Global Specification, Single-phase Standard Specification)

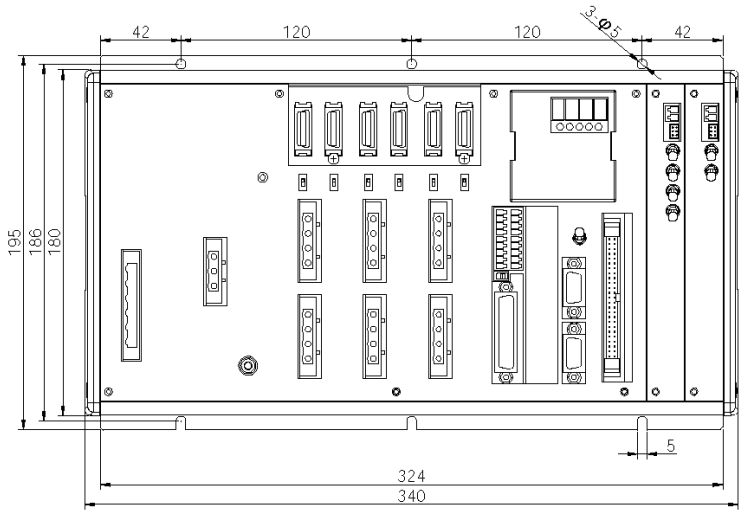

Fig. 4-7 P/Q Type 6-axis Controller (Three-phase Standard Specification, Single-phase Global Specification, Single-phase Standard Specification)

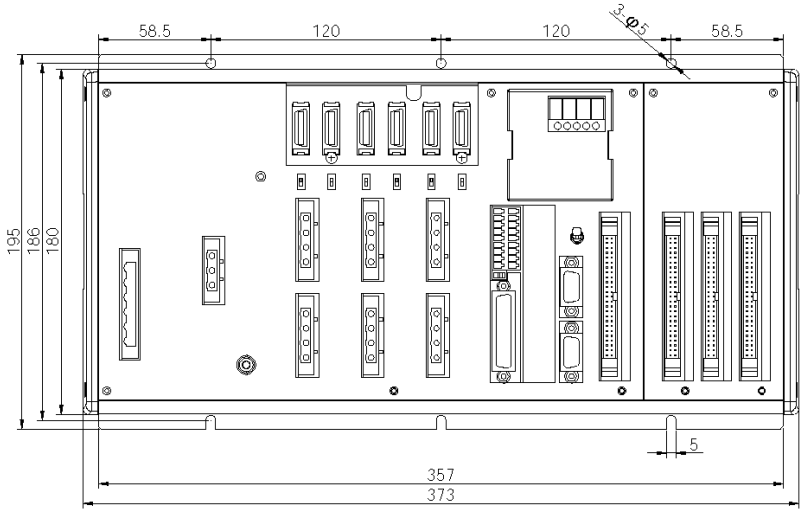

Fig. 4-8 P/Q Type 6-axis Controller with Expansion I/O Board + Absolute Brake Unit (Three-phase Standard Specification, Single-phase Global Specification, Single-phase Standard Specification)

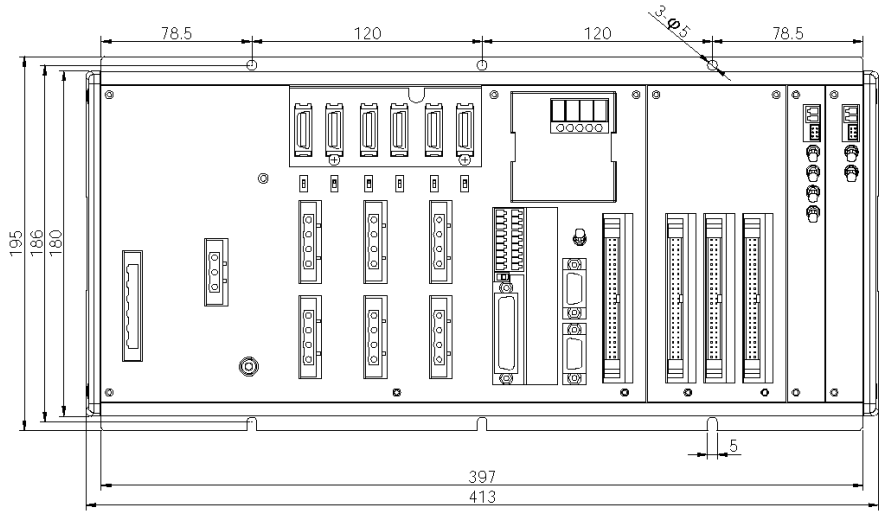

4.3 Q Type (Three-phase Global Specification) 4-axis Controller

External views of enclosures for various 4-axis controllers are shown below (the external enclosure dimensions are the same for 1-axis to 4-axis controllers).

Fig. 4-9 Q Type 4-axis Controller (Three-phase Global Specification)

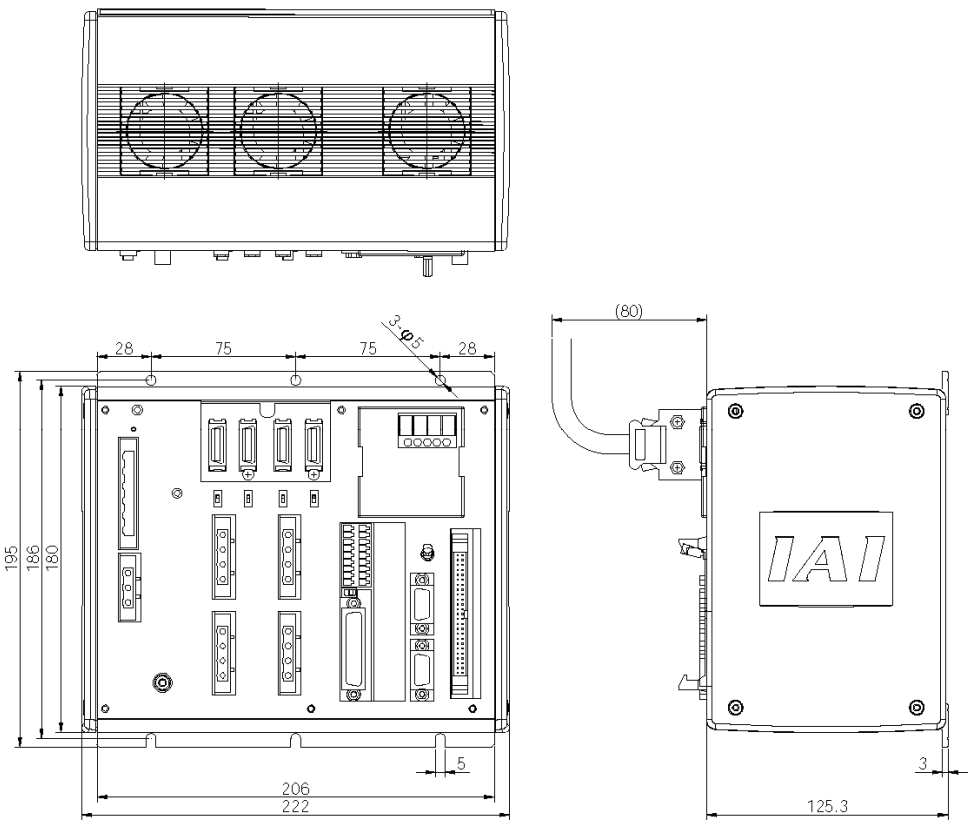

Fig. 4-10 Q Type 4-axis Controller with Absolute Brake Unit (Three-phase Global Specification)

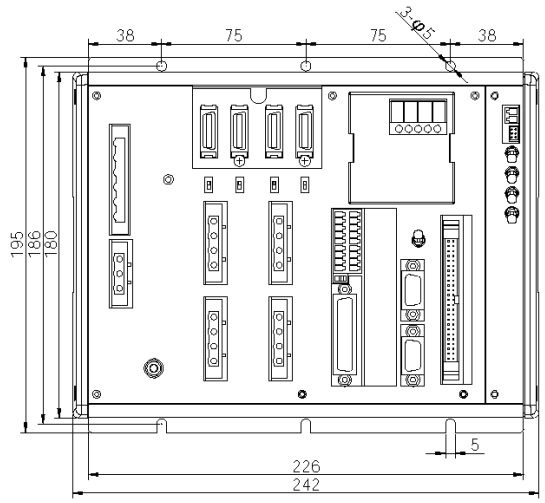

Fig. 4-11 Q Type 4-axis Controller with Expansion I/O Board

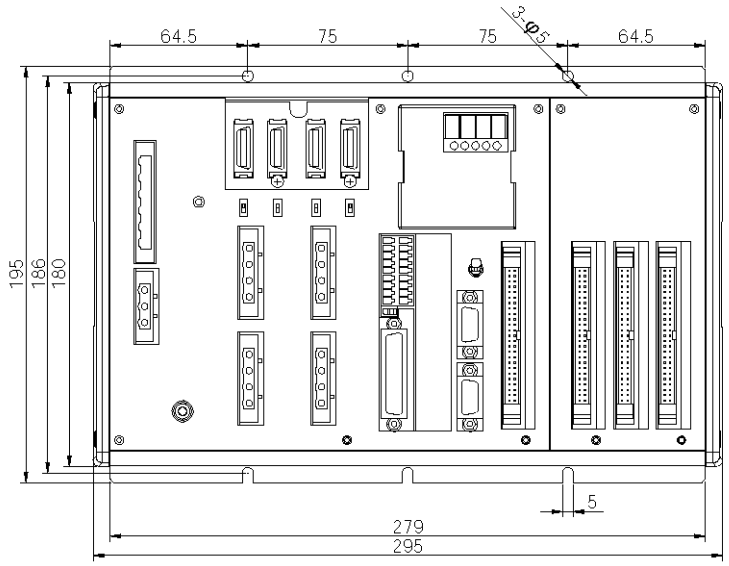

Fig. 4-12 Q Type 4-axis Controller with Expansion I/O Board + Absolute Brake Unit

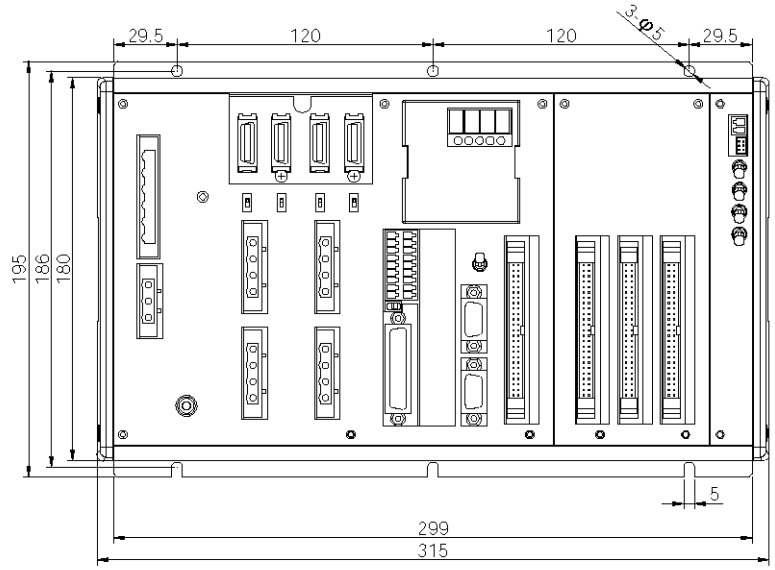

4.4 Q Type (Three-phase Global Specification) 6-axis Controller

External views of enclosures for various 6-axis controllers are shown below (the external enclosure dimensions are the same for 5-axis and 6-axis controllers).

Fig. 4-13 Q Type 6-axis Controller (Three-phase Global Specification)

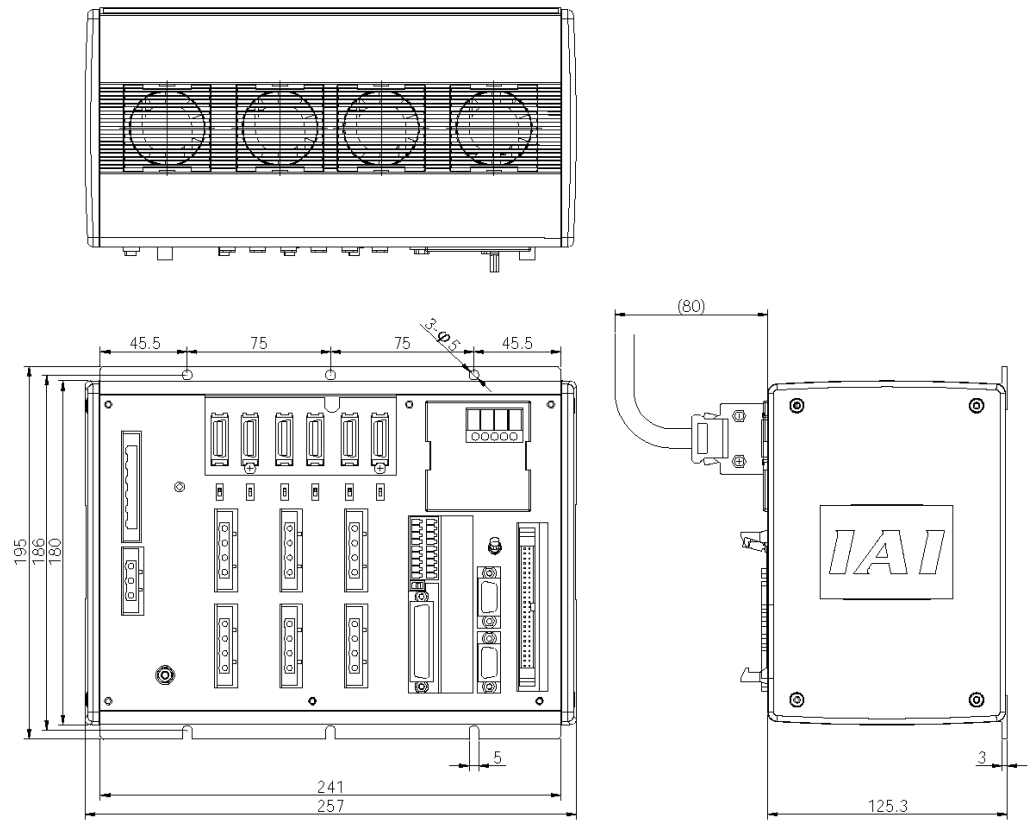

Fig. 4-14 Q Type 6-axis Controller with Absolute Brake Unit (Three-phase Global Specification)

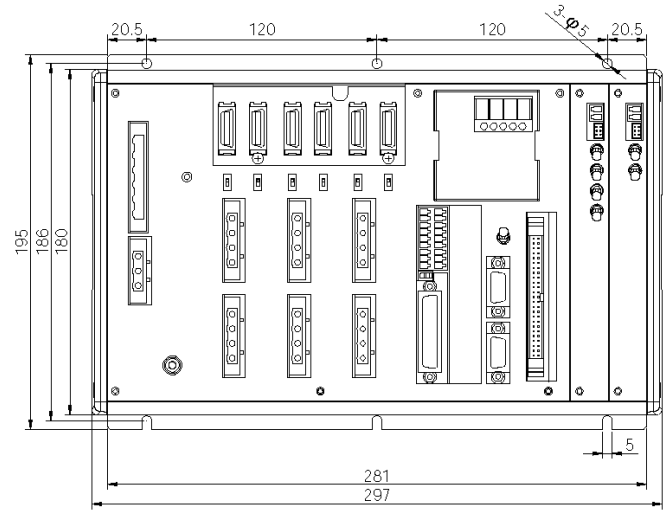

Fig. 4-15 Q Type 6-axis Controller with Expansion I/O Board (Three-phase Global Specification)

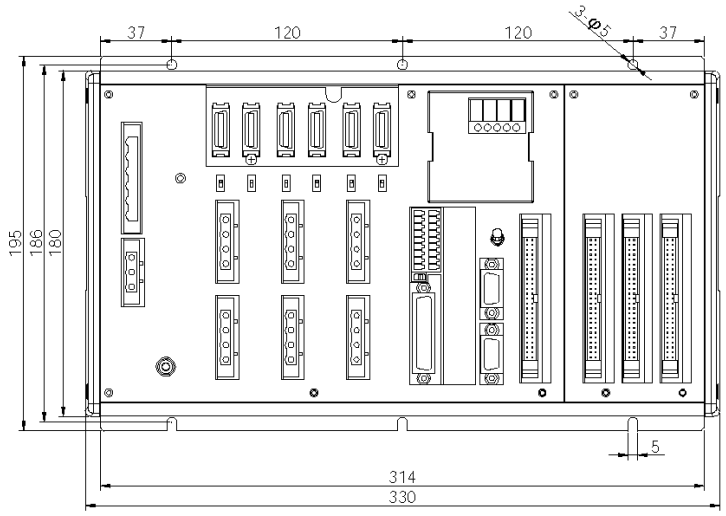

Fig. 4-16 Q Type 6-axis Controller with Expansion I/O Board + Absolute Brake Unit (Three-phase Global Specification)

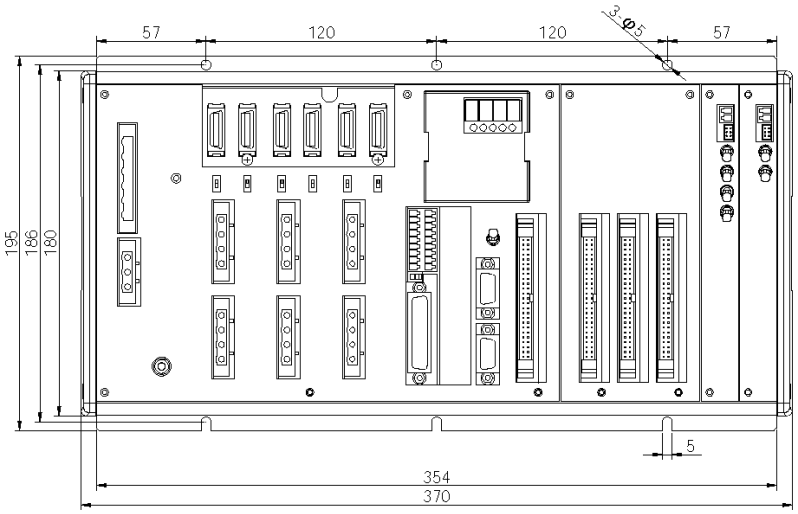

Chapter 6 Safety Circuit

The circuit configuration for embodying safety actions such as emergency stop is different between the standard specification and global specification of the X-SEL controller.
The standard controller has a built-in drive-source cutoff circuit conforming to safety category B.
The global controller has no built-in drive-source cutoff circuit so that the user can configure an external safety circuit appropriate for their equipment configuration.

1. Items to Notes

The following explains the items to note regarding the safety circuit, which apply to both the standard specification and global specification.

1. Overview of emergency-stop action
   The emergency-stop control line (drive-source cutoff control line) consists entirely of hard wires. When an emergency-stop operation is performed, the controller will execute a stop action of category 1. Specifically, it will stop the actuator at the deceleration for emergency stop as specified by a parameter, and turn off the servo. At this time, the drive source will also be cut off inside the standard controller. With the global controller, the drive source must be cut off externally to the controller.

   As for recovery from an emergency-stop state (including recovery of the drive source), an automatic reset using the emergency-stop switch or a method requiring both an emergency-stop switch action and an external input signal can be selected by a parameter (I/O parameter No. 44).

   During an emergency stop, the status can be output to an external device (set by I/O parameter No. 48).

2. Overview of enabling action
   Enabling operation (via the safety gate or the deadman switch on the teaching pendant) implements an action similar to the emergency-stop action, except that an emergency-stop status is not output.

3. Controller operation modes and safety switches on the teaching pendant
   The deadman switch on the teaching pendant is enabled only when the controller is in the MANU mode. The emergency-stop switch on the teaching pendant is always enabled as long as the teaching pendant is connected to the controller.

4. Connecting a teaching pendant while the controller is operating in the AUTO mode
   Connecting a teaching pendant to the controller or removing the connected teaching pendant while the controller is operating in the AUTO mode may trigger an emergency stop. Do not connect/remove a teaching pendant while the controller is operating in the AUTO mode.

5. Applying voltage to the system I/Os
   The safety circuit of the X-SEL controller is designed to operate with 24 VDC. Therefore, never apply 100 or 200 VAC to the system I/Os. Doing so may damage the internal circuits of the controller.

   The following pages explain the safety circuit of each controller specification in details.

2. Safety Circuit for P Type (Standard Specification) Controller

The P type controller has a built-in drive-source cutoff circuit just like IAI's other controllers.
The drive-source cutoff circuit consists of a relay and conforms to safety category B. If your equipment must meet a higher safety category, use the Q type (global specification) controller explained later.
The standard controller has a built-in drive-source cutoff circuit. Connect the control power supply and motor power supply to the same power source and also turn on/off the control power supply and motor power supply at the same time.
The teaching port can be connected to either an IAI's standard teaching pendant or ANSI teaching pendant. Note, however, that redundant safety circuits cannot be configured even if an ANSI teaching pendant is used.
Set the teaching-pendant type switch located above the teaching connector to the position appropriate for the teaching pendant used. Set the switch to the left for an ANSI teaching pendant, or to the right for IAI's standard teaching pendant.

Note: If the teaching-pendant type switch is not set properly, the safety gate switch will not function.
The emergency-stop line and enabling line are driven by the controller's internal power supply. It should be noted that the safety circuit cannot be driven by an external power source.
Do not use the internal power supply provided for the system I/O connector, for any other purpose. It may damage the equipment or cause it to malfunction.

The tables below list the signals and wiring methods of the safety-circuit interface connector.

System I/O Connector for P Type

Item	Overview	Details
Connector	COMBICON (2-row, 9-pin)	MCD1.5/9-G1-3.5P26THR (by Phoenix Contact)
	Cable-end connector	FMC1.5/9-ST-3.5
	Applicable wire size	AWG24 ~ 16

Terminal Assignments

	Pin No.	Signal name	Overview		Details
Left	9	DET	IN	Not connected	Not used
	8	EMGin	IN	To external EMG	Emergency-stop detection input
	7		+24V	Shorted Wired before shipment	24-V power output for emergency-stop detection input
	6	EMG1	line+		Emergency-stop switch 1 Wire circuit 1 connected to EMG of the TP
	5		line-	To external EMG	
	4	EMG2	line+	Not connected	Not used
	3		line-	Not connected	
	2	SDN	Out+	Not connected	External relay drive cutoff contact outputs
	1		Out-	Not connected	
Right	18	DET	+24V	Not connected	Not used
	17	ENBin	IN	To external ENB	Enable detection input
	16		+24V	Shorted Wired before shipment	24-V power output for enable detection input
	15	ENB1	line+		Enable switch 1 (safety gate, etc.) Wire circuit 1 connected to ENB of the TP
	14		line-	To external ENB	
	13	ENB2	line+	Not connected	Not used
	12		line-	Not connected	
	11	RDY	Out+	May be used if necessary	Ready signal contact outputs (dry contacts) (for inductive load of up to 400 mA)
	10		Out-		

With the P type, use only the signals shown in the shaded fields of the table for connection with the safety switches.

Exercise caution that opening the specified pins or wiring them differently may compromise the safety actions of the controller.

The RDYOUT contacts will close only when the controller has started properly. By connecting these contacts in series with similar contacts of other equipment, the soundness of the entire system can be checked easily.

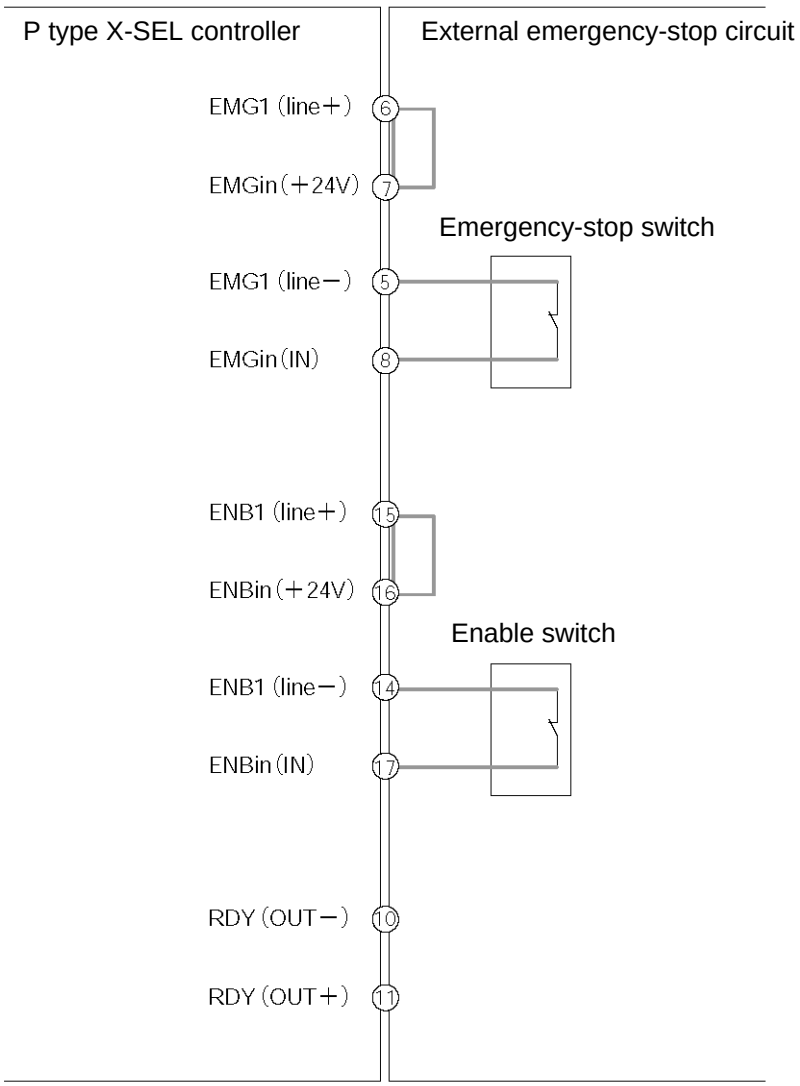

3. Safety Circuit for Q Type (Global Specification) Controller

The global controller has no internal drive-source cutoff circuit so that the user can configure a desired drive-source cutoff circuit externally to the controller to conform to the required safety category.
The safety circuit consists of two circuits: the emergency-stop (EMG) circuit and enable (ENB) circuit. Each circuit adopts a redundant design, so a safety circuit conforming to a higher safety category of up to level 4 can be configured using an external drive-source cutoff circuit.
Since this controller has no built-in drive-source cutoff circuit, be sure to install a drive-source cutoff circuit in the motor power circuit. It is recommended that the control power supply be wired from the same power source as the motor power supply at a point before the drive-source cutoff part is connected.
Please note that IAI is not liable for any losses arising from a malfunction of the safety circuit configured by the user.
The ANSI safety standards can be met only when an ANSI teaching pendant is connected to the teaching port.
The redundant emergency-stop lines and enabling lines are designed with the assumption that they will be driven by a power source external to the controller. Note, however, that the inputs to the contacts that instruct emergency-stop action and enabling action operate on the internal power supply. Bear this in mind and wire these contacts properly.
Do not use the internal power supply provided for the system I/O connector, for any other purpose. It may damage the equipment or cause it to malfunction.

The tables below list the signals and wiring methods of the safety-circuit interface connector. The connector pin assignments and internal circuit components are the same as those of the standard specification.

System I/O Connector for Q type

Item	Overview	Details
Connector	COMBICON (2-row, 9-pin)	MCD1.5/9-G1-3.5P26THR (by Phoenix Contact)
	Cable-end connector	FMC1.5/9-ST-3.5
	Applicable wire size	AWG24 ~ 16

Terminal Assignments

	Pin No.	Signal name	Overview		Details
Left	9	DET	IN	To fused-contact detection circuit	External contact error input (paired with No. 18) Connected to the fused-contact detection contacts of the safety circuit.
	8	EMGin	IN	To EMG status of safety circuit	Emergency-stop detection input
	7		+24V		24-V power output for emergency-stop detection input
	6	EMG1	line+	To EMG switch circuit 1	Emergency-stop switch 1 Wire circuit 1 connected to EMG of the TP
	5		line-		
	4	EMG2	line+	To EMG switch circuit 2	Emergency-stop switch 2 Wire circuit 2 connected to EMG of the TP
	3		line-		
	2	SDN	Out+	To interlock of safety circuit	External relay drive cutoff contact output Signal for requesting the controller to cutoff the drive source
	1		Out-		
Right	18	DET	+24V	To fused-contact detection circuit	24-V power output for external contact error input Connected to the fused-contact detection contacts of the safety circuit.
	17	ENBin	IN	To EMB status of safety circuit	Enable detection input
	16		+24V		24-V power output for enable detection input
	15	ENB1	line+	To enable circuit 1	Enable switch 1 (safety gate, etc.) Wire circuit 1 connected to ENB of the TP
	14		line-		
	13	ENB2	line+	To enable circuit 2	Enable switch 2 Wire circuit 2 connected to ENB of the TP
	12		line-		
	11	RDY	Out+	May be used if necessary	Ready signal contact outputs (dry contacts) (for inductive load of up to 400 mA)
	10		Out-		

In the table, the signals shown in ▭ fields (EMGin, EMG1, SDN, ENBin, ENB1) must always be connected regardless of the required safety category. If these signals are connected wrongly or not connected, the safety functions will be compromised.

In the table, the signals shown in ▭ fields (EMG2, ENB2) must be connected to meet safety category 3 or above. They are designed to provide redundant safety circuits.

In the table, the signal shown in ▭ fields (DET) provides an input for detecting malfunction of the safety circuit (mainly fused relay contacts). Be sure to use this signal if you want the X-SEL controller to detect fused contacts. If the safety circuit is configured as a closed system to manage fused contacts and other problems independently, safety category 4 can be met without connecting this signal to the controller.

- DET
  DET (IN) and DET (+24V) are dry contact input terminals consisting of a photocoupler. By inputting fused-contact detection signals from the drive-source cutoff safety circuit, the controller will be able to detect problems in the external safety circuit.

- SDN
  SDN (OUT+) and SDN (OUT-) are output contacts that remain open while the controller is prohibiting the motor power supply from the external power source. This condition will occur immediately after the controller power is turned on, when an error occurs in the equipment, or when a drive-source cutoff cancellation command is not received by the EMG or ENB line. Configure the circuit in such a way that the drive source will never be turned on when these contacts are open.
  When turning on the power, turn on the control power first, confirm that these contacts are closed, and then turn on the drive power. (If the control power and drive power are turned on simultaneously, an “E6D, Drive-source cutoff relay error” may generate.)

- EM1/EMG2, ENB1/ENB2
  EMG1 (line+)/(line-) and EMG2 (line+)/(line-) are redundant emergency-stop control lines.
  ENB1 (line+)/(line-) and ENB2 (line+)/(line-) are redundant enabling control lines.
  Use these lines to cut off the external drive source. Since they are completely dry signal lines, configure a relay circuit using an external power source.

- EMGin, ENBin
  EMGin (IN) and EMGin (+24V) are contact inputs that notify the controller of the drive-source cutoff input received by the drive-source cutoff circuit via an EMG signal.
  ENBin (IN) and ENBin (+24V) are contact inputs that notify the controller of the drive-source cutoff input received by the drive-source cutoff circuit via an ENB signal.
  These contact signals are used to decelerate the actuator to a stop or turn off the servo. Normally, a safety relay output is connected to each of these inputs.

- RDY
  RDY (OUT+) and RDY (OUT-) are output contacts that will close only when the controller has started properly. By connecting these contacts in series with similar contacts of other equipment, the soundness of the entire system can be checked easily.

Q Type X-SEL Controller

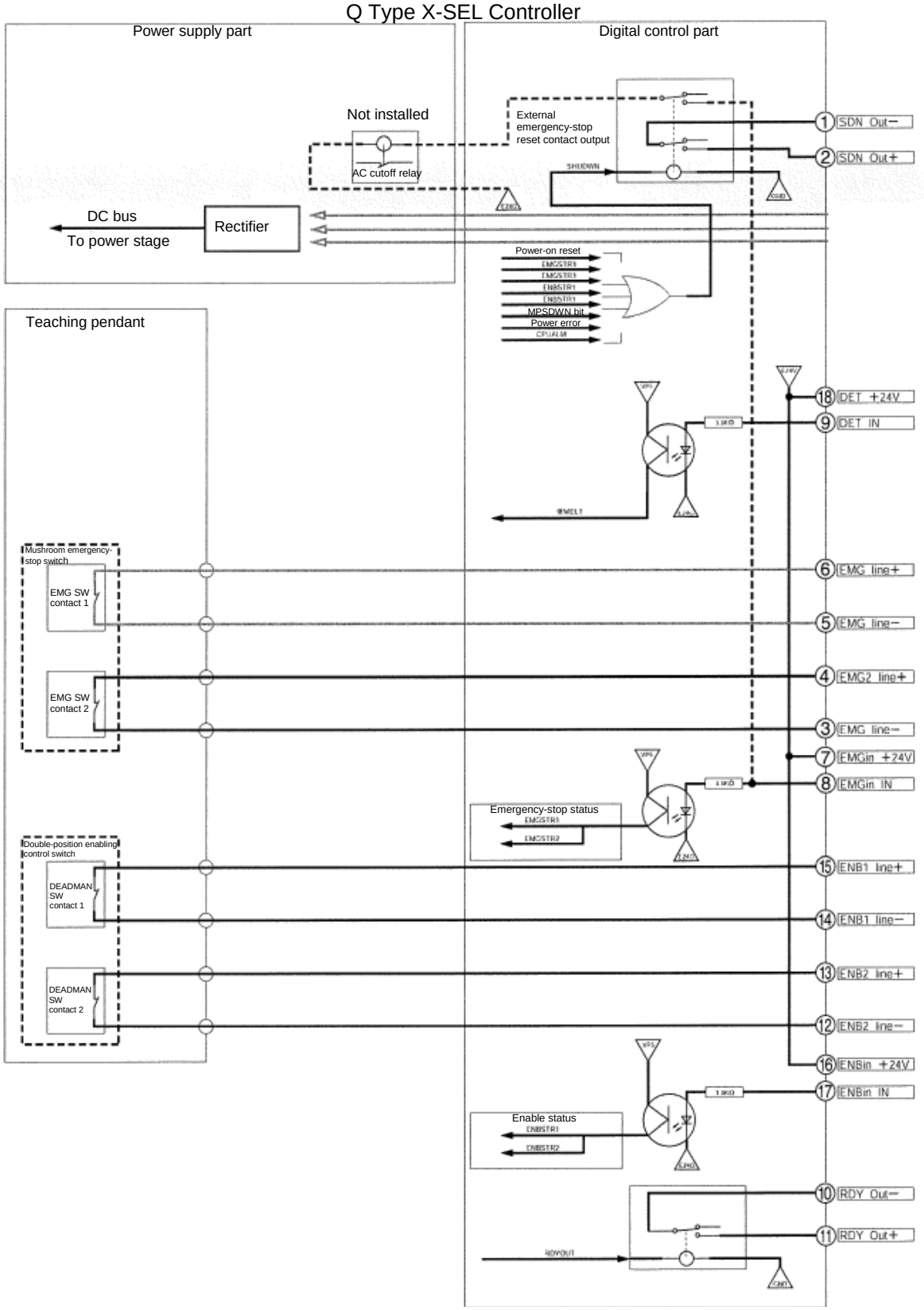

External Emergency-Stop Circuit

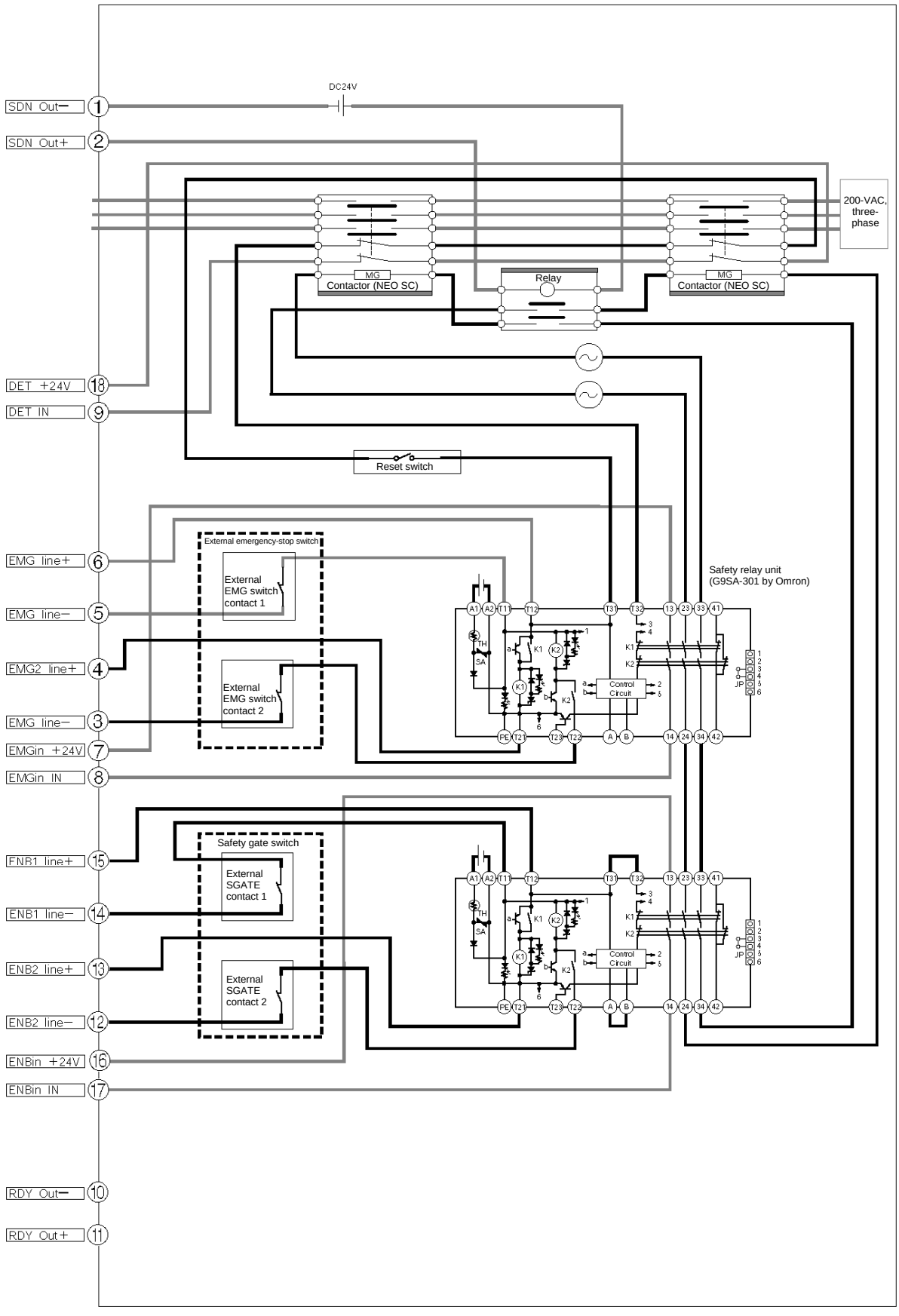

Chapter 7 System Setup

A connection example of a 2-axis controller is given below:

1. Connection Method of Controller and Actuator

In the case of an absolute specification, perform an absolute reset after the connection (refer to Chapter 8).

1.1 Connection Diagram for P Type (Standard Specification)

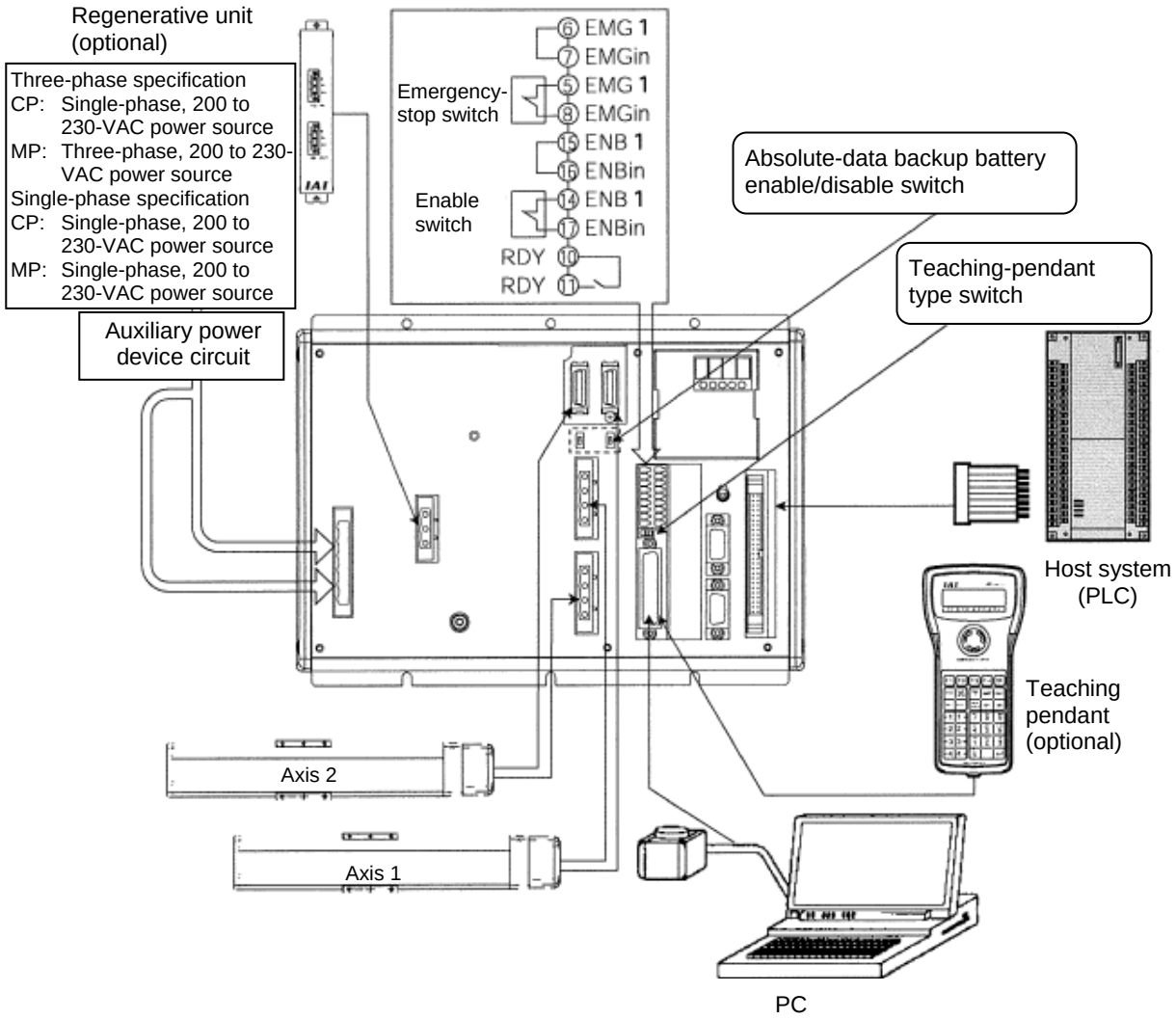

Note 1:	With the absolute specification, set the absolute-data backup battery enable/disable switch to the bottom position for all axes before connecting the encoder/axis-sensor cables. (After the cables have been connected and power turned on, set the switch back to the top position.)
Note 2:	When connecting a teaching pendant or PC cable (PC software), set the teaching-pendant type switch to an appropriate position. Left: ANSI teaching pendant or PC cable (conforming to safety category 4) Right: IAI's standard teaching pendant or PC cable

1.2 Connection Diagram for Q Type (Global Specification)

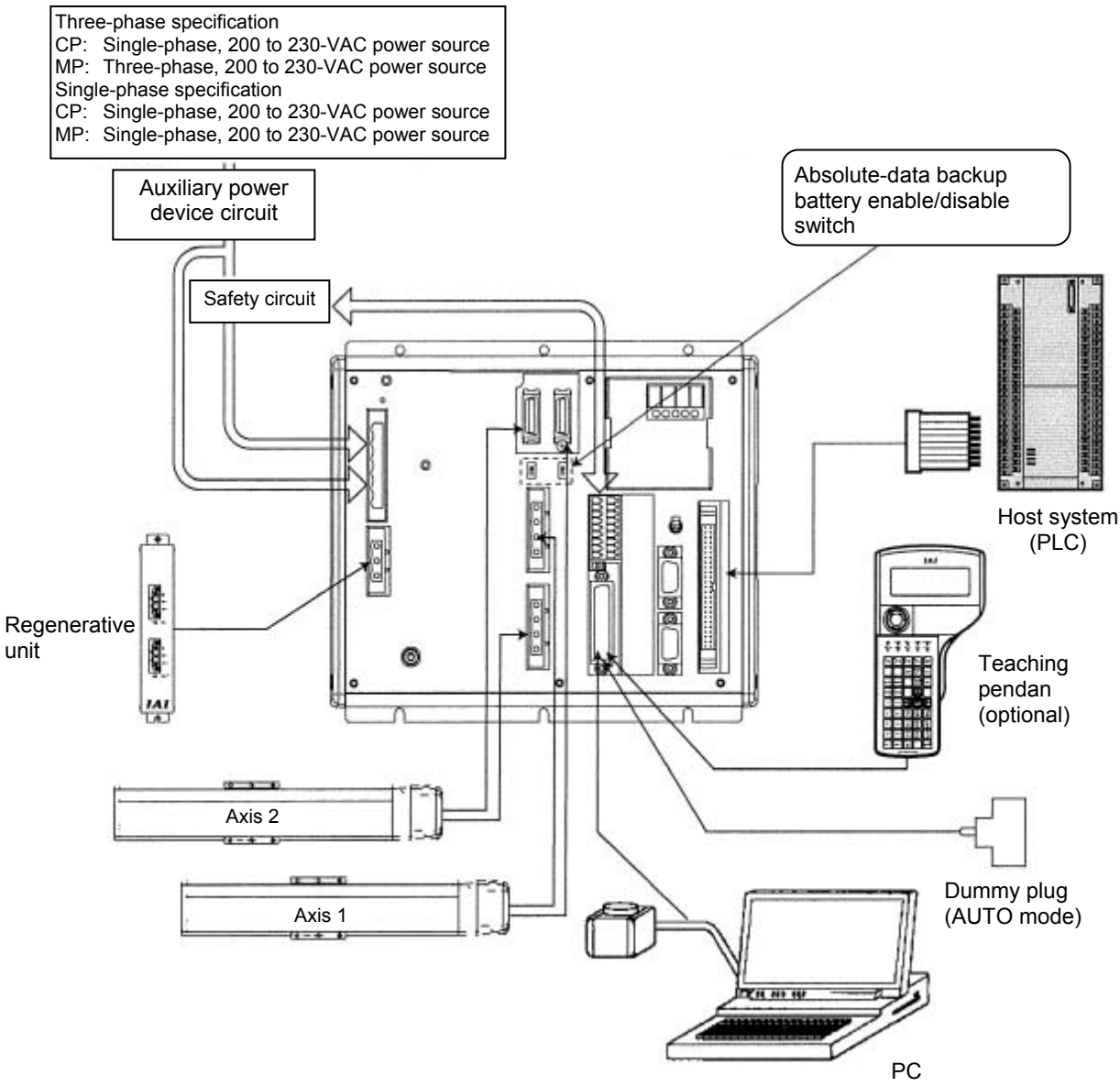

Note 1: With the absolute specification, set the absolute-data backup battery enable/disable switch to the bottom position for all axes before connecting the encoder/axis-sensor cables. (After the cables have been connected and power turned on, set the switch back to the top position.)

Note 2: Connect the supplied dummy plug to the teaching connector if neither a teaching pendant nor PC cable (PC software) is connected to this connector.

1.3 Startup procedure

Note:	When installing multiple axes to the controller, be sure to connect the actuator cables to the right connectors. Check the type of the actuator connected to each connector. If the cables and connectors are not connected properly, motor/board damage or malfunction may result.

1. If your controller is of the absolute specification, set the absolute-data backup battery enable/disable switch to the bottom position for all axes.
2. Connect to the controller the motor cable, encoder cable and LS cables (optional) from the actuator. Before turning on the power, be sure to confirm that each connector on the controller is connected to the correct actuator.

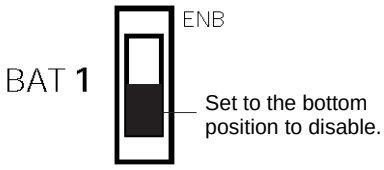

3. Connect the teaching pendant cable to the teaching connector. Once the teaching pendant has been connected, set the mode switch to MANU (top position).
   (If the mode switch is set to AUTO, the teaching pendant and RS-232 communication function will not operate after the power is turned on.) (P type only)
4. Set the teaching-pendant type switch.
   (Note 1) Q type controllers have no TP-SW.
   (Note 2) Q type controllers cannot be used with IAI's standard teaching pendants or standard PC cables.
   Left: ANSI teaching pendant or PC cable (conforming to safety category 4)
   Right: IAI's standard teaching pendant or PC cable

5. Turn on the controller power.
6. If your controller is of the absolute specification, set the absolute-data backup battery enable/disable switch to the top position (ENB) for all axes.
7. The panel window will show the code "rdy," indicating that the controller is ready. If "ErG" is shown on the panel window, it means an emergency stop signal has been input. Reset the emergency stop.
   If your controller is of the absolute specification, "ECA1" or "ECA2" will be shown. Refer to Chapter 8, "How to Perform An Absolute Encoder Reset."

The controller is now ready to operate.

- The RDY terminals (10, 11) in the system I/O connector are relay contact terminals that are shorted when the controller is ready.

2. I/O Connection Diagram

2.1 NPN specification

Pin No.	Category	Port No.	Function
1	Input	-	+24-V input
2		000	Program start
3		001	General-purpose input
4		002	General-purpose input
5		003	General-purpose input
6		004	General-purpose input
7		005	General-purpose input
8		006	General-purpose input
9		007	Program specification (PRG No. 1)
10		008	Program specification (PRG No. 2)
11		009	Program specification (PRG No. 4)
12		010	Program specification (PRG No. 8)
13		011	Program specification (PRG No. 10)
14		012	Program specification (PRG No. 20)
15		013	Program specification (PRG No. 40)
16		014	General-purpose input
17		015	General-purpose input
18		016	General-purpose input
19		017	General-purpose input
20		018	General-purpose input
21		019	General-purpose input
22		020	General-purpose input
23		021	General-purpose input
24		022	General-purpose input
25		023	General-purpose input
26		024	General-purpose input
27		025	General-purpose input
28		026	General-purpose input
29		027	General-purpose input
30		028	General-purpose input
31		029	General-purpose input
32		030	General-purpose input
33		031	General-purpose input
34	Output	300	Alarm output
35		301	Ready output
36		302	Emergency-stop output
37		303	General-purpose output
38		304	General-purpose output
39		305	General-purpose output
40		306	General-purpose output
41		307	General-purpose output
42		308	General-purpose output
43		309	General-purpose output
44		310	General-purpose output
45		311	General-purpose output
46		312	General-purpose output
47		313	General-purpose output
48		314	General-purpose output
49		315	General-purpose output
50		-	0 V

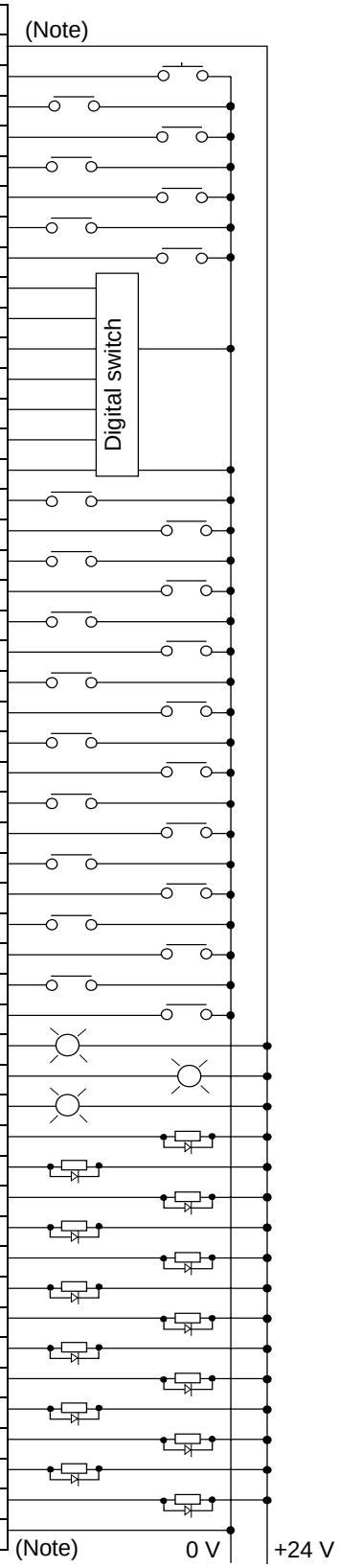

Connect +24 V to pin No. 1 and 0 V to pin No. 50.

2.2 PNP specification

Pin No.	Category	Port No.	Function
1	Input	-	+24-V input
2		000	Program start
3		001	General-purpose input
4		002	General-purpose input
5		003	General-purpose input
6		004	General-purpose input
7		005	General-purpose input
8		006	General-purpose input
9		007	Program specification (PRG No. 1)
10		008	Program specification (PRG No. 2)
11		009	Program specification (PRG No. 4)
12		010	Program specification (PRG No. 8)
13		011	Program specification (PRG No. 10)
14		012	Program specification (PRG No. 20)
15		013	Program specification (PRG No. 40)
16		014	General-purpose input
17		015	General-purpose input
18		016	General-purpose input
19		017	General-purpose input
20		018	General-purpose input
21		019	General-purpose input
22		020	General-purpose input
23		021	General-purpose input
24		022	General-purpose input
25		023	General-purpose input
26		024	General-purpose input
27		025	General-purpose input
28		026	General-purpose input
29		027	General-purpose input
30		028	General-purpose input
31		029	General-purpose input
32		030	General-purpose input
33		031	General-purpose input
34	Output	300	Alarm output
35		301	Ready output
36		302	Emergency-stop output
37		303	General-purpose output
38		304	General-purpose output
39		305	General-purpose output
40		306	General-purpose output
41		307	General-purpose output
42		308	General-purpose output
43		309	General-purpose output
44		310	General-purpose output
45		311	General-purpose output
46		312	General-purpose output
47		313	General-purpose output
48		314	General-purpose output
49		315	General-purpose output
50		-	0 V

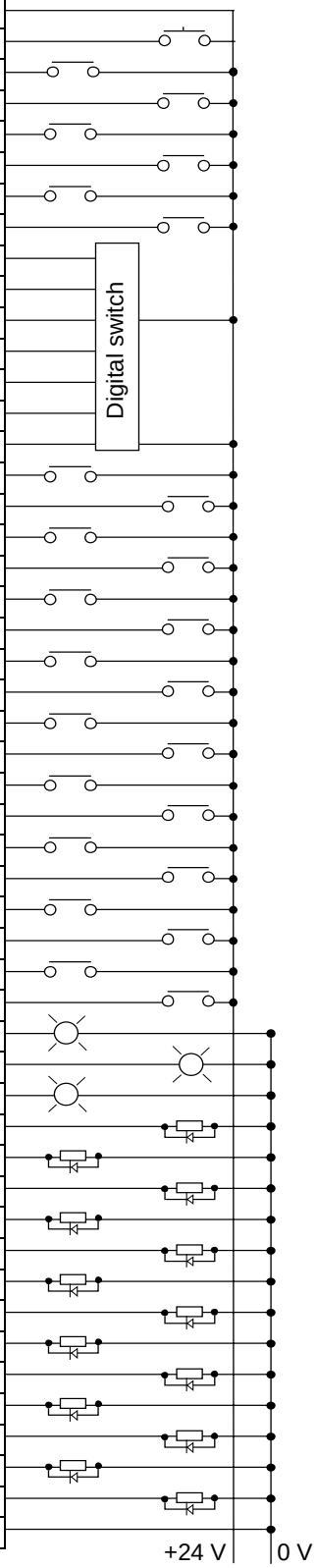

Connect +24 V to pin No. 1 and 0 V to pin No. 50.

2.3 I/O Flat Cable

Flat cable: KFX-50 (S) (Color) (Kaneko Cord)

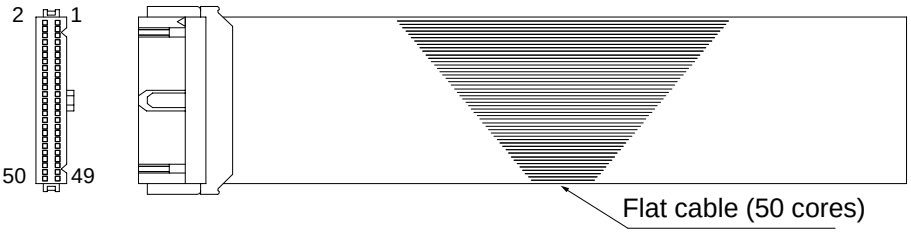

Socket (with strain relief): XG4M-5030-T (Omron)

No.	Color	No.	Color	No.	Color	No.	Color	No.	Color
1	Brown-1	11	Brown-2	21	Brown-3	31	Brown-4	41	Brown-5
2	Red-1	12	Red-2	22	Red-3	32	Red-4	42	Red-5
3	Orange-1	13	Orange-2	23	Orange-3	33	Orange-4	43	Orange-5
4	Yellow-1	14	Yellow-2	24	Yellow-3	34	Yellow-4	44	Yellow-5
5	Green-1	15	Green-2	25	Green-3	35	Green-4	45	Green-5
6	Blue-1	16	Blue-2	26	Blue-3	36	Blue-4	46	Blue-5
7	Purple-1	17	Purple-2	27	Purple-3	37	Purple-4	47	Purple-5
8	Gray-1	18	Gray-2	28	Gray-3	38	Gray-4	48	Gray-5
9	White-1	19	White-2	29	White-3	39	White-4	49	White-5
10	Black-1	20	Black-2	30	Black-3	40	Black-4	50	Black-5

3. Multi-point DIO Board

This board is a multi-point DIO board equipped with 48 input points and 48 output points for use with XSEL controllers.

3.1 Overview

3.1.1 Features

[1] One board provides a total of 96 input/output points.
Multiple inputs/outputs of your XSEL controller can be controlled with a single board offering 48 input points and 48 output points.

[2] Supporting DIO interfaces of PNP and NPN types
Just like you can with current IO boards, you can also select a desired DIO interface of one of two types, NPN and PNP, for this board.

[3] Overcurrent & I/O power-supply monitoring function
An overcurrent flowing through the DO board is detected. The I/O power-supply voltage is also monitored and if the monitored voltage deviates from the specified range, the DO outputs will be cut off. Take note, however, that unlike with current IO boards, this board detects overcurrent based on a threshold of 400 mA per 24 points (current IO boards: 400 mA per 8 points).

3.1.2 Board Variations

This board is available in the variations shown in the table below.

Model	
IA-IO-3204-NP	XSEL multi-point IO board of general-purpose, large-capacity type (NPN specification)
IA-IO-3204-NP	XSEL multi-point IO board of general-purpose, large-capacity type (PNP specification)

3.2 Configuration

3.2.1 System Configuration

This board is installed in the standard I/O slot or any expansion slot and exchanges signals with external DIOs.

Example of connection

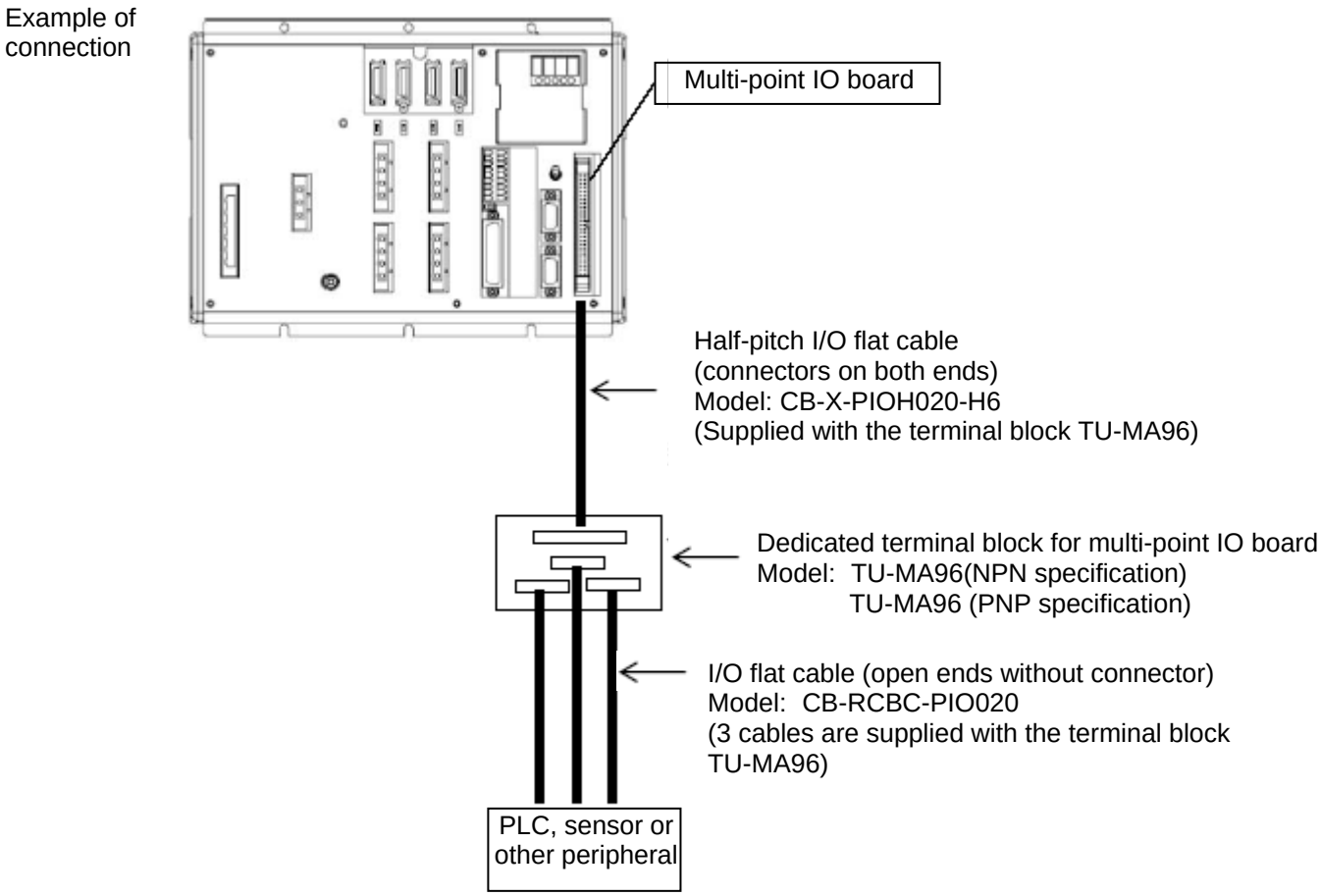

3.3 Specifications

3.3.1 Input/Output Specifications

Item	Specification
Numbers of input/output points	48 input points, 48 output points
External power-supply voltage	DC24V ± 10%
Input insulation	Photocoupler insulation
Input current	7 mA max. per point
Input leak current	1 mA max. per point
Output insulation	Photocoupler insulation
Output element	Transistor
Maximum output load current	50 mA per point (400 mA per 24 points)
Output leak current	0.1 mA max. per point

3.4 External Interface Specifications

3.4.1 Terminal Assignment for External DIO Interface

Overview of multi-point DIO interface specifications

Item	Overview	Remarks
Applicable connector	Half-pitch flat connector, 100 pins	HIF6-100PA-1.27DS (Hirose)
Connector name	External DIO connector	
External power supply	DC24V ± 10%	The power line is divided into two circuits, each supplying power to a group of 24 DI points and 24 DO points.
DI	48 points	
DO	48 points	

Pin layout (Connector engagement surface)

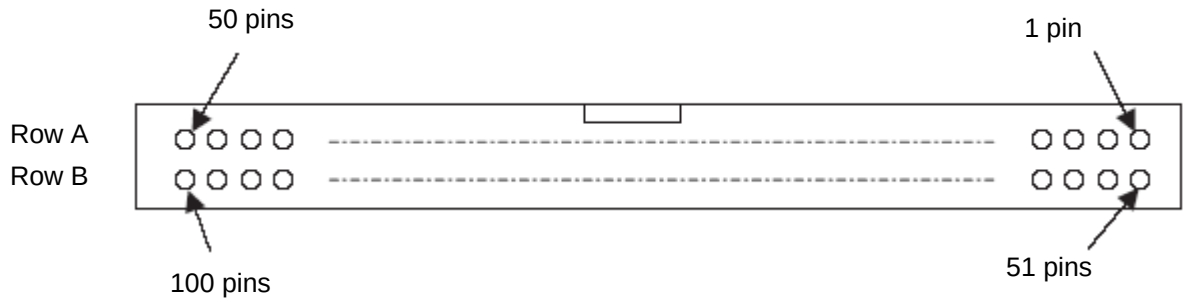

3.4.2 24-V I/O Power input

The power-supply circuit for IN000 to 023 and OUT300 to 323 is separated from the power-supply circuit for IN024 to 047 and OUT324 to 347. Connect an external power supply to each of the power-supply terminals corresponding to these circuits.
This board also provides the following error detection functions in connection with I/O power:
1. Monitoring of external I/O power-supply voltage (+24 V)
2. Monitoring of output current for each group of 24 points

3.5 Connection Cables for Multi-point IO Board

Cable 1					Cable 2				
Category	Pin No.	Color	Port No.	Function	Category	Pin No.	Color	Port No.	Function
-	1	Brown-1	-	External power supply 24 VDC for pin Nos. 2 to 25/51 to 74	Output	51	Brown-1	300	Alarm output
Input	2	Red-1	000	Program start		52	Red-1	301	Ready output
	3	Orange-1	001	General pursose input		53	Orange-1	302	Emergency stop output
	4	Yellow-1	002	General pursose input		54	Yellow-1	303	General purpose output
	5	Green-1	003	General pursose input		55	Green-1	304	General purpose output
	6	Blue-1	004	General pursose input		56	Blue-1	305	General purpose output
	7	Purple-1	005	General pursose input		57	Purple-1	306	General purpose output
	8	Grey-1	006	General pursose input		58	Grey-1	307	General purpose output
	9	White-1	007	Program specification (PRG No.1)		59	White-1	308	General purpose output
	10	Black-1	008	Program specification (PRG No.2)		60	Black-1	309	General purpose output
	11	Brown-2	009	Program specification (PRG No.4)		61	Brown-2	310	General purpose output
	12	Red-2	010	Program specification (PRG No.8)		62	Red-2	311	General purpose output
	13	Orange-2	011	Program specification (PRG No.10)		63	Orange-2	312	General purpose output
	14	Yellow-2	012	Program specification (PRG No.20)		64	Yellow-2	313	General purpose output
	15	Green-2	013	Program specification (PRG No.40)		65	Green-2	314	General purpose output
	16	Blue-2	014	General pursose input		66	Blue-2	315	General purpose output
	17	Purple-2	015	General pursose input		67	Purple-2	316	General purpose output
	18	Grey-2	016	General pursose input		68	Grey-2	317	General purpose output
	19	White-2	017	General pursose input		69	White-2	318	General purpose output
	20	Black-2	018	General pursose input		70	Black-2	319	General purpose output
	21	Brown-3	019	General pursose input		71	Brown-3	320	General purpose output
	22	Red-3	020	General pursose input		72	Red-3	321	General purpose output
	23	Orange-3	021	General pursose input		73	Orange-3	322	General purpose output
	24	Yellow-3	022	General pursose input		74	Yellow-3	323	General purpose output
	25	Green-3	023	General pursose input	-	75	Green-3	-	External power supply 0 V for pin Nos. 2 to 25/51 to 74
-	26	Blue-3	-	External power supply 24 VDC for pin Nos. 27 to 50/76 to 99	Output	76	Blue-3	324	General purpose output
Input	27	Purple-3	024	General pursose input		77	Purple-3	325	General purpose output
	28	Grey-3	025	General pursose input		78	Grey-3	326	General purpose output
	29	White-3	026	General pursose input		79	White-3	327	General purpose output
	30	Black-3	027	General pursose input		80	Black-3	328	General purpose output
	31	Brown-4	028	General pursose input		81	Brown-4	329	General purpose output
	32	Red-4	029	General pursose input		82	Red-4	330	General purpose output
	33	Orange-4	030	General pursose input		83	Orange-4	331	General purpose output
	34	Yellow-4	031	General pursose input		84	Yellow-4	332	General purpose output
	35	Green-4	032	General pursose input		85	Green-4	333	General purpose output
	36	Blue-4	033	General pursose input		86	Blue-4	334	General purpose output
	37	Purple-4	034	General pursose input		87	Purple-4	335	General purpose output
	38	Grey-4	035	General pursose input		88	Grey-4	336	General purpose output
	39	White-4	036	General pursose input		89	White-4	337	General purpose output
	40	Black-4	037	General pursose input		90	Black-4	338	General purpose output
	41	Brown-5	038	General pursose input		91	Brown-5	339	General purpose output
	42	Red-5	039	General pursose input		92	Red-5	340	General purpose output
	43	Orange-5	040	General pursose input		93	Orange-5	341	General purpose output
	44	Yellow-5	041	General pursose input		94	Yellow-5	342	General purpose output
	45	Green-5	042	General pursose input		95	Green-5	343	General purpose output
	46	Blue-5	043	General pursose input		96	Blue-5	344	General purpose output
	47	Purple-5	044	General pursose input		97	Purple-5	345	General purpose output
	48	Grey-5	045	General pursose input		98	Grey-5	346	General purpose output
	49	White-5	046	General pursose input		99	White-5	347	General purpose output
	50	Black-5	047	General pursose input	-	100	Black-5	-	External power supply 0 V for pin Nos. 27 to 50/76 to 99

3.6 Connection Cables for Multi-point IO Board

Model: CB-X-PIOH020

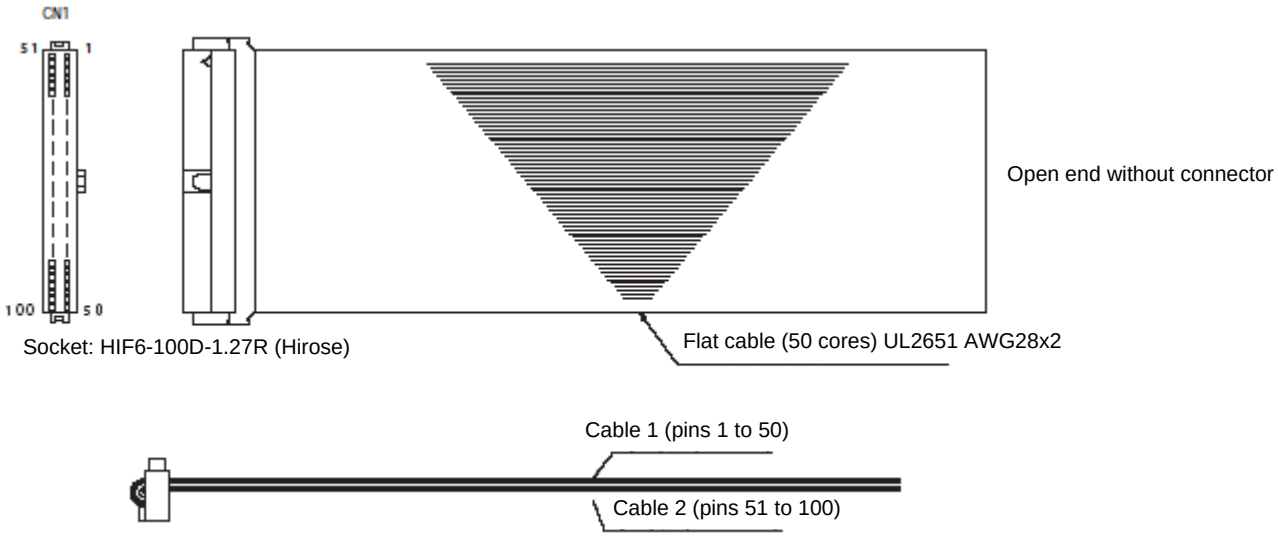

• Cable with connectors on both ends Model: CB-X-PIOH020-H6
This connector is used to connect the multi-point DIO board and an optional terminal block unit.

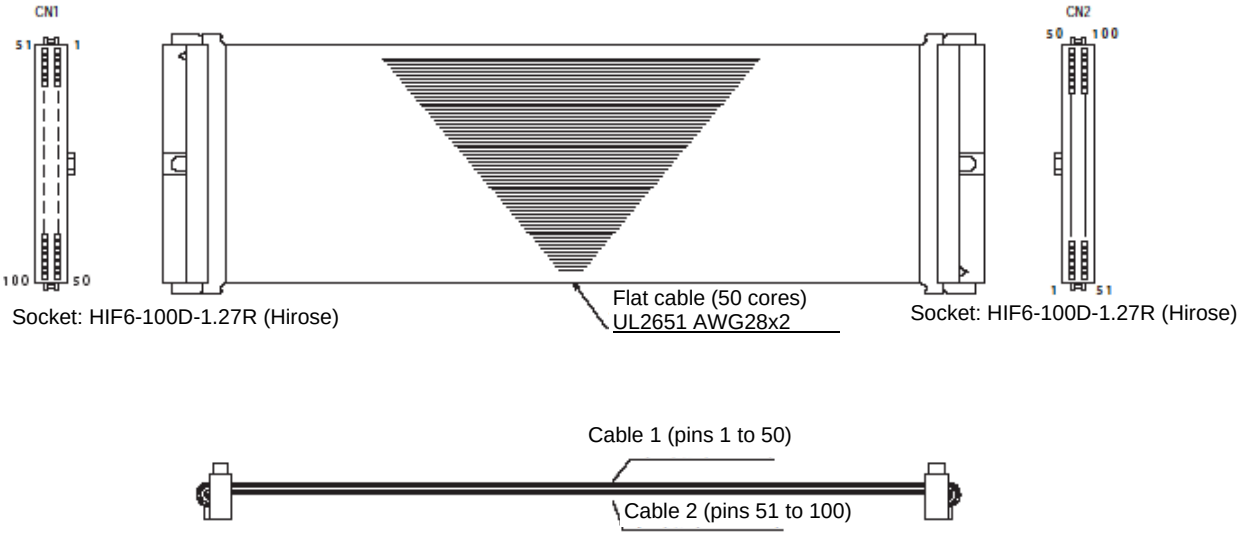

3.7 Input/Output Circuits

3.7.1 Input

Input specifications

Item	Specification (Common to PNP/NPN specifications)
External power-supply voltage	DC24V ± 10%
Input current	7 mA max. per point
Leak current	1 mA max. per point

Input circuit

• NPN specification

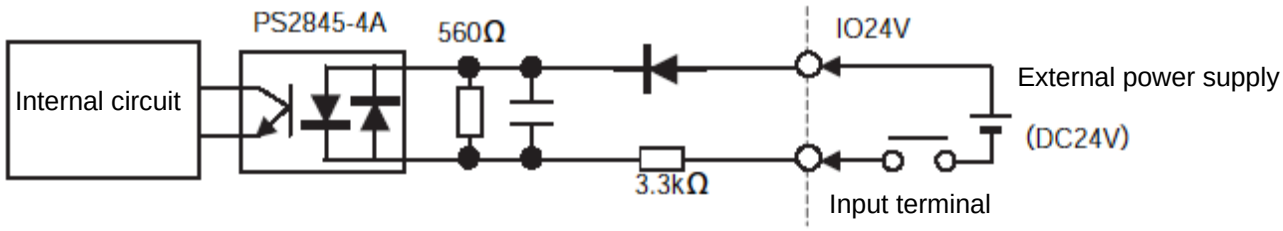

• PNP specification

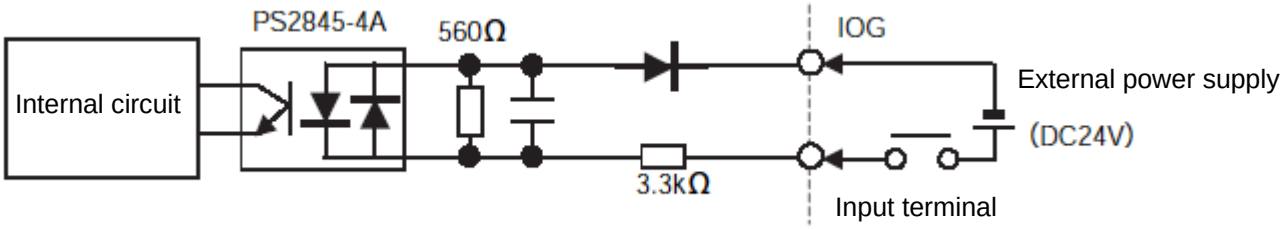

3.7.2 Output

Output specifications

Item	Specification
Output element	Transistor array NPN specification: TD62084AF by Toshiba Corporation PNP specification: TD62784AF by Toshiba Corporation
External power-supply voltage	DC24 ± 10%
Maximum load current	50 mA max. per point (400 mA max. per 24 points): *1
Leak current	0.1 mA max. per point

*1: 400 mA represents the total output current for each group of 24 points.

- NPN specification

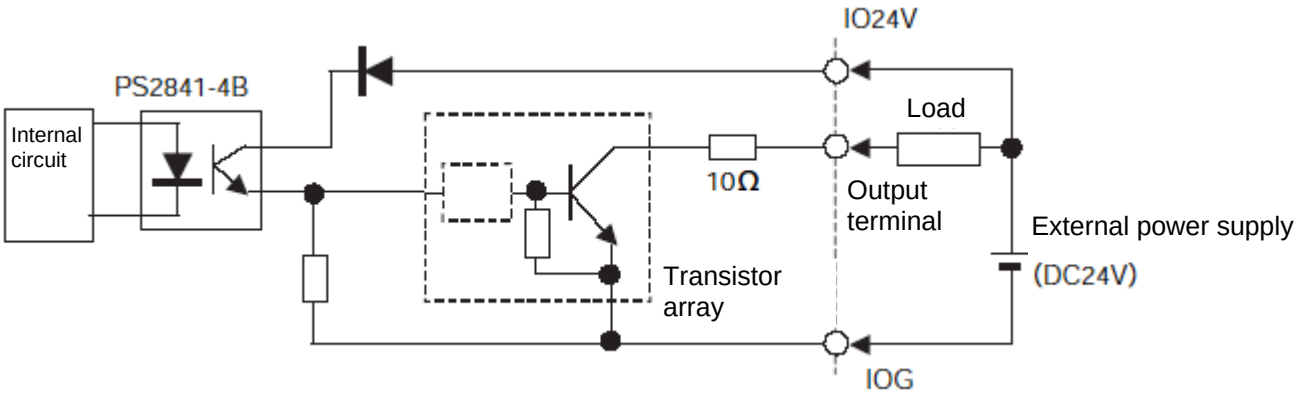

- PNP specification

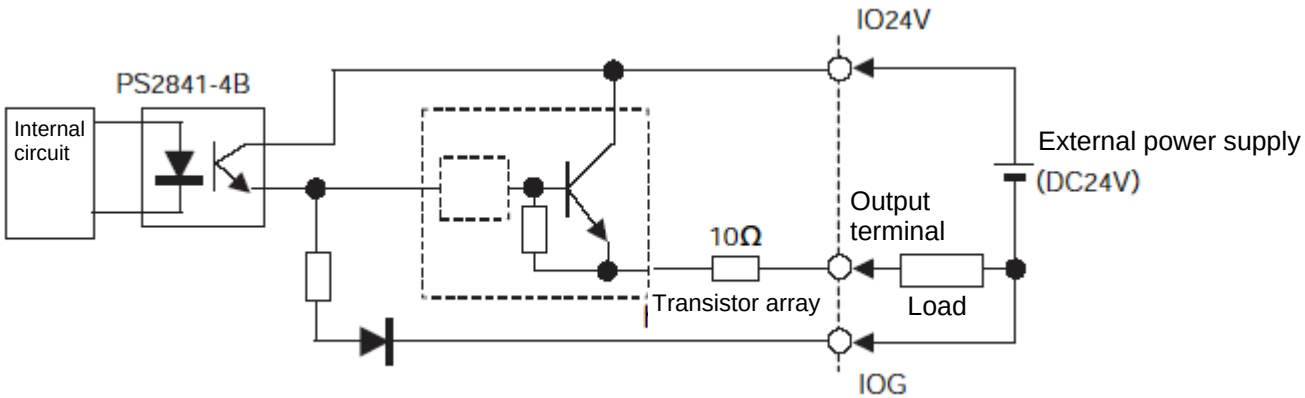

Chapter 8 How to Perform An Absolute Encoder Reset (Absolute Specification)

When the absolute-encoder battery voltage of the X-SEL Controller is abnormal or when the battery or encoder cable is disconnected, an encoder battery error will occur and an absolute encoder reset must be performed.

This chapter explains how to perform an absolute encoder reset using the PC software. For the absolute-encoder reset method using the teaching pendant, refer to the operation manual for the teaching pendant.

In the case of a synchro controller, refer to "◎ Absolute Reset of A Synchro Controller" in Appendix.

1. Preparation

(1) PC
A PC in which IAI's X-SEL PC software (X_SEL.exe) has been installed

(2) Connection cable (the cable supplied with the PC software)
RS232C cross cable (PC-end: female 9-pin, Controller-end: male 25-pin)

(3) All adjustments other than the absolute reset must have been completed.

2. Procedure

(1) Turn off the X-SEL Controller power. Turn on the PC power and wait for the operating system to be started.

(2) Connect the 9-pin, D-sub connector on one end of the connection cable to the communication port on the PC, and connect the 25-pin, D-sub connector on the other end to the 25-pin communication port on the controller.

(3) Turn on the controller power. If an encoder battery error is present but no other adjustments are pending, the 7-segment LED display will show "E914" or "ECA2" indicating that the controller has detected an encoder battery error.

(4) Start the X-SEL PC software (X_SEL.exe) on the PC. The following explains the operation steps in the X-SEL PC software.

(5) When the [Connection Confirmation] dialog box is displayed, select the port name you are using on the PC. Click the [OK] button.
(The software will automatically detect the baud rate.)

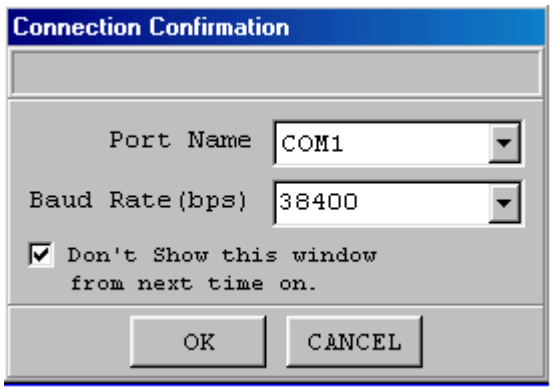

(6) The X-SEL PC software window will be displayed. Clicking the [OK] button will clear the error message.

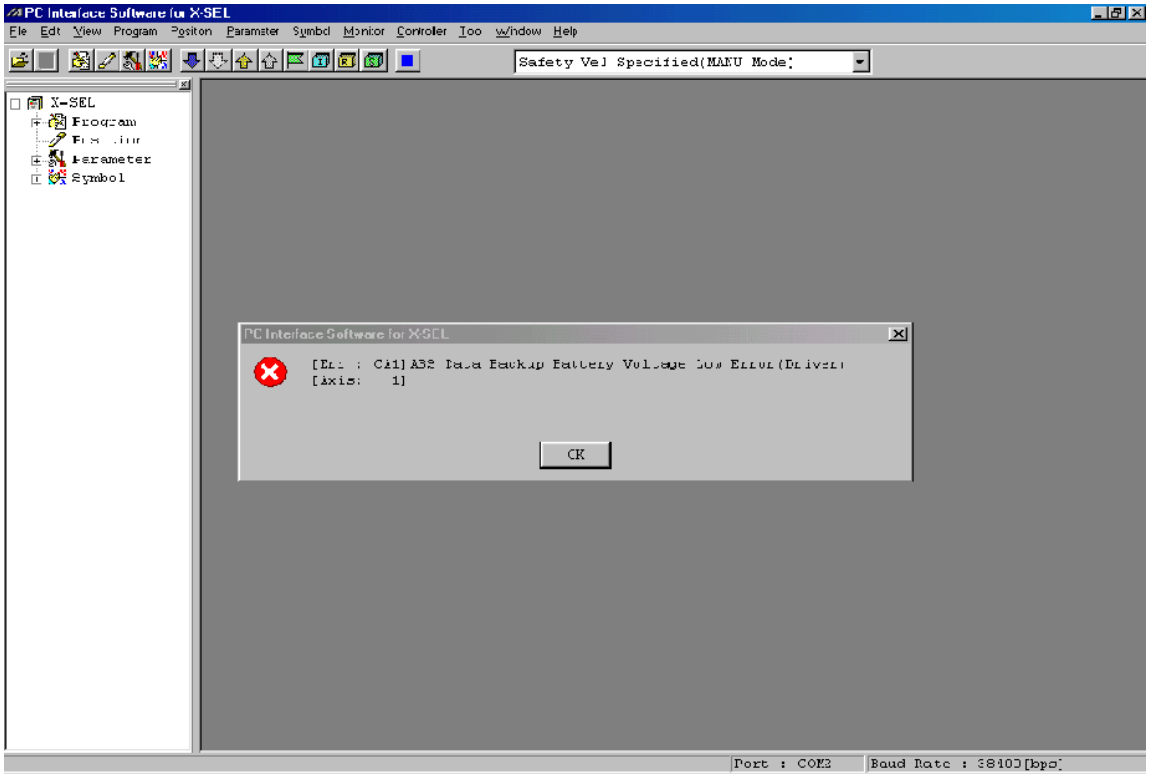

(7) From the [Monitor (M)] menu, select [Detailed Error Information (E)] to check the current error status. In the case of an encoder battery error, the following will be displayed (when axis 4 is using an absolute encoder). After checking the error status, close the [Detailed Error Information] window.

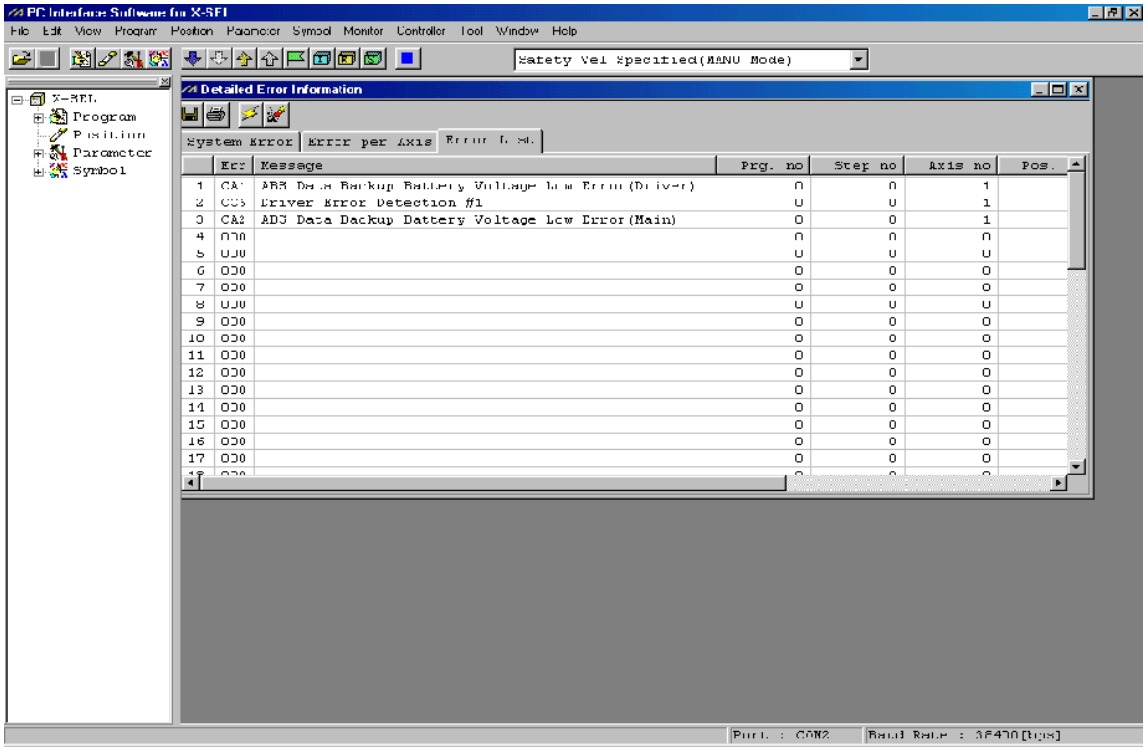

(8) From the [Controller (C)] menu, select [Absolute Reset (A)].

(9) When a [Warning] dialog box is displayed, click the [OK] button.

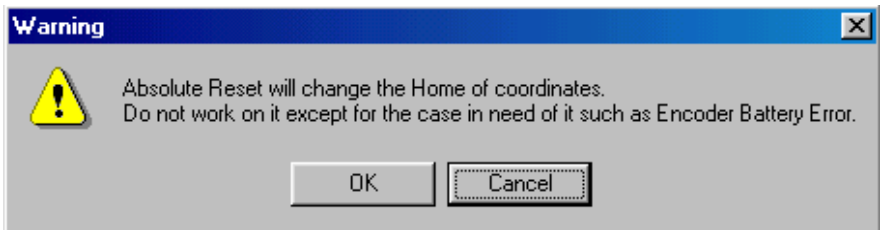

(10) The [Abs. Encoder Reset] dialog box will be displayed.
Click here to select the axis you wish to perform an absolute reset for.

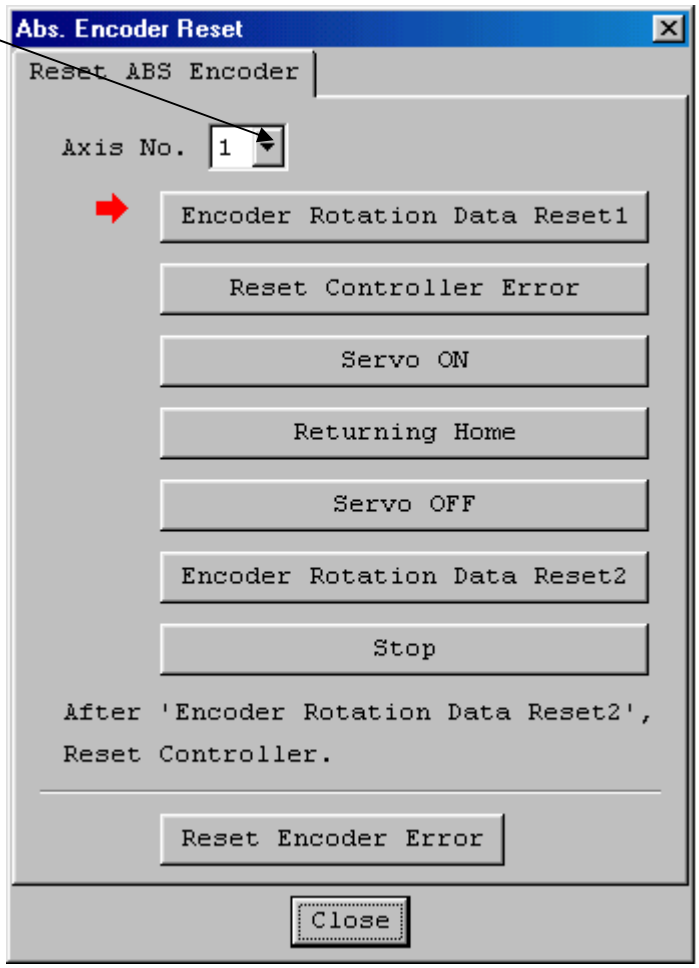

(11) Clicking the [Encoder Rotation Data Reset 1] button will display a [Warning] dialog box. Click the [Yes] button.

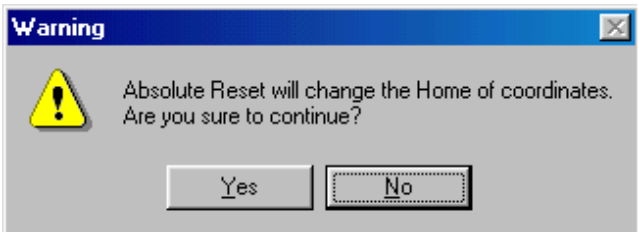

(12) Another [Warning] dialog box will be displayed. Click the [Yes] button.

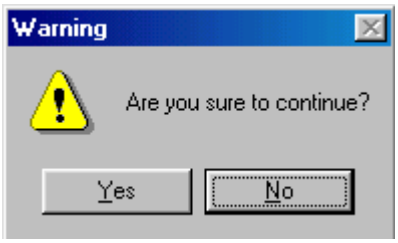

(13) When the processing of “encoder rotation data reset 1” is complete, the red arrow will move to the next item. Press the following processing buttons one by one (the red arrow will move to the next item when each process is completed):

1. Reset Controller Error
2. Servo ON
3. Returning Home
4. Servo OFF

   Note: With PC software version 1.1.0.0 or later, encoder rotation data reset 2 will be performed while the servo is still ON. Accordingly the servo OFF step will be skipped.
5. Encoder Rotation Data Reset 2

When the processing of “encoder rotation data reset 2” is complete, the red arrow will return to the position in (10). If you are performing an absolute encoder reset for another axis, select the target axis and perform the steps after (10).
To close the [Abs. Encoder Reset] dialog box, click the [Close] button.
(Note) If you must perform an absolute encoder reset for multiple axes, always perform steps (10) through (13) for all axes before performing the software reset in step (14).

(14) From the [Controller (C)] menu, select [Software Reset (R)].

(15) When the [Confirmation] dialog box is displayed, click the [Yes] button and restart the controller.

(Note) Commencing the operation without first executing a software reset or reconnecting the power may generate the following errors:
Error No. C70: ABS coordinate non-confirmation error
Error No. C6F: Home-return incomplete error

(16) If no other error is present, the controller's 7-segment LED display will show "rdy."

(17) This completes the absolute encoder reset.
To redo the absolute encoder reset, exit the X-SEL PC software and repeat the procedure from the beginning.

(Caution) On certain models, the current value may not return to "0" mm after an absolute encoder reset. However, this does not indicate any abnormality. Refer to the model list below for the coordinates to take effect after an absolute encoder reset.

Model	Lead	Current position after absolute encoder reset
RCS2-SA7C (R)	4	0
	8	1
	16	3
RCS2-SS7C (R)	6	-0.5
	12	1
RCS2-SS8C (R)	10	0
	20	2.5
	30	5
RCS2-RA5C (R)	4	0
	8	0
	16	2

* On all other models, the current value will return to "0" after an absolute encoder reset.

Chapter 9 Maintenance

- Routine maintenance and inspection are necessary so that the system will operate properly at all times. Be sure to turn off the power before performing maintenance or inspection.
- The standard inspection interval is six months to one year. If the environment warrants, however, the interval should be shortened.

1. Inspection points

- Check to see if the supply voltage to the controller is inside the specified range.
- Inspect the ventilation holes in the controller and remove dirt, dust and other foreign attachments, if any.
- Inspect the controller cables (controller → actuator) and check for any loose screws or cable disconnection.
- Check the controller mounting screws, etc., for looseness.
- Inspect each cable (axis link cable, general-purpose I/O cable, system I/O cable, power cable) for loose connection, disconnection, play, etc.

2. Spare consumable parts

Without spare parts, a failed controller cannot be repaired even when the problem is identified quickly. We recommend that you keep the following consumable parts as spares:

Consumable parts

- Cables
- System-memory backup battery: CR2032 by Toshiba --- Must be replaced after approx. 1.5 years*
- Absolute-data backup battery: AB-5 by IAI --- Must be replaced after approx. 2 years* (Absolute specification)
- Fuses

*: The actual replacement timing will vary depending on the use condition. For details, refer to “◎ Battery Backup Function” in Appendix.

Memory backup

The X-SEL Controller saves program, position and parameter data to its flash memory (when written to the flash memory). The data saved by the battery are positions, SEL global data and error lists. (Refer to Chapter 1, “How to Save Data,” of Part 3.)

When the battery voltage drops, an applicable error code will be displayed on the panel window.

Error Codes Indicating Low Battery Voltage

System-memory backup battery	A01 or A02
Absolute-data backup battery	A03 or A23

In the case of a low battery voltage of the absolute-data backup battery, the axis-driver status LED will also illuminate.

3. Replacement Procedure for System-Memory Backup Battery

Backing up the system memory
If “Other parameter No. 20, Backup-battery installation function type” is set to “2” (installed), the following SRAM data in the X-SEL Controller will be backed up by the system-memory backup battery on the panel board:

- Position data
- SEL global data (flags, integer/real variables, string variables)
- Error lists

Therefore, the above SRAM data will be destroyed if the system-memory backup battery is removed when “Other parameter No. 20, Backup-battery installation function type” is set to “2” (installed). For this reason, always follow the procedure below when replacing the system-memory backup battery:

(1) Turn on the controller power.

(2) Record (write down) the current setting of “Other parameter No. 20, Backup-battery installation function type.” (This will be used when reverting the parameter to its original setting following the replacement of system-memory backup battery.)

(3) If the PC software is installed in your PC, save the position data to a file using the PC software. The data will be used as a backup in case the SRAM data saved to the flash ROM fails.

(4) Change “Other parameter No. 20, Backup-battery installation function type” to “1” and transfer the setting to the controller, and then perform a flash ROM write. (The point data will be saved to the flash ROM.)

* Confirm that the flash ROM writing process has completed.

(5) Perform a software reset to restart the controller. (The SEL global data and error lists will be saved to the special area in the flash ROM.)

(6) When the controller has been restarted, turn off the power.

* Once the controller has been restarted, be sure to keep the power on until the initialization sequence number is no longer displayed on the panel window (while “InXX” is displayed following “8888”; XX indicates a number).

(7) Replace the system-memory backup battery. (SRAM data will be destroyed if steps (1) through (6) are not performed properly.)

Battery Replacement Procedure

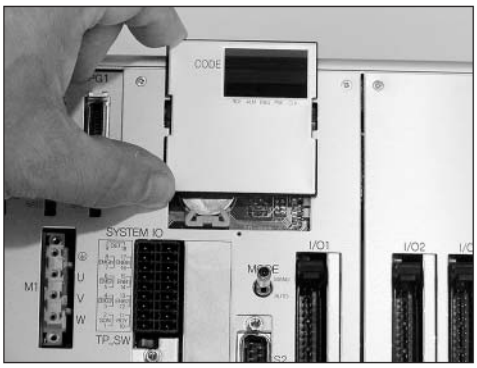

1) Remove the 7-segment LED panel from the controller. Slide the panel upward and pull it toward you to remove.

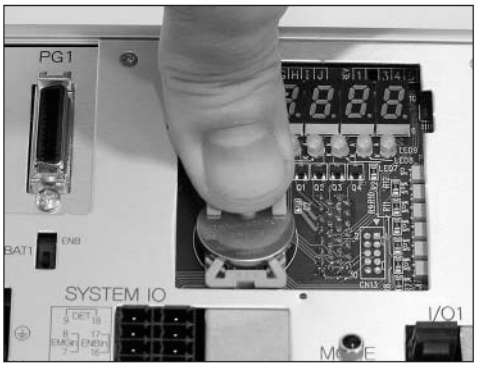

2) Press the center of the battery using a finger, as shown. The battery will come off from the holder.

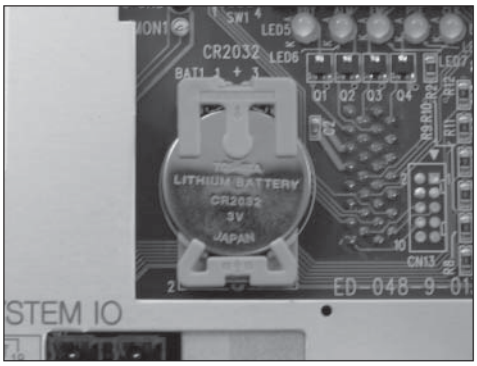

3) Install a new battery into the holder. Pay attention to the polarities (the + mark should be facing you).

4) Install the panel in the original position.

(8) When the replacement of system-memory backup battery is complete, confirm that the battery is installed securely and then turn on the controller power.

(9) Revert “Other parameter No. 20, Backup-battery installation function type” to the value recorded in step 2, transfer the setting to the controller, and then perform a flash ROM write.

* Confirm that the flash ROM writing process has completed.

(10) Perform a software reset (restart the controller).
(Note) Commencing the operation without first executing a software reset or reconnecting the power may generate the following errors:
Error No. C70: ABS coordinate non-confirmation error
Error No. C6F: Home-return incomplete error

(11) When the controller has been restarted, confirm that the SRAM data have been restored.

4. Replacement Procedure for Absolute-Data Backup Battery

The replacement procedure will vary depending on if errors are present at the time of replacement and if so, which errors are present (No.A23, 914, CA2).

- If no error is present, perform steps (1) to (8).
- If an absolute-data backup battery voltage-low warning (error No. A23) is present, perform steps (1) to (15).
- If an absolute-data backup battery voltage error (error No. 914 or CA2) is present, perform steps (1) to (8), and then perform an absolute encoder reset by referring to Chapter 8, “How to Perform An Absolute Encoder Reset.”

Note: Of the following steps, complete steps (3) to (6) within 15 minutes.

(1) Turn off the controller power (both the control power and drive power).

(2) Remove screws attaching the brake switch panel, and take out the panel.

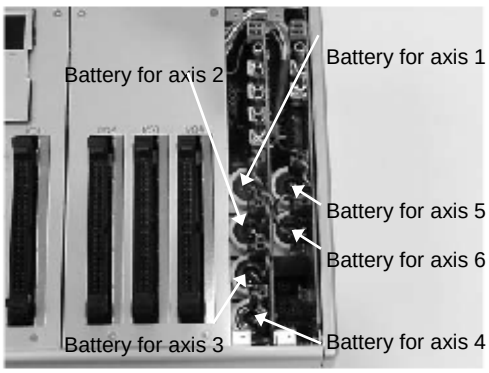

(3) Remove the applicable battery connector and pull out the battery.

(4) Set the absolute-data backup battery enable/disable switch to the bottom position.
(Note) This operation is not required if no error has generated or when an A23 error has generated.

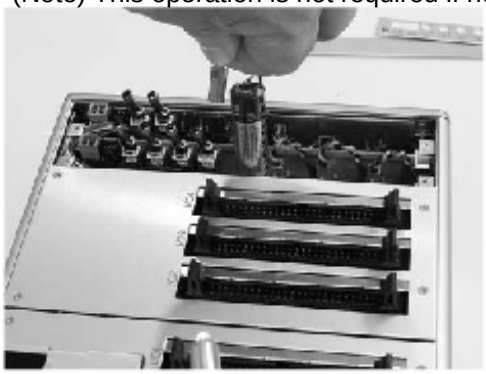

(5) Insert a new battery into the holder and plug in the battery connector.

(6) Turn on the controller power.
(7) Set the absolute-data backup battery enable/disable switch to the top (ENB) position.
(Note) This operation is not required if no error has generated or when an A23 error has generated.
(8) Turn off the controller power and install the brake switch panel with the screws. When the switch panel has been installed, turn on the power.
(9) Start the PC software online. From the [Controller (C)] menu, select [Absolute Reset (A)].
(10) When a [Warning] dialog box is displayed, click the [OK] button.

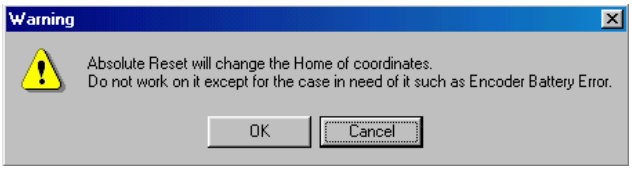

Warning

(11) The [Abs. Encoder Reset] dialog box will be displayed.

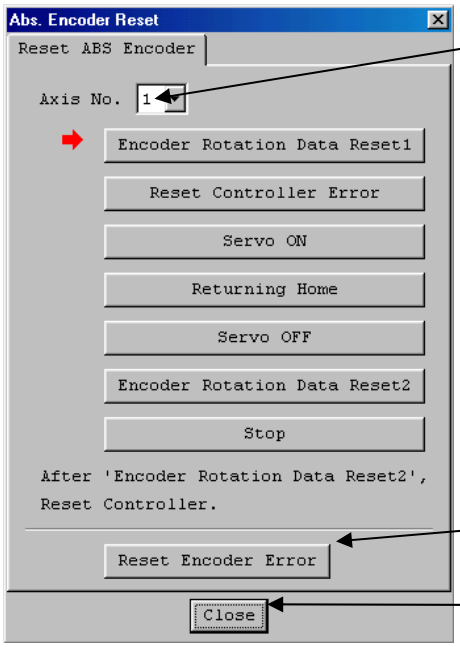

(12) For Axis No., select the number of the axis for which you have just replaced the battery.
Note) Do not click the [Encoder Rotation Data Reset 1] button.

(13) Click the [Reset Encoder Error] button.

(14) Close the dialog box.

Abs. Encoder Reset

(15) From the [Controller (C)] menu on the PC software screen, select [Software Reset (R)], and restart the controller.

Confirmation

(Note) Commencing the operation without first executing a software reset or reconnecting the power may generate the following errors:
Error No. C70: ABS coordinate non-confirmation error
Error No. C6F: Home-return incomplete error

This completes the reset procedure following a battery-voltage low warning.

Part 2 Operation

Chapter 1 Operation

How to Start a Program

With the X-SEL Controller, the stored programs can be started (run) using four methods. Of these methods, two are mainly used to debug programs or perform trial operations, while the remaining two are used in general applications on site.

The former two methods are “starting from the teaching pendant” and “starting from the PC software.”

These methods provide simple means of checking the operation. For details on “starting from the teaching pendant,” read the operation manual for the optional teaching pendant. For “starting from the PC software,” read the applicable explanation in the manual supplied with the PC software.

The latter two methods are “starting automatically via parameter setting” and “starting via external signal selection.” This chapter only explains the methods for “starting automatically via parameter setting” and “starting via external signal selection.”

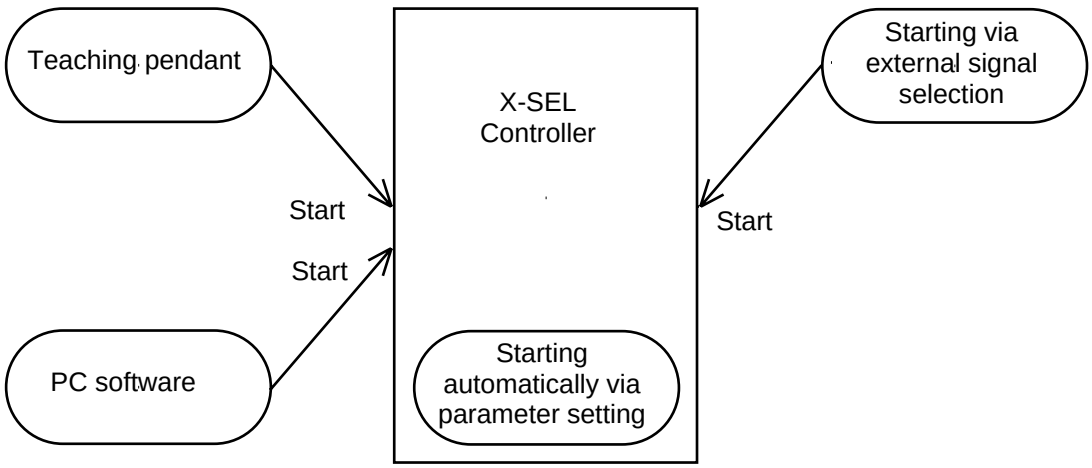

1. Starting a Program by Auto-Start via Parameter Setting

I/O parameter No. 33 (input function selection 003) = 1 (default factory setting)

This parameter is set using the teaching pendant or PC software.

Set an auto-start program number

Set the number of the program you wish to start automatically in other parameter No. 1 (auto-start program number).
Set the controller mode to AUTO.

Reset the controller

Reconnect the power, and the controller will be reset.

Automatically starting the program

Once the controller is reset in the above step, the program of the set number will start automatically.
*

⚠ Caution

[Note on starting a program by auto-start]
The automatic operation will begin immediately after the controller is reset, so the user may be surprised by unexpected movements of the equipment, particularly those caused by a sudden activation of the servo actuator. To ensure safety, always provide an interlocking function, such as allowing the program execution to proceed only after receiving a confirmation signal at the beginning of the program.

If you wish to start multiple programs at the same time, write multiple “EXPG” commands at the beginning of the main program to start the remaining programs. Provide safety measures for each program to be started.

* When I/O parameter No. 33 is set to “2”
  The program of the selected number will start automatically at the ON edge of input signal received by input port No. 3.
  The program will be terminated at the OFF edge.

2. Starting via External Signal Selection

Select a desired program number externally and then input a start signal.

(1) Flow chart

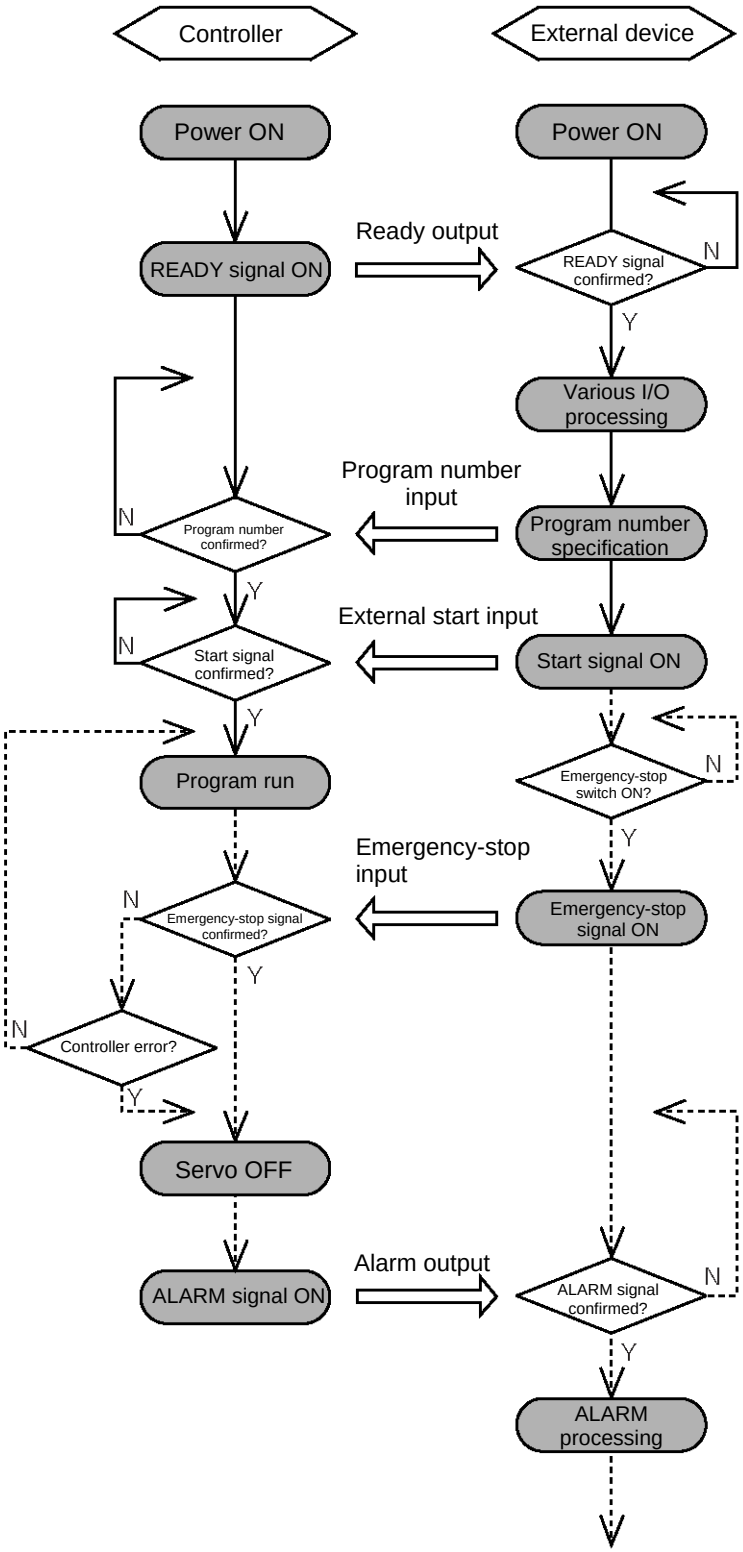

When the READY signal turns ON, the RDY lamp (green) on the controller front panel will illuminate.

Input a desired program number as a BCD code from the external device.

Input a start signal from the external device.

When the program is run, the number of the started program will be shown in the CODE display area of the controller front panel.

If an emergency-stop signal was input from the external device or a controller error occurred, the controller will turn off the servo power. (The RDY lamp will turn off.)

(2) Timing chart

[1] Program start

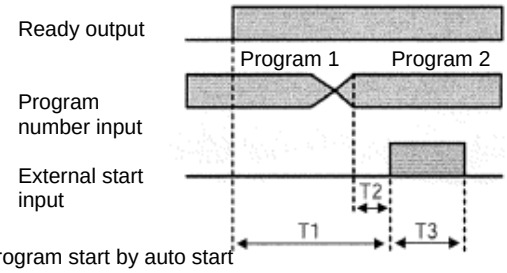

T1: Duration after the ready output turns ON until input of external start signal is permitted
T1 = 10 msec min.

T2: Duration after the program number is input until input of external start signal is permitted
T2 = 50 msec min.

T3: Input duration of external start signal
T3 = 100 msec min.

[2] Program start by auto start
* I/O parameter No. 33 = 2

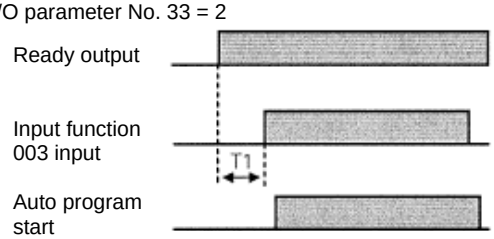

T1: Duration after the ready output turns ON until input of input function 003 is permitted
T1 = 10 msec min.

* Auto program start:
Set the program you want to start automatically as the auto start program number in other parameter No. 1.

[3] Software reset signal
* I/O parameter No. 31 = 1

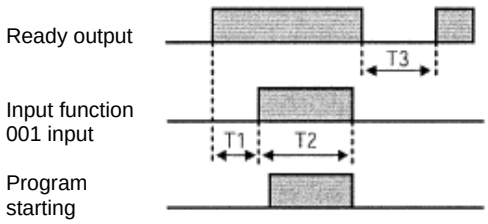

T1: Duration after the ready output turns ON until input of input function 001 is permitted
T1 = 10 msec min.

T2: Time before the software reset signal starts functioning
T2 = 1 sec min.

T3: Duration after the software reset signal is reset until the ready signal is output

[4] Servo on signal
* I/O parameter No. 32 = 1

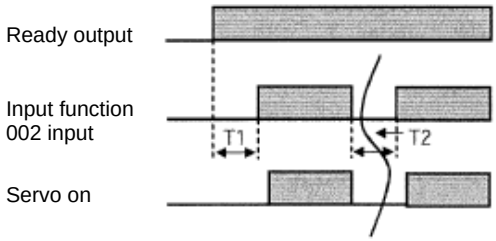

T1: Duration after the ready output turns ON until input of input function 002 is permitted
T1 = 10 msec min.

T2: Interval after the servo is turned off until the servo is turned on again
T2 = 1.5 sec min.

[5] When the recovery type after emergency stop or enable action is set to "Continued operation"
* Other parameter No. 10 = 2
Set I/O parameter No. 35 to "1" (Operation-pause reset signal)
Set I/O parameter No. 44 to "1" (Drive-source cutoff reset input)

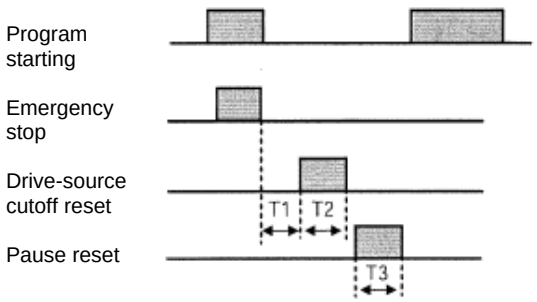

T1: Duration after the emergency-stop input is reset until input of drive-source cutoff reset signal is permitted
T1 = 2 sec min.

T2: Drive-source cutoff reset input duration
T2 = 10 msec min.

T3: Pause reset input duration
T3 = 10 msec min.

3. Drive-Source Recovery Request and Operation-Pause Reset Request

(1) Drive-source recovery request

1. How to request a drive-source recovery
   A drive-source recovery request can be issued using one of the following methods:
   - Set I/O parameter No. 44 to “1” (Input selection function 014 = Drive-source cutoff reset input), then input the ON edge to input port No. 14.
   - Select [Drive-Source Recovery Request (P)] from the [Controller (C)] menu on the PC software screen.
   - Select Ctl (controller operation) and RPwr (drive-source recovery request) on the mode selection screen of the teaching pendant.

2. Case where a drive-source request is required
   A drive-source recovery request is required in the following case:
   - A drive-source cutoff factor occurred when I/O parameter No. 44 was set to “1” → Recovery after the cutoff factor is removed.

(2) Operation-pause reset request

1. How to request an operation-pause reset
   An operation-pause reset request can be issued using one of the following methods:
   - Set I/O parameter No. 35 to “1” (Input selection function 005 = Operation-pause reset signal), then input the ON edge to input port No. 5.
   - Select [Operation-Pause Reset Request (L)] from the [Controller (C)] menu on the PC software screen.
   - Select Ctl (controller operation) and RAct (operation-pause reset request) on the mode selection screen of the teaching pendant.

2. Cases where an operation-pause reset request is required
   An operation-pause reset request is required in any of the following cases:
   - An emergency stop was actuated during automatic operation when other parameter No. 10 was set to “2” (Emergency-stop recovery type = Continued operation) (only during automatic operation) → Recovery (reset of operation pause) after the emergency stop is reset.
   - The automatic operation was stopped using the deadman switch or enable switch when other parameter No. 11 was set to “2” (Deadman/enable switch recovery type = Continued operation) (only during automatic operation) → Recovery (reset of operation pause) after the stop is reset.
   - An OFF-level input signal was received by input port No. 6 when I/O parameter No. 36 was set to ”1” (Input selection function 006 = Operation-pause signal) → Recovery (reset of operation pause) after an ON-level input signal is received by input port No. 6.

* If the case in 2 of (1) and any of the cases in 2 of (2) are present at the same time, a drive-source recovery request must be issued first, followed by an operation-pause reset request.

Part 3 Controller Data Structure

The controller data consists of parameters as well as position data and application programs used to implement SEL language.

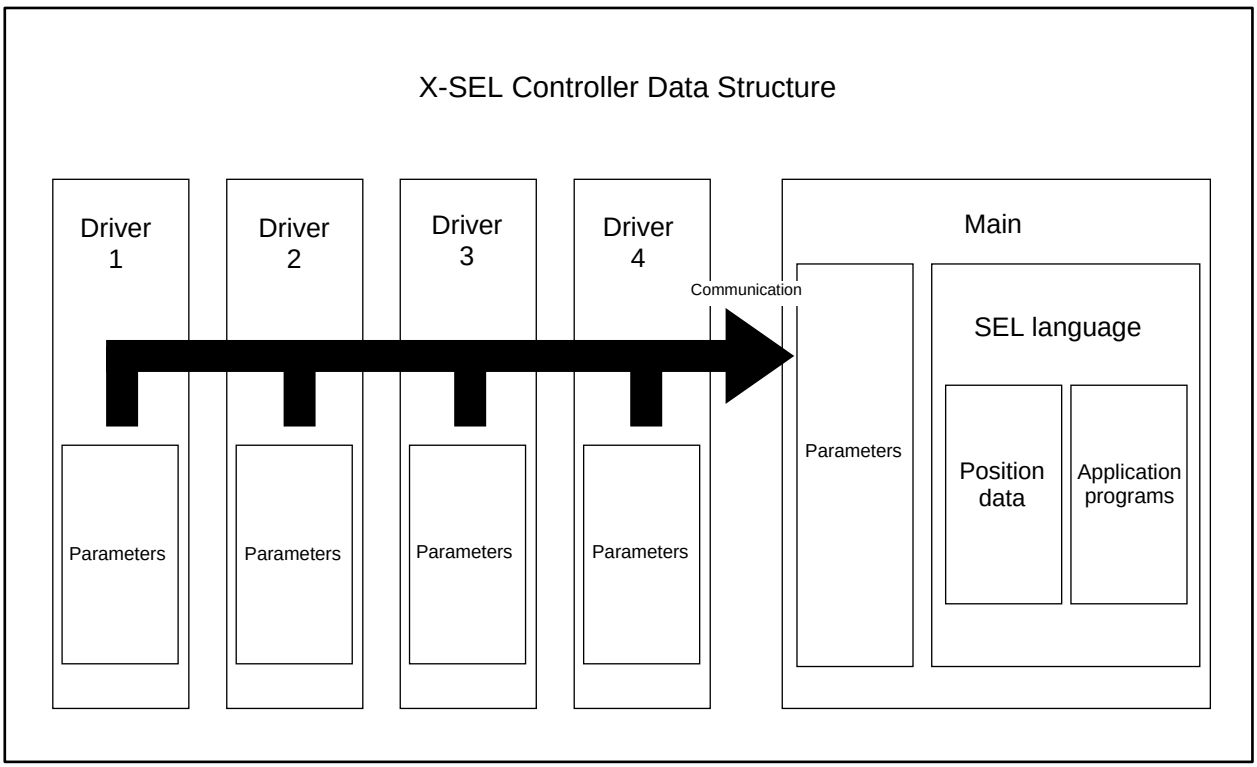

The user must create position data and application programs. The parameters are predefined, but their settings can be changed in accordance with the user's system.
Refer to Appendix, "List of Parameters," for details on the parameters.

Chapter 1 How to Save Data

Since the X-SEL Controller uses flash memory, some data are saved by battery backup while others are saved in the flash memory.
When data is transferred from the PC software or teaching pendant to the controller, the data is only written to the main CPU memory as shown in the diagram below and will be erased once the controller is powered down or reset.
For important data, always write to the flash memory so that they will not be lost.

1. Factory Settings: When the System-Memory Backup Battery is Used

(Other parameter No. 20 = 2 (System-memory backup battery installed))

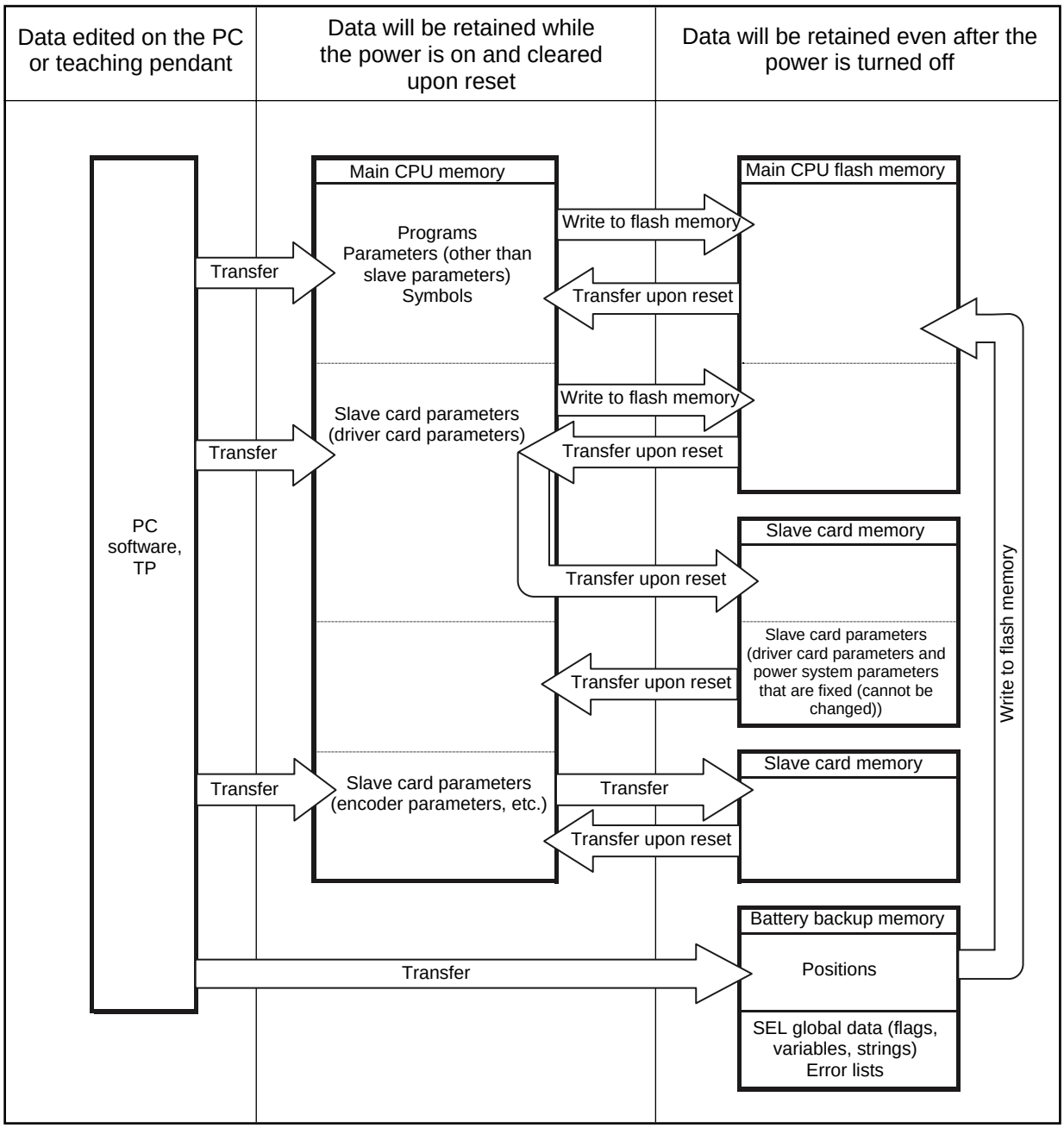

Since the programs, parameters and symbols are read from the flash memory at restart, the data in the temporary memory will remain the same as the original data before edit unless the edited data are written to the flash memory.

The controller always operates in accordance with the data in the main CPU memory (excluding the parameters).

2. When the System-Memory Backup Battery is Not Used

Other parameter No. 20 = 0 (System-memory backup battery not installed)

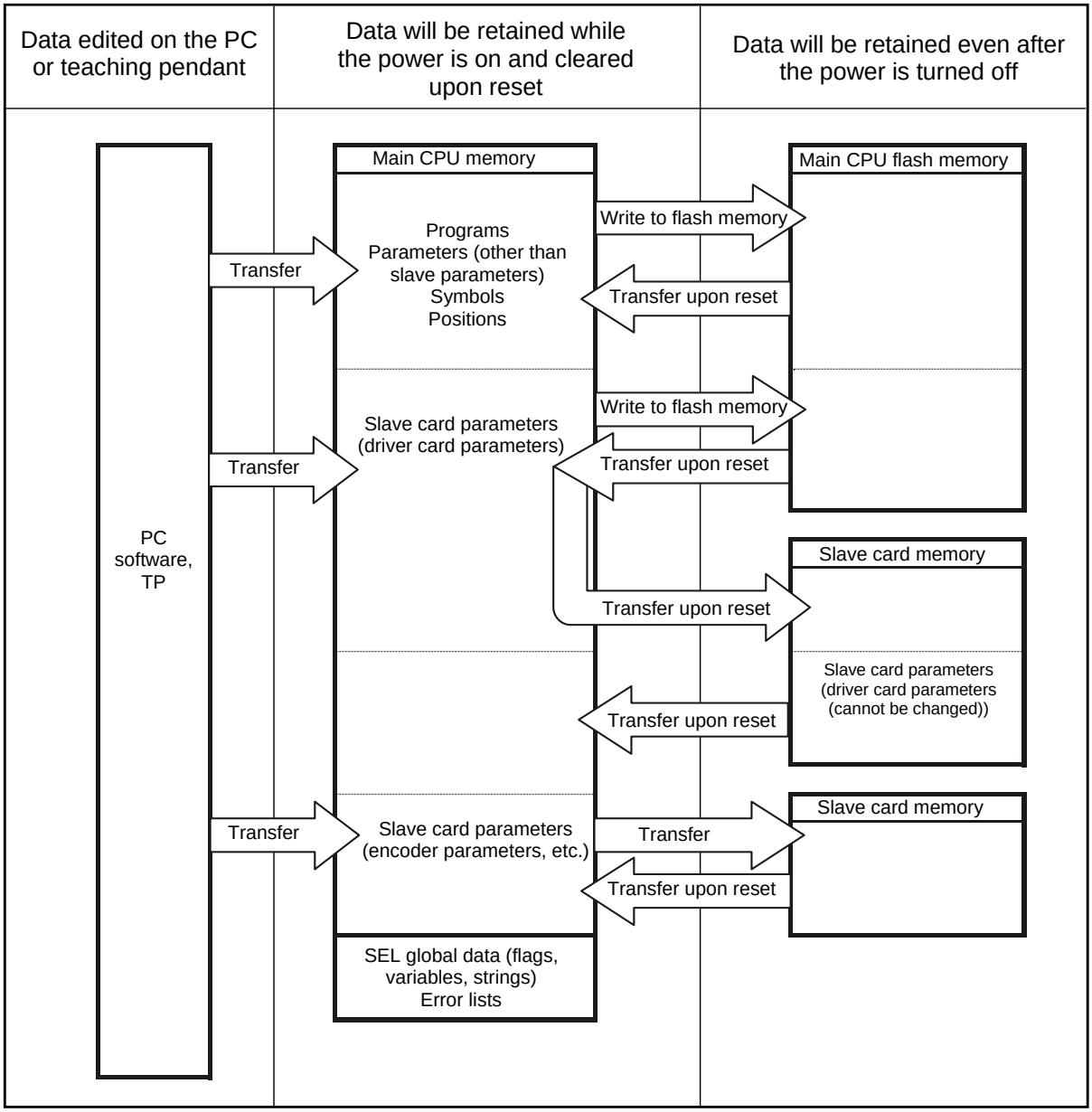

The programs, parameters, symbols and positions are read from the flash memory at restart. The data in the main CPU memory will remain the same as the original data before edit unless the edited data are written to the flash memory.
The controller always operates in accordance with the data in the main CPU memory (excluding the parameters).

Note: SEL global data cannot be retained if the backup battery is not installed.

3. Points to Note

Point to note when transferring data and writing to the flash memory

Never turn off the main power while data is being transferred or written to the flash memory. The data will be lost and the controller operation may be disabled.

Point to note when saving parameters to a file

The encoder parameters are stored in the EEPROM of the actuator's encoder itself (unlike other parameters, they are not stored in the EEPROM of the controller). The encoder parameters will be read from the encoder's EEPROM to the controller when the power is turned on or upon software reset.

Therefore, if the parameters are saved to a file after turning on the controller (or restarting it via a software reset) without an actuator (encoder) connected, the encoder parameters saved to the file will become invalid.

Point to note when transferring a parameter file to the controller

When a parameter file is transferred to the controller, the encoder parameters will be transferred to the EEPROM of the encoder (excluding manufacturing/function information).

Therefore, if the parameter file transferred to the controller has been read from a controller that was started without an actuator connected, invalid encoder parameters will be written to the encoder's EEPROM (provided that an actuator is connected to the controller to which the file was transferred).

When saving the parameters to a file, do so with an actuator connected to the controller.

Chapter 2 X-SEL Language Data

1. Values and Symbols Used in SEL Language

1.1 List of Values and Symbols Used

The various functions required in a program are represented by values and symbols.

Function	Global range	Local range	Remarks
Input port	000 ~ 299 (300)		Varies depending on the function.
Output port	300 ~ 599 (300)		Varies depending on the function.
Flag	600 ~ 899 (300)	900 ~ 999 (100)	
Variable (integer)	200 ~ 299 (100) 1200 ~ 1299 (100)	1 ~ 99 (99) 1001 ~ 1099 (99)	99 is used for IN, INB, OUT, OUTB, etc.
Variable (real)	300 ~ 399 (100) 1300 ~ 1399 (100)	100 ~ 199 (100) 1100 ~ 1199 (100)	199 is used for PPUT, PGET, PARG, etc.
String	300 ~ 999 (700)	1 ~ 299 (299)	
Tag number		1 ~ 99 (99)	
Subroutine number		1 ~ 99 (99)	
Zone number	1 ~ 4 (4)		
Pallet number		1 ~ 10 (10)	
Axis number	1 ~ 6 (6)		Varies depending on the function.
Axis pattern	0 ~ 111111		
Position number	1 ~ 4000 (4000)		
Program number	1 ~ 64 (64)		
Step number	1 ~ 6000 (6000)		
Task level	NORMAL/HIGH (2)		
SIO channel number	1 ~ 2 (2)		
Wait timer		1	
1-shot pulse timer		16 (Number of timers that can be operated simultaneously)	
Ladder timer		Local flag (100)	
Virtual input port (SEL system → SEL user program)	7000 ~ 7299 (300)		
Virtual output port (SEL user program → SEL system)	7300 ~ 7599 (300)		
Number of symbol definitions	1000		
Number of times symbol can be used in commands	5000 (including literals)		
	Used in common from any program.	Referenced separately in each program. Cleared when the program is started.	

⚠ Caution

- Variables 99 and 199 are special variables this system uses in operations. Avoid using these two variables for general purposes.
- The values in the table represent ranges that can be processed by software. Items that require physical devices, such as I/O ports and functions relating to axis number and SIO, will be determined by possible combinations and models of commercial boards, etc., available for each device application.

- The variables and flags in the global range will be retained even after the controller power is turned off. (When other parameter No. 20 is set to “2.” Refer to Chapter 1, “How to Save Data,” of Part 3.)

- The variables and flags in the local range will be cleared when the program is started.

- Ranges of values that can be used in SEL language
  Integers and real numbers can be used. However, pay due attention to the following limitations:

(1) Numeric data
The X-SEL Controller can handle values of maximum eight digits including a sign and a decimal point.
Integer: -9,999,999 to 99,999,999
Real number: Maximum eight digits including a sign and decimal point, regardless of the size of value
Example) 999999.9, 0.123456, -0.12345
If a floating point is used in operations, the number of valid digits will be limited to seven. Also note that operations using a floating point are subject to error.

(2) Position data
The input range of position data consists of four integer digits and three decimal digits.
–9999.999 to 9999.999
(The maximum value varies depending on the actuator model.)
If position data are used in internal operations as numeric data (repeated multiplications and divisions), the accuracy of the last digit may decrease.

Consider the above limitations fully when using values. Particularly when the CPEQ command is used in a comparison operation using real numbers, a match will rarely result. In this case, the CPLE or CPGE command that looks at the magnitude relationship of two terms must be used.

1.2 I/O Ports

(1) Input ports
Used as input ports for limit switches, sensor switches, etc.

Input number assignment
000 to 031 (standard)

(2) Output ports
Used as various output ports.

Output number assignment
300 to 315 (standard)

1.3 Virtual I/O Ports

(1) Virtual input ports

Port No.	Function
7000	Always OFF
7001	Always ON
7002	Voltage low warning for system-memory backup battery
7003	Abnormal voltage of system-memory backup battery
7004	(For future expansion = Use strictly prohibited)
7005	(For future expansion = Use strictly prohibited)
7006	Top-level system error = Message level error is present
7007	Top-level system error = Operation-cancellation level error is present
7008	Top-level system error = Cold-start level error is present
7009	(For future expansion = Use strictly prohibited)
7010	Drive-source cutoff factor is present (including when waiting for cutoff reset input)
7011	Latch signal indicating that all-operation-cancellation factor is present (latch signal for recognizing 1-shot cancellation factor; latch is cancelled by 7300-ON)
7012	All-operation-pause factor is present (including when waiting for restart switch signal) (Valid only during automatic operation recognition)
7013	All-servo-axis-interlock factor is present (all-operation-pause factor + interlock input-port factor)
7014	(For future expansion = Use strictly prohibited)
7015	Voltage low warning for axis-1 absolute-data backup battery
7016	Abnormal voltage of axis-1 absolute-data backup battery (latched until power-on reset or software reset)
7017	Voltage low warning for axis-2 absolute-data backup battery (main application version 0.28 or later)
7018	Abnormal voltage of axis-2 absolute-data backup battery (latched until power-on reset or software reset)
7019	Voltage low warning for axis-3 absolute-data backup battery
7020	Abnormal voltage of axis-3 absolute-data backup battery (latched until power-on reset or software reset)
7021	Voltage low warning for axis-4 absolute-data backup battery
7022	Abnormal voltage of axis-4 absolute-data backup battery (latched until power-on reset or software reset)
7023	Voltage low warning for axis-5 absolute-data backup battery (valid only when the controller supports up to 6 axes)
7024	Abnormal voltage of axis-5 absolute-data backup battery (latched until power-on reset or software reset) (valid only when the controller supports up to 6 axes)
7025	Voltage low warning for axis-6 absolute-data backup battery (valid only when the controller supports up to 6 axes)
7026	Abnormal voltage of axis-6 absolute-data backup battery (latched until power-on reset or software reset) (valid only when the controller supports up to 6 axes)
7027 ~ 7040	(For future expansion = Use strictly prohibited)
7041 ~ 7070	(For future expansion = Use strictly prohibited)
7071	In AUTO mode
7072	During automatic operation
7073 ~ 7100	(For future expansion = Use strictly prohibited)
7101	Running program No. 01 (including during pause)
~	~
7164	Running program No. 64 (including during pause)
7165 ~ 7299	(For future expansion = Use strictly prohibited)

(2) Virtual output ports

Port No.	Function
7300	Latch cancellation output for a latch signal indicating that all-operation-cancellation factor is present (7011) (latch is cancelled only when operation-cancellation factor is no longer present) (7300 will be turned OFF following an attempt to cancel latch.)
7301 ~ 7380	(For future expansion = Use strictly prohibited)
7381 ~ 7399	(For future expansion = Use strictly prohibited)
7400 ~ 7599	(For future expansion = Use strictly prohibited)

1.4 Flags

Contrary to its common meaning, the term “flag” as used in programming means “memory.” Flags are used to set or reset data. They correspond to “auxiliary relays” in a sequencer.

Flags are divided into global flags (Nos. 600 to 899) that can be used in all programs, and local flags (Nos. 900 to 999) that can be used only in each program.

Global flags will be retained (backed up by battery) even after the power is turned off.

Local flags will be cleared when the power is turned off.

Flag number	600 ~ 899	Can be used in all programs	“Global flags”
Flag number	900 ~ 999	Used only in each program	“Local flags”

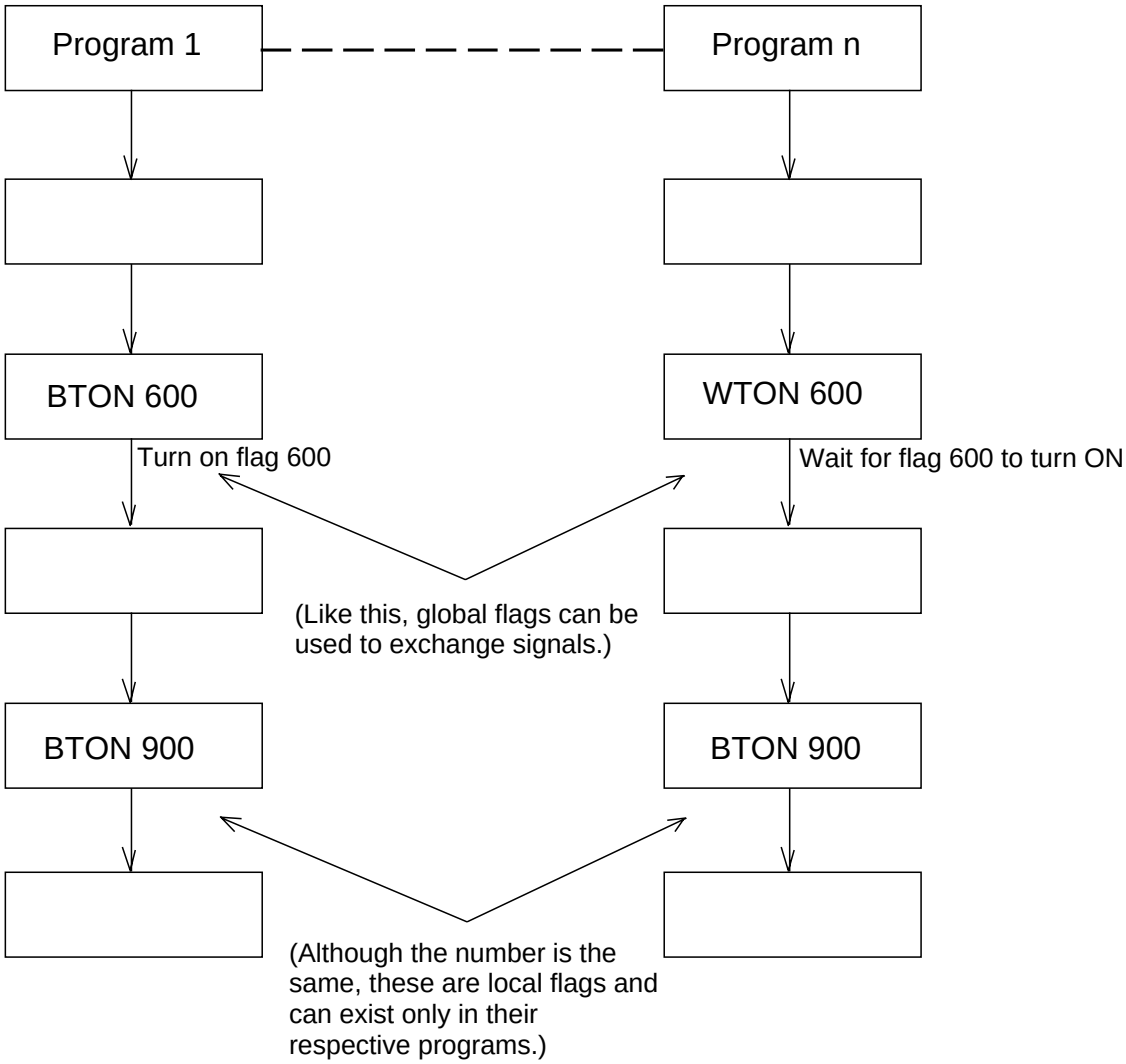

1.5 Variables

(1) Meaning of variable

"Variable" is a technical term used in software programming. Simply put, it means "a box in which a value is put." Variables can be used in many ways, such as putting in or taking out a value and performing addition or subtraction.

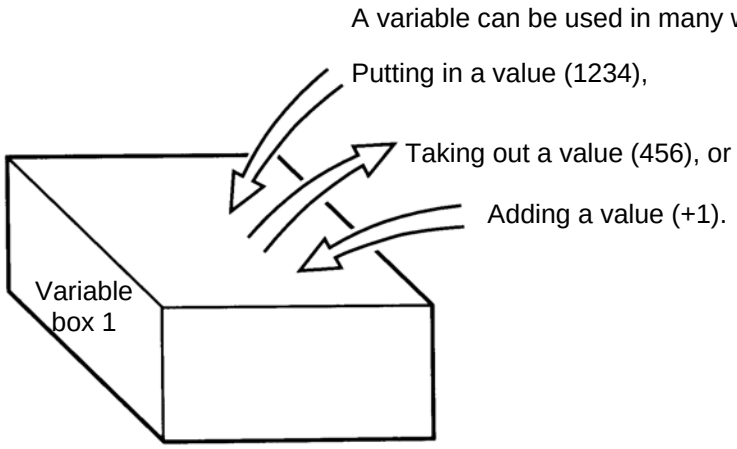

Command	Operand 1	Operand 2
ADD	1	1

If this command is applied to variable box 1, which already contains 2, then 1 will be added to the current value and 3 will result.

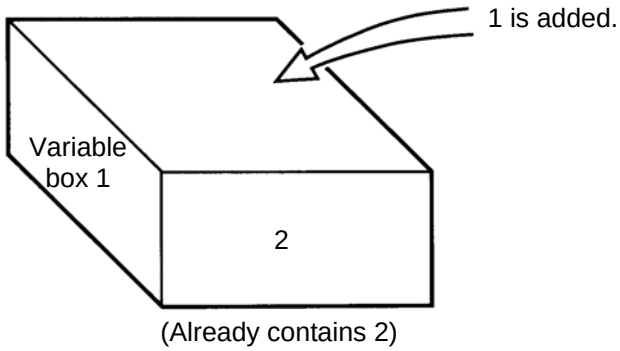

(Already contains 2)

(2) Types of variables
Variables are classified into two types, as follows:

1. Integer variables
These variables cannot handle decimal places.
[Example] 1234

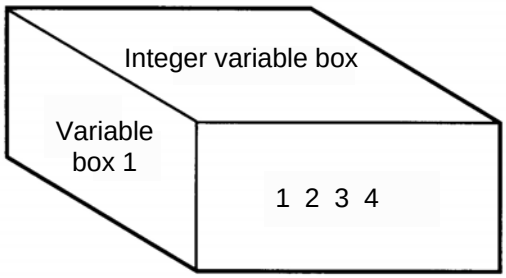

Integer variable number	200 ~ 299 1200 ~ 1299	Can be used in all programs	“Global integer variables”
Integer variable number	1 ~ 99 1001 ~ 1099	Used only in each program	“Local integer variables”

⚠ Caution

Integer 99 is a special register this system uses in integer operations. Any value in the range from –9,999,999 to 99,999,999 can be input in programs.

2. Real variables
Actual values. These variables can handle decimal places.
[Example] 1234.567
(Decimal point)

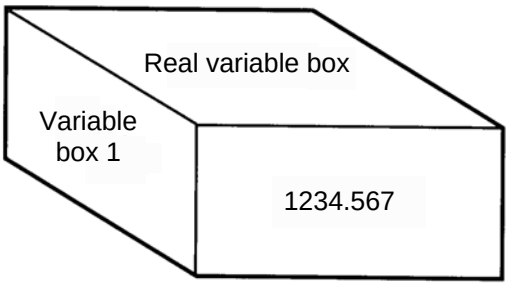

Real variable number	300 ~ 399 1300 ~ 1399	Can be used in all programs	“Global real variables”
Real variable number	100 ~ 199 1100 ~ 1199	Used only in each program	“Local real variables”

⚠ Caution

Real number 199 is a special register this system uses in real-number operations. Any value in the range from –99,999.9 to 999,999.9 (eight digits including a sign) can be input in programs.

3. Variables with “*” (asterisk) (indirect specification)
An “*” (asterisk) is used to specify a variable.
In the following example, the content of variable box 1 will be put in variable box 2. If variable box 1 contains “1234,” then “1234” will be put in variable box 2.

Command	Operand 1	Operand 2
LET	1	1234

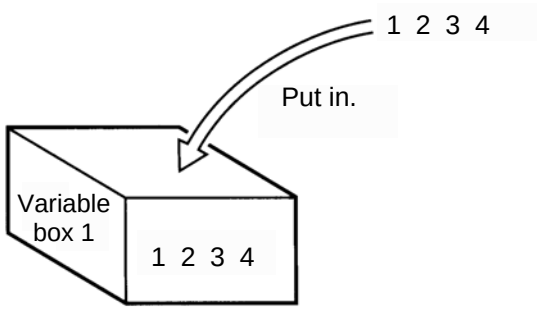

Command	Operand 1	Operand 2
LET	2	*1

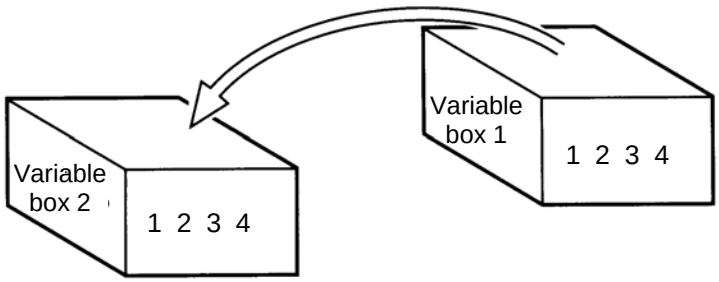

The above use of variables is called “indirect specification.”

An “*” is also used when indirectly specifying a symbol variable (refer to 1.8, “Symbols”).

Command	Operand 1	Operand 2	
LET	ABC	1	Put 1 in variable ABC.
LET	BCD	2	Put 2 in variable BCD.
ADD	ABC	*BCD	Add the content of variable BCD, or 2, to variable ABC. (The content of variable ABC becomes 3.)

1.6 Tags

The term “tag” means “heading.”
Tags are used in the same way you attach labels to the pages in a book you want to reference frequently.
A tag is a destination specified in a jump command “GOTO.”

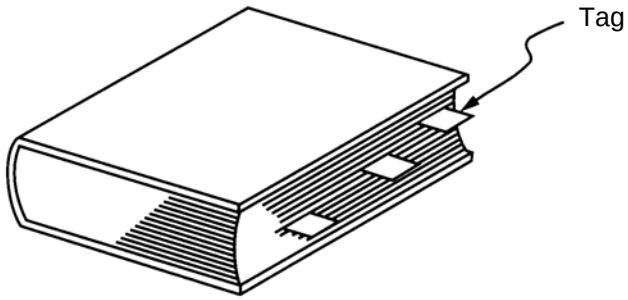

Command	Operand 1
TAG	Tag number (Integer between 1 and 99)

They are used only in each program.

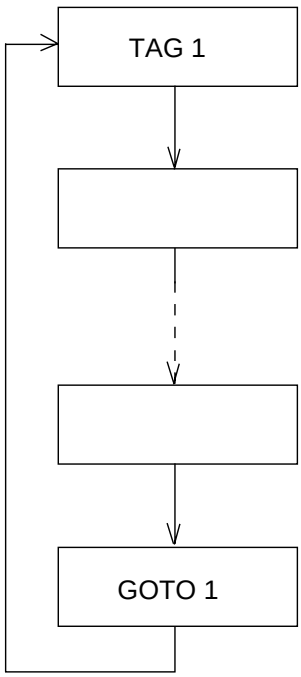

1.7 Subroutines

By taking out the parts of a program that are used repeatedly and registering them as “subroutines,” the same processing can be performed with fewer steps. (A maximum of 15 nests are accommodated.)

They are used only in each program.

Command	Operand 1
EXSR	Subroutine number (Integer between 1 and 99; variable is also supported)

Subroutine execution command

Command	Operand 1
BGSR	Subroutine number (Integer between 1 and 99)

Subroutine start declaration

Command	Operand 1
EDSR	—

Subroutine end declaration

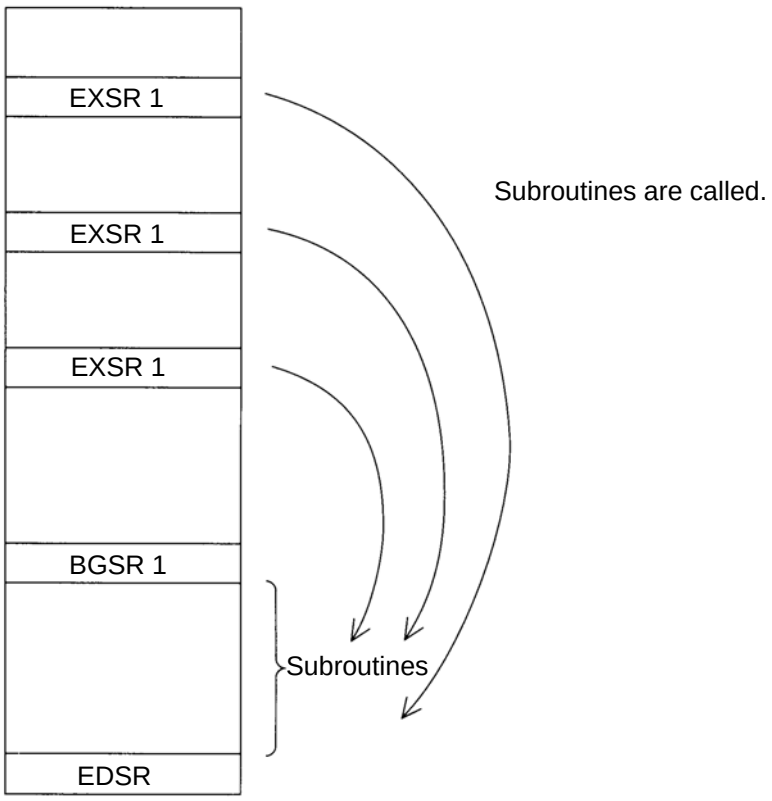

1.8 Symbols

In the X-SEL Controller, values such as variable numbers and flag numbers can be handled as symbols. For the method to edit symbols, refer to “Editing Symbols” in the operation manual for X-SEL teaching pendant or “Symbol Edit Window” in the operation manual for X-SEL PC software.

(1) Supported symbols
The following items can be expressed using symbols:
Variable number, flag number, tag number, subroutine number, program number, position number, input port number, output port number, axis number, constant

(2) Description rules of symbols
1. A maximum of nine single-byte alphanumeric characters or underscore starting with an alphabet (Note: The length of a character-string literal must not exceed eight single-byte characters.)
   * If the PC software version is 1.1.0.5 or later or the teaching pendant version is 1.04 or later, an underscore can be used as the first character in a symbol.
   * If the PC software version is 1.1.05 or later, single-byte ASCII code characters from 21h to 7Eh (limited to those that can be input via keyboard) can be used as the second and subsequent characters.
   * Exercise caution that the same ASCII code may be expressed differently between the PC software and the teaching pendant because of the different fonts used by the two. (The same applies to character-string literals.)
     5Ch --- PC software: Backslash \ (overseas specifications, etc.)
     Teaching pendant: Yen mark ¥
     7Eh --- PC software: ~
     Teaching pendant: Right arrow →
2. Symbols of the same name must not be defined within each function. (The same local symbol can be used in different programs.)
3. Symbols of the same name must not be defined within the flag number, input-port number or output-port number group. (The same local symbol can be used in different programs.)
4. Symbols of the same name must not be defined within the integer-variable number or real-variable number group. (The same local symbol can be used in different programs.)
5. Symbols of the same name must not be defined within the integer constant or real constant group.

(3) Number of symbols that can be defined: Maximum 1000

(4) Number of times symbols can be used in all SEL programs: Maximum 5000 times including character-string literals
   * If symbol is used in all of the input condition, operand 1, operand 2 and output fields, it is deemed that symbol is used four times in one step.

1.9 Character-String Literals

Character-string literals are used in certain string-operation commands and consist of the portion enclosed by single quotation marks (‘ ‘) (maximum eight single-byte characters).
With the PC software, single-byte ASCII code characters from 20h to 7Eh (limited to those that can be input via keyboard) can be used inside the single quotation marks. With the teaching pendant, single-byte alphanumeric characters and single-byte underscores can be used.

1.10 Axis Specification

Axes can be specified based on axis number or axis pattern.

(1) Axis numbers and how axes are stated
Each of multiple axes is stated as follows:

Axis number	How axis is stated
1	Axis 1
2	Axis 2
3	Axis 3
4	Axis 4
5	Axis 5
6	Axis 6

The axis numbers stated above can also be expressed using symbols.

Use axis number if you wish to specify only one of multiple axes.

- Commands that use axis specification based on axis number
  BASE, PPUT, PGET, ACHZ, AXST, PASE, PCHZ, ACHZ, PARG

(2) Axis pattern
Whether or not each axis will be used is indicated by “1” or “0.”

(Upper) (Lower)

Axis number	Axis 6	Axis 5	Axis 4	Axis 3	Axis 2	Axis 1
Used	1	1	1	1	1	1
Not used	0	0	0	0	0	0

[Example] When axes 1 and 2 are used

Axis 2 ↓

000011 --- (The 0s in front are not necessary. With the 0s removed, the expression reads “11.”)

↑ Axis 1

[Example] When axes 1 and 4 are used

Axis 4 ↓

1001 --- (In this case, the 0s are needed to indicate the position of axis 4.)

↑ Axis 1

Indirect specification of axis pattern in a variable
The axis pattern is considered a binary value, and a converted decimal value is assigned to a variable.

[Example] To perform home return for axis 3 only, you can specify as follows based on axis pattern:

```
HOME    100
```

In indirect specification, 100 (binary) is expressed as 4 (decimal), so the same operation can be specified as follows:

```
LET     6  4
HOME    *6
```

If you must select and specify multiple axes at the same time, use axis pattern.

- Commands that use axis specification based on axis pattern
  OFST, GRP, SVON, SVOF, HOME, JFWN, JFWF, JBWN, JBWF, STOP, PTST, PRED
  CHVL, PBND, WZNA, WZNO, WZFA, WZFO

X-SEL language consists of a position part (position data = coordinates, etc.) and a command part (application program).

2. Position Part

As position data, coordinates, speeds, accelerations and decelerations are set and stored.

± 99999.999 mm

*1, 2
1 ~ 2500/mmsec

*2
Standard
0.3 G

*2
Standard
0.3 G

Position No.	Axis 1	Axis 2	Axis 3	Axis 4	Axis 5	Axis 6	Speed	Acceleration	Deceleration
1									
2									
3									
3998									
3999									
4000									

*1 Varies depending on the actuator model.
*2 If speed, acceleration or deceleration is set in the position data, the setting will be given priority over the corresponding data set in the application program. Leave the position data fields empty if you wish to enable the corresponding data in the application program.

Values pertaining to a rotating axis are processed in degrees instead of millimeters.

If axis-specific parameter No. 1 (axis operation type) is set to “1” (rotational movement axis (angle control)) for a given axis, all millimeter values pertaining to that axis (including parameters, etc.) will be processed in degrees.

If the gear ratio parameters (axis-specific parameter Nos. 50 and 51) are set correctly, the angles (deg) will represent those of the body of rotation at the end.

Example) Distance 1 mm → 1 deg
Speed 1 mm/sec → 1 deg/sec
Acceleration/deceleration 1 G = 9807 mm/sec^2 → 9807 deg/sec^2

3. Command Part

The primary feature of SEL language is its very simple command structure. Since the structure is simple, there is no need for a compiler (to translate into computer language) and high-speed operation is possible via an interpreter (the program runs as commands are translated).

3.1 SEL language Structure

The table below shows the structure of one command step.

Extension condition (AND, OR)	Input condition (I/O, flag)	Command, declaration			Output (Output port, flag)
		Command, declaration	Operand 1	Operand 2	

Using a ladder diagram, this is expressed as follows:

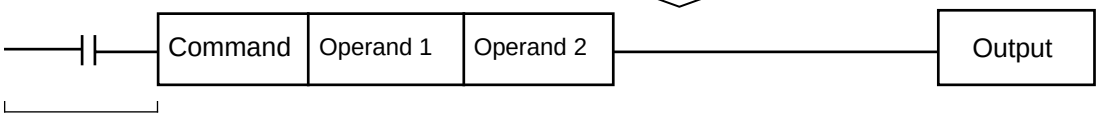

(1) The condition before the command is equivalent to “IF ~ THEN…” in BASIC.

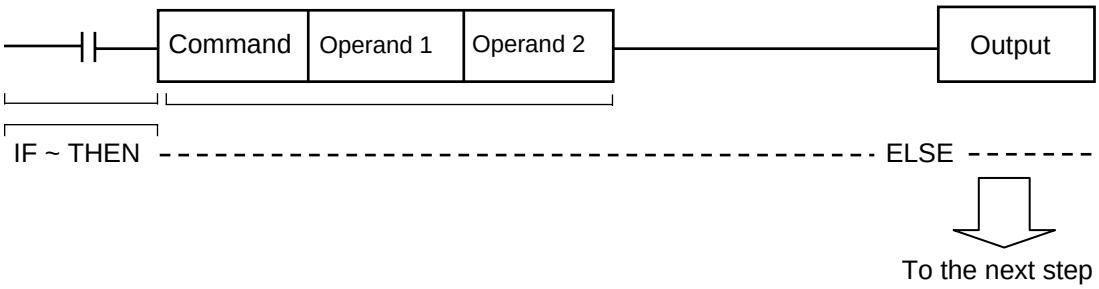

1. If the input condition is satisfied, the command will be executed. If there is an output specification, the specified output port will be turned ON. If the input condition is not satisfied, the program will proceed to the next step regardless of the command that follows (e.g., WTON, WTOF). Obviously nothing will happen at the output port, but caution must be exercised.
2. If no condition is set, the command will be executed unconditionally.
3. To use the condition in reverse logic (so-called “contact b logic”), add "N" (NOT) to the condition.
4. The input condition supports input port, output port and flag.
5. The operand 1, operand 2 and output fields can be specified indirectly.

(2) The output field, which follows the command, operand 1 and operand 2 fields, will specify the following action:

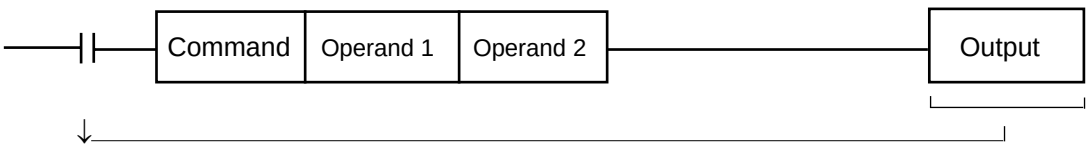

1. In the case of a control command relating to actuator operation, etc., the output will turn OFF the moment the execution of command is started, and turn ON when the execution is completed. In the case of a calculation operation command, etc., the output will turn ON if the result corresponds to a certain value, and turn OFF if not.
2. The output field supports output port and flag.

3.2 Extension Condition

Conditions can be combined in a complex manner.

AND extension (Ladder diagram)

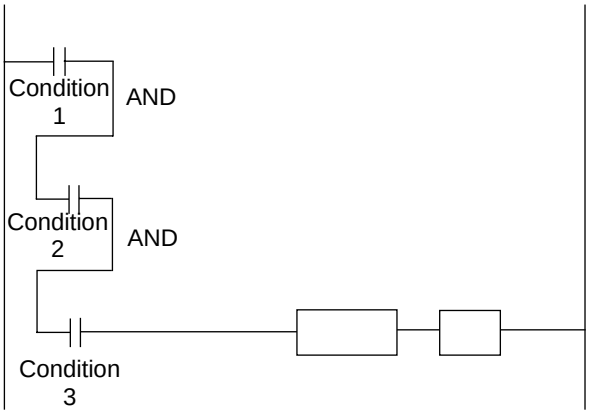

(SEL language)

Extension condition	Input condition	Command			Output
		Command	Operand 1	Operand 2	
	Condition 1				
A	Condition 2				
A	Condition 3	Command	Operand 1	Operand 2	

OR extension

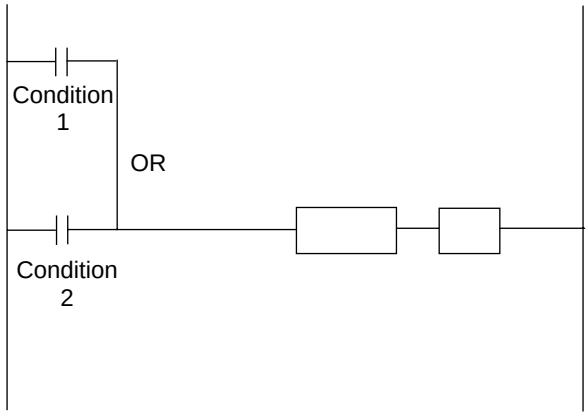

Extension condition	Input condition	Command			Output
		Command	Operand 1	Operand 2	
	Condition 1				
O	Condition 2	Command	Operand 1	Operand 2	

AND extension and OR extension

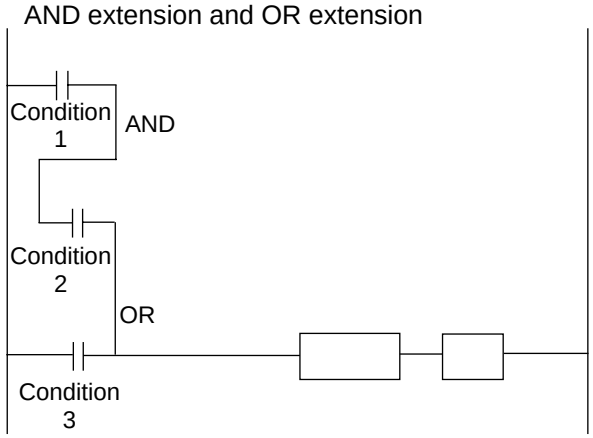

Extension condition	Input condition	Command			Output
		Command	Operand 1	Operand 2	
	Condition 1				
A	Condition 2				
O	Condition 3	Command	Operand 1	Operand 2	

Part 4 Commands

Chapter 1 List of SEL Language Command Codes

1. By Function

Variables can be specified indirectly in the operand 1, operand 2 and output fields.
Symbols can be input in the condition, operand 1, operand 2 and output fields.
The input items in ( ) under operand 1 and operand 2 are optional.
Once an “actuator control declaration” command is executed in a program, the command will remain valid as long as the program is running. To change the values (in operand 1, operand 2, etc.) already set by the “actuator control declaration” command, the necessary parts of the program must be set again. In other words, the values set by the last executed command will prevail.
The output field will be turned OFF when the command is executed. Once the execution is completed, the output field may be turned ON depending on the operation type condition in the output field. (The output field will remain OFF if the condition is not satisfied.)
Note: The output field of a comparison command CPxx (CPEQ, CPNE, CPGT, CPGE, CPLT and CPLE) will not be turned OFF when the command is executed.

Operation type in the output field
CC: Command was executed successfully,
ZR: Operation result is zero, PE: Operation is complete,
CP: Command part has passed, TU: Time up

EQ: Operand 1 = Operand 2, NE: Operand 1 ≠ Operand 2,
GT: Operand 1 > Operand 2, GE: Operand 1 ≥ Operand 2,
LT: Operand 1 < Operand 2, LE: Operand 1 ≤ Operand 2

Category	Condition	Command	Operand 1	Operand 2	Output	Function	Page
Variable assignment	Optional	LET	Assignment variable	Assigned value	ZR	Assign	118
	Optional	TRAN	Copy-destination variable	Copy-source variable	ZR	Copy	118
	Optional	CLR	Start-of-clear variable	End-of-clear variable	ZR	Clear variable	119
Arithmetic operation	Optional	ADD	Augend variable	Addend	ZR	Add	120
	Optional	SUB	Minuend variable	Subtrahend	ZR	Subtract	120
	Optional	MULT	Multiplicand variable	Multiplier	ZR	Multiply	121
	Optional	DIV	Dividend variable	Divisor	ZR	Divide	121
	Optional	MOD	Remainder assignment variable	Divisor	ZR	Calculate remainder	122
Function operation	Optional	SIN	Sine assignment variable	Operand [radian]	ZR	Sine	123
	Optional	COS	Cosine assignment variable	Operand [radian]	ZR	Cosine	123
	Optional	TAN	Tangent assignment variable	Operand [radian]	ZR	Tangent	124
	Optional	ATN	Inverse-tangent assignment operation	Operand	ZR	Inverse tangent	124
	Optional	SQR	Root assignment variable	Operand	ZR	Root	125
Logical operation	Optional	AND	AND operand variable	Operand	ZR	Logical AND	126
	Optional	OR	OR operand variable	Operand	ZR	Logical OR	127
	Optional	EOR	Exclusive-OR operand variable	Operand	ZR	Logical exclusive-OR	128
Comparison	Optional	CP□□	Comparison variable	Comparison value	EQ, NE, GT, GE, LT, LE	Compare	129
Timer	Optional	TIMW	Wait time (sec)	Prohibited	TU	Wait	130
	Optional	TIMC	Program number	Prohibited	CP	Cancel waiting	131
	Optional	GTTM	Time assignment variable	Prohibited	CP	Get time	132
I/O, flag operation	Optional	BT□□	Start output, flag	(End output, flag)	CP	Output, flag [ON, OF, NT]	133
	Optional	BTPN	Output port, flag	Timer setting	CP	Output ON pulse	134
	Optional	BTPF	Output port, flag	Timer setting	CP	Output OFF pulse	135
	Optional	WT□□	I/O, flag	(Wait time)	TU	Wait for I/O, flag [ON, OF]	136
	Optional	IN	Head I/O, flag	End I/O, flag	CC	Input binary (32 bits max.)	137
	Optional	INB	Head I/O, flag	Conversion digits	CC	Input BCD (8 digits max.)	138
	Optional	OUT	Head output, flag	End I/O, flag	CC	Output binary (32 bits max.)	139
	Optional	OUTB	Head output, flag	Conversion digits	CC	Output BCD (8 digits max.)	140
	Optional	FMIO	Format type	Prohibited	CP	Set IN (B)/OUT (B) command format	141

Operation type in the output field
CC: Command was executed successfully, ZR: Operation result is zero,
PE: Operation is complete, CP: Command part has passed, TU: Time up
EQ: Operand 1 = Operand 2, NE: Operand 1 ≠ Operand 2,
GT: Operand 1 > Operand 2, GE: Operand 1 ≥ Operand 2,
LT: Operand 1 < Operand 2, LE: Operand 1 ≤ Operand 2

Category	Condition	Command	Operand 1	Operand 2	Output	Function	Page
Program control	Optional	GOTO	Jump-destination tag number	Prohibited	CP	Jump	144
	Prohibited	TAG	Declaration tag number	Prohibited	CP	Declare jump destination	144
	Optional	EXSR	Execution subroutine number	Prohibited	CP	Execute subroutine	145
	Prohibited	BGSR	Declaration subroutine number	Prohibited	CP	Start subroutine	145
	Prohibited	EDSR	Prohibited	Prohibited	CP	End subroutine	146
Task management	Optional	EXIT	Prohibited	Prohibited	CP	End program	147
	Optional	EXPG	Execution program number	(Execution program number)	CC	Start program	148
	Optional	ABPG	Stop program number	(Stop program number)	CC	Stop other program	149
	Optional	SSPG	Pause program number	(Pause program number)	CC	Pause program	150
	Optional	RSPG	Resumption program number	(Resumption program number)	CC	Resume program	151
Position operation	Optional	PGET	Axis number	Position number	CC	Assign position to variable 199	152
	Optional	PPUT	Axis number	Position number	CP	Assign value of variable 199	153
	Optional	PCLR	Start position number	End position number	CP	Clear position data	154
	Optional	PCPY	Copy-destination position number	Copy-source position number	CP	Copy position data	155
	Optional	PRED	Read axis pattern	Save-destination position number	CP	Read current axis position	156
	Optional	PRDQ	Axis number	Variable number	CP	Read current axis position (1 axis direct)	157
	Optional	PTST	Confirmation axis pattern	Confirmation position number	CC	Confirm position data	158
	Optional	PVEL	Speed [mm/sec]	Assignment-destination position number	CP	Assign position speed	159
	Optional	PACC	Acceleration [G]	Assignment-destination position number	CP	Assign position acceleration	160
	Optional	PDCL	Deceleration [G]	Assignment-destination position number	CP	Assign position deceleration	161
	Optional	PAXS	Axis-pattern assignment variable number	Position number	CP	Read axis pattern	162
	Optional	PSIZ	Size assignment variable number		CP	Confirm position size	163
	Optional	GVEL	Variable number	Position number	CP	Get speed data	164
	Optional	GACC	Variable number	Position number	CP	Get acceleration data	165
	Optional	GDCL	Variable number	Position number	CP	Get deceleration data	166
Actuator control declaration	Optional	VEL	Speed [mm/sec]	Prohibited	CP	Set speed	167
	Optional	OVRD	Speed ratio [%]	Prohibited	CP	Set speed coefficient	168
	Optional	ACC	Acceleration [G]	Prohibited	CP	Set acceleration	169
	Optional	DCL	Deceleration [G]	Prohibited	CP	Set deceleration	170
	Optional	SCRV	Ratio [%]	Prohibited	CP	Set sigmoid motion ratio	171
	Optional	OFST	Setting axis pattern	Offset value [mm]	CP	Set offset	172
	Optional	DEG	Division angle [deg]	Prohibited	CP	Set division angle	173
	Optional	BASE	Reference axis number	Prohibited	CP	Set reference axis	174
	Optional	GRP	Valid axis pattern	Prohibited	CP	Set group axes	175
	Optional	HOLD	(Input port to pause)	(HOLD type)	CP	Declare port to pause	176
	Optional	CANC	(Input port to abort)	(CANC type)	CP	Declare port to abort	177
	Optional	VLMX	Prohibited	Prohibited	CP	Specify VLMX speed	178
	Optional	DIS	Distance	Prohibited	CP	Set spline division distance	179
	Optional	POTP	0 or 1	Prohibited	CP	Set PATH output type	180
	Optional	PAPR	Distance	Speed	CP	Set PUSH command distance, speed	181
	Optional	QRTN	0 or 1	Prohibited	CP	Set quick-return mode	182

Operation type in the output field
CC: Command was executed successfully, ZR: Operation result is zero,
PE: Operation is complete, CP: Command part has passed, TU: Time up
EQ: Operand 1 = Operand 2, NE: Operand 1 ≠ Operand 2,
GT: Operand 1 > Operand 2, GE: Operand 1 ≥ Operand 2,
LT: Operand 1 < Operand 2, LE: Operand 1 ≤ Operand 2

Category	Condition	Command	Operand 1	Operand 2	Output	Function	Page
Actuator control command	Optional	SV□□	Operation axis pattern	Prohibited	PE	Servo [ON, OF]	183
	Optional	HOME	Home-return axis pattern	Prohibited	PE	Return to home	184
	Optional	MOVP	Destination position number	Prohibited	PE	Move to specified position	185
	Optional	MOVL	Destination position number	Prohibited	PE	Move to specified position via interpolation	186
	Optional	MVPI	Travel position number	Prohibited	PE	Move to relative position	187
	Optional	MVLI	Travel position number	Prohibited	PE	Move to relative position via interpolation	188
	Optional	PATH	Start position number	End position number	PE	Move along path	189
	Optional	J□W□	Axis operation pattern	Start I/O, flag	PE	Jog [FN, FF, BN, BF]	190
	Optional	STOP	Axis stop pattern	Prohibited	CP	Decelerate and stop axis	191
	Optional	PSPL	Start position number	End position number	PE	Move along spline	192
	Optional	PUSH	Target position number	Prohibited	PE	Move by push motion	193
	Optional	PTRQ	Axis pattern	Ratio [%]	CC	Change push torque limit parameter	195
	Optional	CIR2	Passing position 1 number	Passing position 2 number	PE	Move along circle 2 (arc interpolation)	196
	Optional	ARC2	Passing position number	End position number	PE	Move along arc 2 (arc interpolation)	197
	Optional	CIRS	Passing position 1 number	Passing position 2 number	PE	Move three-dimensionally along circle	198
	Optional	ARCS	Passing position number	Passing position number	PE	Move three-dimensionally along arc	199
	Optional	CHVL	Axis pattern	Speed	CP	Change speed	200
	Optional	ARCD	End position number	Center angle [deg]	PE	Move along arc via specification of end position and center angle	201
	Optional	ARCC	Center position number	Center angle [deg]	PE	Move along arc via specification of center position and center angle	202
	Optional	PBND	Axis pattern	Distance	CP	Set positioning band	203
	Optional	CIR	Passing position 1 number	Passing position 2 number	PE	Move along circle (CIR2 is recommended)	204
	Optional	ARC	Passing position number	End position number	PE	Move along arc (ARC2 is recommended)	205
	Refer to the page on palletizing for commands relating to arch motion.						
	Optional	ARCH	Position number	Position number	PE	Arch motion	258
	Optional	ACHZ	Axis number	Prohibited	CP	Declare arch-motion Z-axis	248
	Optional	ATRG	Position number	Position number	CP	Set arch trigger	249
	Optional	AEXT	(Position number)	Prohibited	CP	Set arch-motion composition	250
	Optional	OFAZ	Offset value	Prohibited	CP	Set arch-motion Z-axis offset	250
Structural IF	Optional	IF□□	Comparison variable	Comparison value	CP	Compare [EQ, NE, GT, GE, LT, LE]	206
	Optional	IS□□	Column number	Column number, character literal	CP	Compare strings	207
	Prohibited	ELSE	Prohibited	Prohibited	CP	Declare execution destination when IF command condition is not satisfied	208
	Prohibited	EDIF	Prohibited	Prohibited	CP	Declare end of IF	208
Structural DO	Optional	DW□□	Comparison variable	Comparison value	CP	Loop [EQ, NE, GT, GE, LT, LE]	209
	Optional	LEAV	Prohibited	Prohibited	CP	Pull out from DO	209
	Optional	ITER	Prohibited	Prohibited	CP	Repeat DO	210
	Prohibited	EDDO	Prohibited	Prohibited	CP	Declare end of DO	210
Multi-branching	Optional	SLCT	Prohibited	Prohibited	CP	Declare start of multi-branching	211
	Prohibited	WH□□	Comparison variable	Comparison value	CP	Branch value [EQ, NE, GT, GE, LT, LE]	212
	Prohibited	WS□□	Column number	Column number, character literal	CP	Branch character string [EQ, NE]	213
	Prohibited	OTHE	Prohibited	Prohibited	CP	Declare branching destination when condition is not satisfied	214
	Prohibited	EDSL	Prohibited	Prohibited	CP	Declare end of SLCT	214

Operation type in the output field
CC: Command was executed successfully, ZR: Operation result is zero,
PE: Operation is complete, CP: Command part has passed, TU: Time up
EQ: Operand 1 = Operand 2, NE: Operand 1 ≠ Operand 2,
GT: Operand 1 > Operand 2, GE: Operand 1 ≥ Operand 2,
LT: Operand 1 < Operand 2, LE: Operand 1 ≤ Operand 2

Category	Condition	Command	Operand 1	Operand 2	Output	Function	Page
System information acquisition	Optional	AXST	Variable number	Axis number	CP	Get axis status	215
	Optional	PGST	Variable number	Program number	CP	Get program status	216
	Optional	SYST	Variable number	Prohibited	CP	Get system status	217
Zone	Optional	WZNA	Zone number	Axis pattern	CP	Wait for zone ON, with AND	218
	Optional	WZNO	Zone number	Axis pattern	CP	Wait for zone ON, with OR	219
	Optional	WZFA	Zone number	Axis pattern	CP	Wait for zone OFF, with AND	220
	Optional	WZFO	Zone number	Axis pattern	CP	Wait for zone OFF, with OR	221
Communication	Optional	OPEN	Channel number	Prohibited	CP	Open channel	222
	Optional	CLOS	Channel number	Prohibited	CP	Close channel	222
	Optional	READ	Channel number	Column number	CC	Read from channel	223
	Optional	TMRW	Read timer setting	(Write timer setting)	CP	Set READ timeout value	225
	Optional	WRIT	Channel number	Column number	CC	Output to channel	226
	Optional	SCHA	Character code	Prohibited	CP	Set end character	227
String operation	Optional	SCPY	Column number	Column number, character literal	CC	Copy character string	228
	Optional	SCMP	Column number	Column number, character literal	EQ	Compare character strings	229
	Optional	SGET	Variable number	Column number, character literal	CP	Get character	230
	Optional	SPUT	Column number	Data	CP	Set character	231
	Optional	STR	Column number	Data	CC	Convert character string; decimal	232
	Optional	STRH	Column number	Data	CC	Convert character string; hexadecimal	233
	Optional	VAL	Variable number	Column number, character literal	CC	Convert character string data; decimal	234
	Optional	VALH	Variable number	Column number, character literal	CC	Convert character string data; hexadecimal	235
	Optional	SLEN	Character string length	Prohibited	CP	Set length	236

Operation type in the output field
CC: Command was executed successfully, ZR: Operation result is zero,
PE: Operation is complete, CP: Command part has passed, TU: Time up
EQ: Operand 1 = Operand 2, NE: Operand 1 ≠ Operand 2,
GT: Operand 1 > Operand 2, GE: Operand 1 ≥ Operand 2,
LT: Operand 1 < Operand 2, LE: Operand 1 ≤ Operand 2

Category	Condition	Command	Operand 1	Operand 2	Output	Function	Page
Palletizing-related	Optional	BGPA	Palletizing number	Prohibited	CP	Declare start of palletizing setting	237
	Prohibited	EDPA	Prohibited	Prohibited	CP	Declare end of palletizing setting	237
	Optional	PAPI	Count	Count	CP	Set palletizing counts	238
	Optional	PAPN	Pattern number	Prohibited	CP	Set palletizing pattern	238
	Optional	PASE	Axis number	Axis number	CP	Set palletizing axes	239
	Optional	PAPT	Pitch	Pitch	CP	Set palletizing pitches	239
	Optional	PAST	(Position number)	Prohibited	CP	Set palletizing reference point	240
	Optional	PAPS	Position number	Prohibited	CP	Set 3 palletizing points for teaching	241
	Optional	PSLI	Offset amount	(Count)	CP	Set zigzag	244
	Optional	PCHZ	(Axis number)	Prohibited	CP	Set palletizing Z-axis	245
	Optional	PTRG	Position number	Position number	CP	Set palletizing arch triggers	246
	Optional	PEXT	(Position number)	Prohibited	CP	Set palletizing composition	247
	Optional	OFPZ	Offset amount	Prohibited	CP	Set palletizing Z-axis offset	247
	Optional	ACHZ	Axis number	Prohibited	CP	Declare arch-motion Z-axis	248
	Optional	ATRG	Position number	Position number	CP	Set arch triggers	249
	Optional	AEXT	(Position number)	Prohibited	CP	Set arch-motion composition	250
	Optional	OFAZ	Offset amount	Prohibited	CP	Set arch-motion Z-axis offset	250
	Optional	PTNG	Palletizing number	Variable number	CP	Get palletizing position number	251
	Optional	PINC	Palletizing number	Prohibited	CC	Increment palletizing position number by 1	251
	Optional	PDEC	Palletizing number	Prohibited	CC	Decrement palletizing position number by 1	252
	Optional	PSET	Palletizing number	Data	CC	Set palletizing position number directly	252
	Optional	PARG	Palletizing number	Axis number	CP	Get palletizing angle	253
	Optional	PAPG	Palletizing number	Position number	CP	Get palletizing calculation data	253
	Optional	PMVP	Palletizing number	(Position number)	PE	Move to palletizing points via PTP	254
	Optional	PMVL	Palletizing number	(Position number)	PE	Move to palletizing points via interpolation	255
	Optional	PACH	Palletizing number	Position number	PE	Palletizing-point arch motion	256
	Optional	ARCH	Position number	Position number	PE	Arch motion	258
Building of pseudo-ladder task	Extension conditions LD (LOAD), A (AND), O (OR), AB (AND BLOCK) and OB (OR BLOCK) are supported.						
	Optional	CHPR	0 or 1	Prohibited	CP	Change task level	260
	Prohibited	TPCD	0 or 1	Prohibited	CP	Specify processing to be performed when input condition is not specified	260
	Prohibited	TSLP	Time	Prohibited	CP	Task sleep	261
	Optional	OUTR	Output, flag number	Prohibited	CP	Output relay for ladder	See 289
	Optional	TIMR	Local flag number	Timer setting	CP	Timer relay for ladder	See 289
Extended commands	Optional	ECMD	1	Axis number	CC	Get motor current value	262
	Optional	ECMD	2	Axis number	CC	Get home sensor status	263
	Optional	ECMD	3	Axis number	CC	Get overrun sensor status	264
	Optional	ECMD	4	Axis number	CC	Get creep sensor status	265
	Optional	ECMD	250	Axis pattern	CC	Set torque limit/“torque limit over” detection time	266

2. Alphabetical Order

Operation type in the output field
CC: Command was executed successfully,
ZR: Operation result is zero, PE: Operation is complete,
CP: Command part has passed, TU: Time up

EQ: Operand 1 = Operand 2, NE: Operand 1 ≠ Operand 2,
GT: Operand 1 > Operand 2, GE: Operand 1 ≥ Operand 2,
LT: Operand 1 < Operand 2, LE: Operand 1 ≤ Operand 2

Command	Page	Condition	Operand 1	Operand 2	Output	Function
A						
ABPG	149	Optional	Stop program number	(Stop program number)	CC	Stop other program
ACC	169	Optional	Acceleration	Prohibited	CP	Set acceleration
ACHZ	248	Optional	Axis number	Prohibited	CP	Declare arch-motion Z-axis
ADD	120	Optional	Augend variable	Addend	ZR	Add
AEXT	250	Optional	(Position number)	Prohibited	CP	Set arch-motion composition
AND	126	Optional	AND operand variable	Operand	ZR	Logical AND
ARC	205	Optional	Passing position number	End position number	PE	Move along arc
ARC2	197	Optional	Passing position number	End position number	PE	Move along arc 2
ARCC	202	Optional	Center position number	Center angle	PE	Move along arc via specification of center position and center angle
ARCD	201	Optional	End position number	Center angle	PE	Move along arc via specification of end position and center angle
ARCH	258	Optional	Position number	Position number	PE	Arch motion
ARCS	199	Optional	Passing position number	Passing position number	PE	Move three-dimensionally along arc
ATN	124	Optional	Inverse-tangent assignment operation	Operand	ZR	Inverse tangent
ATRG	249	Optional	Position number	Position number	CP	Set arch trigger
AXST	215	Optional	Variable number	Axis number	CP	Get axis status
B						
BASE	174	Optional	Reference axis number	Prohibited	CP	Set reference axis
BGPA	237	Optional	Palletizing number	Prohibited	CP	Declare start of palletizing setting
BGSR	145	Prohibited	Declaration subroutine number	Prohibited	CP	Start subroutine
BTPF	135	Optional	Output port, flag	Timer setting	CP	Output OFF pulse
BTPN	134	Optional	Output port, flag	Timer setting	CP	Output ON pulse
BT□□	133	Optional	Start output, flag	(End output, flag)	CP	Output, flag [ON, OF, NT]
C						
CANC	177	Optional	(Input port to abort)	(CANC type)	CP	Declare port to abort
CHPR	260	Optional	0 or 1	Prohibited	CP	Change task level
CHVL	200	Optional	Axis pattern	Speed	CP	Change speed
CIR	204	Optional	Passing position 1 number	Passing position 2 number	PE	Move along circle
CIR2	196	Optional	Passing position 1 number	Passing position 2 number	PE	Move along circle 2
CIRS	198	Optional	Passing position 1 number	Passing position 2 number	PE	Move three-dimensionally along circle
CLOS	222	Optional	Channel number	Prohibited	CP	Close channel
CLR	119	Optional	Start-of-clear variable	End-of-clear variable	ZR	Clear variable
COS	123	Optional	Cosine assignment variable	Operand	ZR	Cosine
CP□□	129	Optional	Comparison variable	Comparison value	EQ NE GT GE LT LE	Compare
D						
DCL	170	Optional	Deceleration	Prohibited	CP	Set deceleration
DEG	173	Optional	Division angle	Prohibited	CP	Set division angle
DIS	179	Optional	Distance	Prohibited	CP	Set spline division distance
DIV	121	Optional	Dividend variable	Divisor	ZR	Divide
DW□□	209	Optional	Comparison variable	Comparison value	CP	Loop [EQ, NE, GT, GE, LT, LE]

Operation type in the output field
CC: Command was executed successfully, ZR: Operation result is zero,
PE: Operation is complete, CP: Command part has passed, TU: Time up
EQ: Operand 1 = Operand 2, NE: Operand 1 ≠ Operand 2,
GT: Operand 1 > Operand 2, GE: Operand 1 ≥ Operand 2,
LT: Operand 1 < Operand 2, LE: Operand 1 ≤ Operand 2

Command	Page	Condition	Operand 1	Operand 2	Output	Function
E						
ECMD	262	Optional	1	Axis number	CC	Get motor current value
ECMD	263	Optional	2	Axis number	CC	Get home sensor status
ECMD	264	Optional	3	Axis number	CC	Get overrun sensor status
ECMD	265	Optional	4	Axis number	CC	Get creep sensor status
ECMD	266	Optional	250	Axis pattern	CC	Set torque limit/“torque limit over” detection time
EDDO	210	Prohibited	Prohibited	Prohibited	CP	Declare end of DO
EDIF	208	Prohibited	Prohibited	Prohibited	CP	Declare end of IF
EDPA	237	Prohibited	Prohibited	Prohibited	CP	Declare end of palletizing setting
EDSL	214	Prohibited	Prohibited	Prohibited	CP	Declare end of SLCT
EDSR	146	Prohibited	Prohibited	Prohibited	CP	End subroutine
ELSE	208	Prohibited	Prohibited	Prohibited	CP	Declare execution destination when IF command condition is not satisfied
EOR	128	Optional	Exclusive-OR operand variable	Operand	ZR	Logical exclusive-OR
EXIT	147	Optional	Prohibited	Prohibited	CP	End program
EXPG	148	Optional	Execution program number	(Execution program number)	CC	Start program
EXSR	145	Optional	Execution subroutine number	Prohibited	CP	Execute subroutine
F						
FMIO	141	Optional	Format type	Prohibited	CP	Set IN (B)/OUT (B) command format
G						
GACC	165	Optional	Variable number	Position number	CP	Get acceleration data
GDCL	166	Optional	Variable number	Position number	CP	Get deceleration data
GOTO	144	Optional	Jump-destination tag number	Prohibited	CP	Jump
GRP	175	Optional	Valid axis pattern	Prohibited	CP	Set group axes
GTTM	132	Optional	Time assignment variable	Prohibited	CP	Get time
GVEL	164	Optional	Variable number	Position number	CP	Get speed data
H						
HOLD	176	Optional	(Input port to pause)	(HOLD type)	CP	Declare port to pause
HOME	184	Optional	Home-return axis pattern	Prohibited	PE	Return to home
I						
IF□□	206	Optional	Comparison variable	Comparison value	CP	Compare [EQ, NE, GT, GE, LT, LE]
INB	138	Optional	Head I/O, flag	Conversion digits	CC	Input BCD (8 digits max.)
IN	137	Optional	Head I/O, flag	End I/O, flag	CC	Input binary (32 bits max.)
IS□□	207	Optional	Column number	Column number, character literal	CP	Compare strings
ITER	210	Optional	Prohibited	Prohibited	CP	Repeat DO
J						
J□W□	190	Optional	Axis operation pattern	Start I/O, flag	PE	Jog [FN, FF, BN, BF]
L209						
LEAV	209	Optional	Prohibited	Prohibited	CP	Pull out from DO
LET	118	Optional	Assignment variable	Assigned value	ZR	Assign

Operation type in the output field
CC: Command was executed successfully, ZR: Operation result is zero,
PE: Operation is complete, CP: Command part has passed, TU: Time up
EQ: Operand 1 = Operand 2, NE: Operand 1 ≠ Operand 2,
GT: Operand 1 > Operand 2, GE: Operand 1 ≥ Operand 2,
LT: Operand 1 < Operand 2, LE: Operand 1 ≤ Operand 2

Command	Page	Condition	Operand 1	Operand 2	Output	Function
M						
MOD	122	Optional	Remainder assignment variable	Divisor	ZR	Calculate remainder
MOVL	186	Optional	Destination position number	Prohibited	PE	Move to specified position via interpolation
MOVP	185	Optional	Destination position number	Prohibited	PE	Move to specified position
MULT	121	Optional	Multiplicand variable	Multiplier	ZR	Multiply
MVLI	188	Optional	Travel position number	Prohibited	PE	Move to relative position via interpolation
MVPI	187	Optional	Travel position number	Prohibited	PE	Move to relative position
O						
OFAZ	250	Optional	Offset amount	Prohibited	CP	Set arch-motion Z-axis offset
OFPZ	247	Optional	Offset amount	Prohibited	CP	Set palletizing Z-axis offset
OFST	172	Optional	Setting axis pattern	Offset value	CP	Set offset
OPEN	222	Optional	Channel number	Prohibited	CP	Open channel
OR	127	Optional	OR operand variable	Operand	ZR	Logical OR
OTHE	214	Prohibited	Prohibited	Prohibited	CP	Declare branching destination when condition is not satisfied
OUT	139	Optional	Head output, flag	End I/O, flag	CC	Output binary (32 bits max.)
OUTB	140	Optional	Head output, flag	Conversion digits	CC	Output BCD (8 digits max.)
OUTR	289	Optional	Output, flag number	Prohibited	CP	Output relay for ladder
OVRD	168	Optional	Speed ratio	Prohibited	CP	Set speed ratio
P						
PACC	160	Optional	Acceleration	Assignment-destination position number	CP	Assign position acceleration
PACH	256	Optional	Palletizing number	Position number	PE	Palletizing-point arch motion
PAPG	253	Optional	Palletizing number	Position number	CP	Get palletizing calculation data
PAPI	238	Optional	Count	Count	CP	Set palletizing counts
PAPN	238	Optional	Pattern number	Prohibited	CP	Set palletizing pattern
PAPR	181	Optional	Distance	Speed	CP	Set PUSH command distance, speed
PAPS	241	Optional	Position number	Prohibited	CP	Set 3 palletizing points for teaching
PAPT	239	Optional	Pitch	Pitch	CP	Set palletizing pitches
PARG	253	Optional	Palletizing number	Axis number	CP	Get palletizing angle
PASE	239	Optional	Axis number	Axis number	CP	Set palletizing axes
PAST	240	Optional	(Position number)	Prohibited	CP	Set palletizing reference point
PATH	189	Optional	Start position number	End position number	PE	Move along path
PAXS	162	Optional	Axis-pattern assignment variable number	Position number	CP	Read axis pattern
PBND	203	Optional	Axis pattern	Distance	CP	Set positioning band
PCHZ	245	Optional	(Axis number)	Prohibited	CP	Set palletizing Z-axis
PCLR	154	Optional	Start position number	End position number	CP	Clear position data
PCPY	155	Optional	Copy-destination position number	Copy-source position number	CP	Copy position data
PDCL	161	Optional	Deceleration	Assignment-destination position number	CP	Assign position deceleration
PDEC	252	Optional	Palletizing number	Prohibited	CC	Decrement palletizing position number by 1
PEXT	247	Optional	(Position number)	Prohibited	CP	Set palletizing composition
PGET	152	Optional	Axis number	Position number	CC	Assign position to variable 199
PGST	216	Optional	Variable number	Program number	CP	Get program status
PINC	251	Optional	Palletizing number	Prohibited	CC	Increment palletizing position number by 1
PMVL	255	Optional	Palletizing number	(Position number)	PE	Move to palletizing points via interpolation
PMVP	254	Optional	Palletizing number	(Position number)	PE	Move to palletizing points via PTP
POTP	180	Optional	0 or 1	Prohibited	CP	Set PATH output type
PPUT	153	Optional	Axis number	Position number	CP	Assign value of variable 199

Operation type in the output field
CC: Command was executed successfully, ZR: Operation result is zero,
PE: Operation is complete, CP: Command part has passed, TU: Time up
EQ: Operand 1 = Operand 2, NE: Operand 1 ≠ Operand 2,
GT: Operand 1 > Operand 2, GE: Operand 1 ≥ Operand 2,
LT: Operand 1 < Operand 2, LE: Operand 1 ≤ Operand 2

Command	Page	Condition	Operand 1	Operand 2	Output	Function
P						
PRDQ	157	Optional	Axis number	Variable number	CP	Read current axis position (1 axis direct)
PRED	156	Optional	Read axis pattern	Save-destination position number	CP	Read current axis position
PSET	252	Optional	Palletizing number	Data	CC	Set palletizing position number directly
PSIZ	163	Optional	Size assignment variable number		CP	Confirm position size
PSLI	244	Optional	Offset amount	(Count)	CP	Set zigzag
PSPL	192	Optional	Start position number	End position number	PE	Move along spline
PTNG	251	Optional	Palletizing number	Variable number	CP	Get palletizing position number
PTRG	246	Optional	Position number	Position number	CP	Set palletizing arch triggers
PTRQ	195	Optional	Axis pattern	Ratio	CC	Change push torque limit parameter
PTST	158	Optional	Confirmation axis pattern	Confirmation position number	CP	Confirm position data
PUSH	193	Optional	Target position number	Prohibited	PE	Move by push motion
PVEL	159	Optional	Speed	Assignment-destination position number	CP	Assign position speed
Q						
QRTN	182	Optional	0 or 1	Prohibited	CP	Set quick-return mode
R						
READ	223	Optional	Channel number	Column number	CC	Read from channel
RSPG	151	Optional	Resumption program number	(Resumption program number)	CC	Resume program
S						
SCHA	227	Optional	Character code	Prohibited	CP	Set end character
SCMP	229	Optional	Column number	Column number, character literal	EQ	Compare character strings
SCPY	228	Optional	Column number	Column number, character literal	CC	Copy character string
SCRV	171	Optional	Ratio	Prohibited	CP	Set sigmoid motion ratio
SGET	230	Optional	Variable number	Column number, character literal	CP	Get character
SIN	123	Optional	Sine assignment variable	Operand	ZR	Sine
SLCT	211	Optional	Prohibited	Prohibited	CP	Declare start of multi-branching
SLEN	236	Optional	Character string length	Prohibited	CP	Set length
SPUT	231	Optional	Column number	Data	CP	Set character
SQR	125	Optional	Root assignment variable	Operand	ZR	Root
SSPG	150	Optional	Pause program number	(Pause program number)	CC	Pause program
STOP	191	Optional	Axis stop pattern	Prohibited	CP	Decelerate and stop axis
STR	232	Optional	Column number	Data	CC	Convert character string; decimal
STRH	233	Optional	Column number	Data	CC	Convert character string; hexadecimal
SUB	120	Optional	Minuend variable	Subtrahend	ZR	Subtract
SV□□	183	Optional	Operation axis pattern	Prohibited	PE	Servo [ON, OF]
SYST	217	Optional	Variable number	Prohibited	CP	Get system status

Operation type in the output field
CC: Command was executed successfully, ZR: Operation result is zero,
PE: Operation is complete, CP: Command part has passed, TU: Time up
EQ: Operand 1 = Operand 2, NE: Operand 1 ≠ Operand 2,
GT: Operand 1 > Operand 2, GE: Operand 1 ≥ Operand 2,
LT: Operand 1 < Operand 2, LE: Operand 1 ≤ Operand 2

Command	Page	Condition	Operand 1	Operand 2	Output	Function
T						
TAG	144	Prohibited	Declaration tag number	Prohibited	CP	Declare jump destination
TAN	124	Optional	Tangent assignment variable	Operand	ZR	Tangent
TIMC	131	Optional	Program number	Prohibited	CP	Cancel waiting
TIMR	289	Optional	Local flag number	Timer setting	CP	Timer relay for ladder
TIMW	130	Optional	Wait time	Prohibited	TU	Wait
TMRW	225	Optional	Read timer setting	(Write timer setting)	CP	Set READ timeout value
TPCD	260	Prohibited	0 or 1	Prohibited	CP	Specify processing to be performed when input condition is not specified
TRAN	118	Optional	Copy-destination variable	Copy-source variable	ZR	Copy
TSLP	261	Prohibited	Time	Prohibited	CP	Task sleep
V						
VAL	234	Optional	Variable number	Column number, character literal	CC	Convert character string data; decimal
VALH	235	Optional	Variable number	Column number, character literal	CC	Convert character string data; hexadecimal
VEL	167	Optional	Speed	Prohibited	CP	Set speed
VLMX	178	Optional	Prohibited	Prohibited	CP	Specify VLMX speed
W						
WH□□	212	Prohibited	Comparison variable	Comparison value	CP	Branch value [EQ, NE, GT, GE, LT, LE]
WRIT	226	Optional	Channel number	Column number	CC	Output to channel
WS□□	213	Prohibited	Column number	Column number, character literal	CP	Branch character string [EQ, NE]
WT□□	136	Optional	I/O, flag	(Wait time)	TU	Wait for I/O, flag [ON, OF]
WZFA	220	Optional	Zone number	Axis pattern	CP	Wait for zone OFF, with AND
WZFO	221	Optional	Zone number	Axis pattern	CP	Wait for zone OFF, with OR
WZNA	218	Optional	Zone number	Axis pattern	CP	Wait for zone ON, with AND
WZNO	219	Optional	Zone number	Axis pattern	CP	Wait for zone ON, with OR

Chapter 2 Explanation of Commands

1. Commands

1.1 Variable Assignment

- LET (Assign)

Extension condition (LD, A, O, AB, OB)	Input condition (I/O, flag)	Command, declaration			Output (Output, flag)
		Command, declaration	Operand 1	Operand 2	
Optional	Optional	LET	Variable number	Data	ZR

[Function] Assign the value specified in operand 2 to the variable specified in operand 1.
The output will turn ON when 0 is assigned to the variable specified in operand 1.

[Example 1]	LET	1	10	Assign 10 to variable 1.
[Example 2]	LET	1	2	Assign 2 to variable 1.
	LET	3	10	Assign 10 to variable 3.
	LET	*1	*3	Assign the content of variable 3 (10) to the variable of the content of variable 1 (variable 2).

- TRAN (Copy)

Extension condition (LD, A, O, AB, OB)	Input condition (I/O, flag)	Command, declaration			Output (Output, flag)
		Command, declaration	Operand 1	Operand 2	
Optional	Optional	TRAN	Variable number	Variable number	ZR

[Function] Assign the content of the variable specified in operand 2 to the variable specified in operand 1.
The output will turn ON when 0 is assigned to the variable specified in operand 1.

[Example 1]	TRAN	1	2	Assign the content of variable 2 to variable 1.
	LET	1	*2	A LET command of the same effect as the above operation
[Example 2]	LET	1	2	Assign 2 to variable 1.
	LET	2	3	Assign 3 to variable 2.
	LET	3	4	Assign 4 to variable 3.
	LET	4	10	Assign 10 to variable 4.
	TRAN	*1	*3	Assign the content of variable 3 (which is variable 4, or 10) to the variable of the content of variable 1 (variable 2).

The variables change as follows:

1	2	3	4	→	1	2	3	4
2	3	4	10		2	10	4	10

- CLR (Clear variable)

Extension condition (LD, A, O, AB, OB)	Input condition (I/O, flag)	Command, declaration			Output (Output, flag)
		Command, declaration	Operand 1	Operand 2	
Optional	Optional	CLR	Variable number	Variable number	ZR

[Function] Clear the variables from the one specified in operand 1 through the other specified in operand 2.
The contents of the variables that have been cleared become 0.
The output will turn ON when 0 is assigned to the variable specified in operand 1.

[Example 1]	CLR	1	5	Clear variables 1 through 5.
[Example 2]	LET	1	10	Assign 10 to variable 1.
	LET	2	20	Assign 20 to variable 2.
	CLR	*1	*2	Clear the variables from the content of variable 1 (variable 10) through the content of variable 2 (variable 20).

1.2 Arithmetic Operation

- ADD (Add)

Extension condition (LD, A, O, AB, OB)	Input condition (I/O, flag)	Command, declaration			Output (Output, flag)
		Command, declaration	Operand 1	Operand 2	
Optional	Optional	ADD	Variable number	Data	ZR

[Function] Add the content of the variable specified in operand 1 and the value specified in operand 2, and assign the result to the variable specified in operand 1.
The output will turn ON when the operation result becomes 0.

[Example 1]

LET	1	3	Assign 3 to variable 1.
ADD	1	2	Add 2 to the content of variable 1 (3). 5 (3+2=5) will be stored in variable 1.

[Example 2]

LET	1	2	Assign 2 to variable 1.
LET	2	3	Assign 3 to variable 2.
LET	3	2	Assign 2 to variable 3.
ADD	*1	*3	Add the content of variable 3 (2) to the content of variable 1 (variable 2). 5 (3+2=5) will be stored in variable 2.

- SUB (Subtract)

Extension condition (LD, A, O, AB, OB)	Input condition (I/O, flag)	Command, declaration			Output (Output, flag)
		Command, declaration	Operand 1	Operand 2	
Optional	Optional	SUB	Variable number	Data	ZR

[Function] Subtract the value specified in operand 2 from the content of the variable specified in operand 1, and assign the result to the variable specified in operand 1.
The output will turn ON when the operation result becomes 0.

[Example 1]

LET	1	3	Assign 3 to variable 1.
SUB	1	2	Subtract 2 from the content of variable 1 (3). 1 (3–2=1) will be stored in variable 1.

[Example 2]

LET	1	2	Assign 2 to variable 1.
LET	2	3	Assign 3 to variable 2.
LET	3	2	Assign 2 to variable 3.
SUB	*1	*3	Subtract the content of variable 3 (2) from the content of variable 1 (variable 2). 1 (3–2=1) will be stored in variable 2.

- MULT (Multiply)

Extension condition (LD, A, O, AB, OB)	Input condition (I/O, flag)	Command, declaration			Output (Output, flag)
		Command, declaration	Operand 1	Operand 2	
Optional	Optional	MULT	Variable number	Data	ZR

[Function] Multiply the content of the variable specified in operand 1 by the value specified in operand 2, and assign the result to the variable specified in operand 1.
The output will turn ON when the operation result becomes 0.

[Example 1]

```
LET   1   3   Assign 3 to variable 1.
MULT  1   2   Multiply the content of variable 1 (3) by 2.
              6 (3x2=6) will be stored in variable 1.
```

[Example 2]

```
LET   1   2   Assign 2 to variable 1.
LET   2   3   Assign 3 to variable 2.
LET   3   2   Assign 2 to variable 3.
MULT  *1  *3  Multiply the content of variable 1 (variable 2) by
              the content of variable 3 (2).
              6 (3x2=6) will be stored in variable 2.
```

- DIV (Divide)

Extension condition (LD, A, O, AB, OB)	Input condition (I/O, flag)	Command, declaration			Output (Output, flag)
		Command, declaration	Operand 1	Operand 2	
Optional	Optional	DIV	Variable number	Data	ZR

[Function] Divide the content of the variable specified in operand 1 by the value specified in operand 2, and assign the result to the variable specified in operand 1.
The output will turn ON when the operation result becomes 0.

(Note) If the variable specified in operand 1 is an integer variable, any decimal places will be rounded off.

[Example 1]

```
LET   1   6   Assign 6 to variable 1.
DIV   1   2   Divide the content of variable 1 (6) by 2.
              3 (6÷2=3) will be stored in variable 1.
```

[Example 2]

```
LET   1   2   Assign 2 to variable 1.
LET   2   6   Assign 6 to variable 2.
LET   3   2   Assign 2 to variable 3.
DIV   *1  *3  Divide the content of variable 1 (variable 2) by the
              content of variable 3 (2).
              3 (6÷2=3) will be stored in variable 2.
```

- MOD (Remainder of division)

Extension condition (LD, A, O, AB, OB)	Input condition (I/O, flag)	Command, declaration			Output (Output, flag)
		Command, declaration	Operand 1	Operand 2	
Optional	Optional	MOD	Variable number	Data	ZR

[Function] Assign, to the variable specified in 1, the remainder obtained by dividing the content of the variable specified in operand 1 by the value specified in operand 2.
The output will turn ON when the operation result becomes 0.

(Note) A MOD command is used with integer variables.

[Example 1]

LET	1	7	Assign 7 to variable 1.
MOD	1	3	Obtain the remainder of dividing the content of variable 1 (7) by 3. 1 (7÷3=2 with a remainder of 1) will be assigned to variable 1.

[Example 2]

LET	1	2	Assign 2 to variable 1.
LET	2	7	Assign 7 to variable 2.
LET	3	3	Assign 3 to variable 3.
MOD	*1	*3	Obtain the remainder of dividing the content of variable 1 (variable 2) by the content of variable 3 (3). 1 (7÷3=2 with a remainder of 1) will be assigned to variable 2.

1.3 Function Operation

- SIN (Sine operation)

Extension condition (LD, A, O, AB, OB)	Input condition (I/O, flag)	Command, declaration			Output (Output, flag)
		Command, declaration	Operand 1	Operand 2	
Optional	Optional	SIN	Variable number	Data	ZR

[Function] Assign the sine of the data specified in operand 2 to the variable specified in operand 1.
The output will turn ON when the operation result becomes 0.
The setting in operand 1 must be a real variable in a range of 100 to 199, 1100 to 1199, 300 to 399 or 1300 to 1399.
The unit of data in operand 2 is radian.

(Note 1) Radian = Angle x π ÷ 180

[Example 1]

```
SIN   100   0.523599
```

Assign the sine of 0.523599 (0.5) to variable 100.

[Example 2]

```
LET   1     100
LET   101   30
MULT  101   3.141592
DIV   101   180
SIN   *1    *101
```

Assign 100 to variable 1.
30 x π ÷ 180 (radian)
(30° will be converted to radian and assigned to variable 101.)
Assign the sine of the content of variable 101 (0.5) to the content of variable 1 (variable 100).

- COS (Cosine operation)

Extension condition (LD, A, O, AB, OB)	Input condition (I/O, flag)	Command, declaration			Output (Output, flag)
		Command, declaration	Operand 1	Operand 2	
Optional	Optional	COS	Variable number	Data	ZR

[Function] Assign the cosine of the data specified in operand 2 to the variable specified in operand 1.
The output will turn ON when the operation result becomes 0.
The setting in operand 1 must be a real variable in a range of 100 to 199, 1100 to 1199, 300 to 399 or 1300 to 1399.
The unit of data in operand 2 is radian.

(Note 1) Radian = Angle x π ÷ 180

[Example 1]

```
COS   100   1.047197
```

Assign the cosine of 1.047197 (0.5) to variable 100.

[Example 2]

```
LET   1     100
LET   101   60
MULT  101   3.141592
DIV   101   180
COS   *1    *101
```

Assign 100 to variable 1.
60 x π ÷ 180 (radian)
(60° will be converted to radian and assigned to variable 101.)
Assign the cosine of the content of variable 101 (0.5) to the content of variable 1 (variable 100).

● TAN (Tangent operation)

Extension condition (LD, A, O, AB, OB)	Input condition (I/O, flag)	Command, declaration			Output (Output, flag)
		Command, declaration	Operand 1	Operand 2	
Optional	Optional	TAN	Variable number	Data	ZR

[Function] Assign the tangent of the data specified in operand 2 to the variable specified in operand 1.
The output will turn ON when the operation result becomes 0.
The setting in operand 1 must be a real variable in a range of 100 to 199, 1100 to 1199, 300 to 399 or 1300 to 1399.
The unit of data in operand 2 is radian.

(Note 1) Radian = Angle x π ÷ 180

[Example 1]

```
TAN   100   0.785398
```

Assign the tangent of 0.785398 (1) to variable 100.

[Example 2]

```
LET   1     100
LET   101   45
MULT  101   3.141592
DIV   101   180
TAN   *1    *101
```

Assign 100 to variable 1.
45 x π ÷ 180 (radian)
(45° will be converted to radian and assigned to variable 101.)
Assign the tangent of the content of variable 101 (1) to the content of variable 1 (variable 100).

● ATN (Inverse-tangent operation)

Extension condition (LD, A, O, AB, OB)	Input condition (I/O, flag)	Command, declaration			Output (Output, flag)
		Command, declaration	Operand 1	Operand 2	
Optional	Optional	ATN	Variable number	Data	ZR

[Function] Assign the inverse tangent of the data specified in operand 2 to the variable specified in operand 1.
The output will turn ON when the operation result becomes 0.
The setting in operand 1 must be a real variable in a range of 100 to 199, 1100 to 1199, 300 to 399 or 1300 to 1399.
The unit of inverse tangent is radian.

(Note 1) Radian = Angle x π ÷ 180

[Example 1]

```
ATN   100   1
```

Assign the inverse tangent of 1 (0.785398) to variable 100.

[Example 2]

```
LET   1     100
LET   101   1
ATN   *1    *101
```

Assign 100 to variable 1.
Assign 1 to variable 101.
Assign the inverse tangent of the content of variable 101 (0.785398) to the content of variable 1 (variable 100).

- SQR (Root operation)

Extension condition (LD, A, O, AB, OB)	Input condition (I/O, flag)	Command, declaration			Output (Output, flag)
		Command, declaration	Operand 1	Operand 2	
Optional	Optional	SQR	Variable number	Data	ZR

[Function] Assign the root of the data specified in operand 2 to the variable specified in operand 1. The output will turn ON when the operation result becomes 0.

[Example 1]	SQR	1	4	Assign the root of 4 (2) to variable 1.
[Example 2]	LET	1	10	Assign 10 to variable 1.
	LET	2	4	Assign 4 to variable 2.
	SQR	*1	*2	Assign the root of the content of variable 2 (4) to the content of variable 1 (variable 10).

1.4 Logical Operation

- AND (Logical AND)

Extension condition (LD, A, O, AB, OB)	Input condition (I/O, flag)	Command, declaration			Output (Output, flag)
		Command, declaration	Operand 1	Operand 2	
Optional	Optional	AND	Variable number	Data	ZR

[Function] Assign the logical AND operation result of the content of the variable specified in operand 1 and the value specified in operand 2, to the variable specified in operand 1.
The output will turn ON when the operation result becomes 0.

[Example 1]

LET	1	204	Assign 204 to variable 1.
AND	1	170	Assign the logical AND operation result (136) of the content of variable 1 (204) and 170, to variable 1.

[Example 2]

LET	1	2	Assign 2 to variable 1.
LET	2	204	Assign 204 to variable 2.
LET	3	170	Assign 170 to variable 3.
AND	*1	*3	Assign the logical AND operation result (136) of the content of variable 1 (which is variable 2, or 204) and the content of variable 3 (170), to the content of variable 1 (variable 2).

	Decimal		Binary
	204		11001100
AND	170	AND	10101010
	136		10001000

- OR (Logical OR)

Extension condition (LD, A, O, AB, OB)	Input condition (I/O, flag)	Command, declaration			Output (Output, flag)
		Command, declaration	Operand 1	Operand 2	
Optional	Optional	OR	Variable number	Data	ZR

[Function] Assign the logical OR operation result of the content of the variable specified in operand 1 and the value specified in operand 2, to the variable specified in operand 1.
The output will turn ON when the operation result becomes 0.

[Example 1]

LET	1	204	Assign 204 to variable 1.
OR	1	170	Assign the logical OR operation result (238) of the content of variable 1 (204) and 170, to variable 1.

[Example 2]

LET	1	2	Assign 2 to variable 1.
LET	2	204	Assign 204 to variable 2.
LET	3	170	Assign 170 to variable 3.
OR	*1	*3	Assign the logical OR operation result (238) of the content of variable 1 (which is variable 2, or 204) and the content of variable 3 (170), to the content of variable 1 (variable 2).

Decimal	Binary
204	11001100
OR 170	OR 10101010
238	11101110

- EOR (Logical exclusive-OR)

Extension condition (LD, A, O, AB, OB)	Input condition (I/O, flag)	Command, declaration			Output (Output, flag)
		Command, declaration	Operand 1	Operand 2	
Optional	Optional	EOR	Variable number	Data	ZR

[Function] Assign the logical exclusive-OR operation result of the content of the variable specified in operand 1 and the value specified in operand 2, to the variable specified in operand 1. The output will turn ON when the operation result becomes 0.

[Example 1]

LET	1	204	Assign 204 to variable 1.
EOR	1	170	Assign the logical exclusive-OR operation result (102) of the content of variable 1 (204) and 170, to variable 1.

[Example 2]

LET	1	2	Assign 2 to variable 1.
LET	2	204	Assign 204 to variable 2.
LET	3	170	Assign 170 to variable 3.
EOR	*1	*3	Assign the logical exclusive-OR operation result (102) of the content of variable 1 (which is variable 2, or 204) and the content of variable 3 (170), to the content of variable 1 (variable 2).

	Decimal	Binary
	204	11001100
EOR	170	EOR 10101010
	102	01100110

1.5 Comparison Operation

- CP□□ (Compare)

Extension condition (LD, A, O, AB, OB)	Input condition (I/O, flag)	Command, declaration			Output (Output, flag)
		Command, declaration	Operand 1	Operand 2	
Optional	Optional	CP□□	Variable number	Data	EQ NE GT GE LT LE

[Function] The output will be turned ON if the comparison result of the content of the variable specified in operand 1 and the value specified in operand 2 satisfies the condition.
The value in the variable does not change.
The output will be turned OFF if the condition is not satisfied.

(Note) The output will not be turned OFF when the command is executed.

CP□□
- EQ ..... Operand 1 = Operand 2
- NE ..... Operand 1 ≠ Operand 2
- GT ..... Operand 1 > Operand 2
- GE ..... Operand 1 ≥ Operand 2
- LT ..... Operand 1 < Operand 2
- LE ..... Operand 1 ≤ Operand 2

[Example 1]

	LET	1	10		Assign 10 to variable 1.
	CPEQ	1	10	600	Turn ON flag 600 if the content of variable 1 is 10.
600	ADD	2	1		Add 1 to variable 2 if flag 600 is ON.

[Example 2]

LET	1	2		Assign 2 to variable 1.
LET	2	10		Assign 10 to variable 2.
LET	3	10		Assign 10 to variable 3.
CPEQ	*1	*3	310	Turn ON output 310 if the content of variable 1 (variable 2) is equal to the content of variable 3.

1.6 Timer

- TIMW (Timer)

Extension condition (LD, A, O, AB, OB)	Input condition (I/O, flag)	Command, declaration			Output (Output, flag)
		Command, declaration	Operand 1	Operand 2	
Optional	Optional	TIMW	Time	Prohibited	TU

[Function] Stop the program and wait for the time specified in operand 1.
The setting range is 0.01 to 99, and the unit is second.
The output will turn ON when the specified time has elapsed and the program proceeds to the next step.

```
[Example 1]   TIMW   1.5              Wait for 1.5 seconds.

[Example 2]   LET    1    10          Assign 10 to variable 1.
              TIMW   *1               Wait for the content of variable 1 (10 seconds).
```

- TIMC (Cancel timer)

Extension condition (LD, A, O, AB, OB)	Input condition (I/O, flag)	Command, declaration			Output (Output, flag)
		Command, declaration	Operand 1	Operand 2	
Optional	Optional	TIMC	Program number	Prohibited	CP

[Function] Cancel a timer in other program running in parallel.

(Note) Timers in TIMW, WTON, WTOF and READ commands can be cancelled. In the case of WTON, WTOF and READ commands, even if timeout is not specified it is assumed that an unlimited timer has been specified and the wait time will be cancelled.

[Example 1]

```
TIMC    10                  Cancel the wait time in program 10.
```

[Example 2]

```
LET     1     10            Assign 10 to variable 1.
TIMC    *1                  Cancel the wait time in the content of variable 1
                            (program 10).
```

[Example 3]

```
Program 1                   Program 10

   :                           :
   :                        WTON 8 20      Program 10 waits for input 8 for 20 seconds.
   :                        (Wait for input 8)
TIMC    10                  (Wait for input 8)  Cancel the wait time in program 10.
   :                           :
```

(Note) The steps shown in the above example represent those executed simultaneously in different programs.

- GTTM (Get time)

Extension condition (LD, A, O, AB, OB)	Input condition (I/O, flag)	Command, declaration			Output (Output, flag)
		Command, declaration	Operand 1	Operand 2	
Optional	Optional	GTTM	Variable number	Prohibited	CP

[Function] Read system time to the variable specified in operand 1. The time is specified in units of 10 milliseconds.
The time obtained here has no base number. Therefore, this command is called twice and the difference will be used to calculate the elapsed time.

[Example 1]

```
GTTM   1          Read the reference time to variable 1.
ADD    1   500    Set the ending time to 5 seconds later.
GTTM   2          Read the current system time to variable 2.
DWLE   2   *1     Proceed to the step next to EDDO when 5 seconds elapsed.
  :               The above process will be repeated for 5 seconds.
  :
GTTM   2          Read the current system time to variable 2.
EDDO
```

[Example 2]

```
LET    1   5      Assign 5 to variable 1.
GTTM   *1         Store the current system time in the content of variable 1
                  (variable 5).
```

1.7 I/O, Flag Operation

- BT□□ (Output port, flag operation)

Extension condition (LD, A, O, AB, OB)	Input condition (I/O, flag)	Command, declaration			Output (Output, flag)
		Command, declaration	Operand 1	Operand 2	
Optional	Optional	BT□□	Output, flag	(Output, flag)	CP

[Function] Reverse the ON/OFF status of the output ports or flags from the one specified in operand 1 through the other specified in operand 2.

BT□□
- ON ..... Switch the status to ON.
- OF ..... Switch the status to OFF.
- NT ..... Reverse the status.

[Example 1]	BTON	300		Turn ON output port 300.
[Example 2]	BTOF	300	307	Turn OFF output ports 300 through 307.
[Example 3]	LET	1	600	Assign 600 to variable 1.
	BTNT	*1		Reverse the content of variable 1 (flag 600).
[Example 4]	LET	1	600	Assign 600 to variable 1.
	LET	2	607	Assign 607 to variable 2.
	BTON	*1	*2	Turn ON the flags from the content of variable 1 (flag 600) through the content of variable 2 (flag 607).

- BTPN (Output ON pulse)

Extension condition (LD, A, O, AB, OB)	Input condition (I/O, flag)	Command, declaration			Output (Output, flag)
		Command, declaration	Operand 1	Operand 2	
Optional	Optional	BTPN	Output port, flag	Timer setting	CP

[Function] Turn ON the specified output port or flag for the specified time.
When this command is executed, the output port or flag specified in operand 1 will be turned ON and then the program will proceed to the next step. The output port or flag will be turned OFF automatically upon elapse of the timer setting specified in operand 2.
The timer is set in a range from 0.01 to 99.00 seconds (including up to two decimal places).

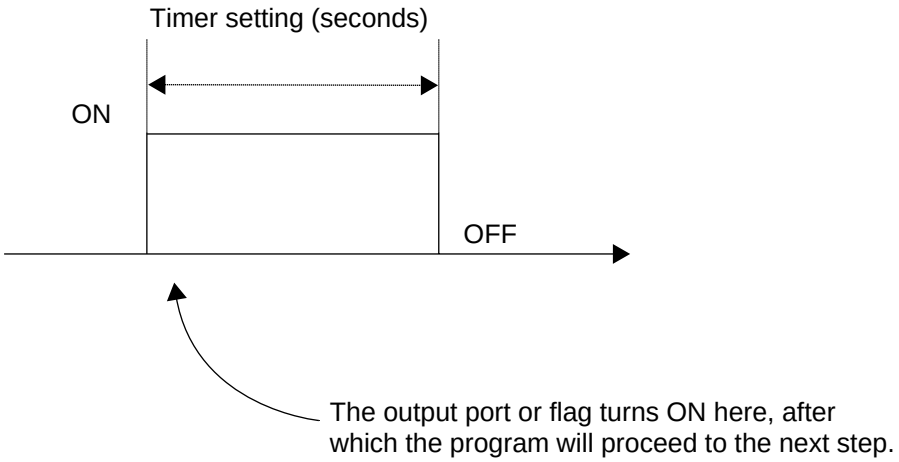

(Note 1) If this command is executed with respect to an output port or flag already ON, the output port or flag will be turned OFF upon elapse of the timer setting.

(Note 2) If the program ends after the command has been executed but before the timer is up, the output port or flag will not be turned OFF.

(Note 3) This command will not be cancelled by a TIMC command.

(Note 4) A maximum of 16 timers, including BTPN and BTPF, can be operated simultaneously in a single program. (There is no limitation as to how many times these timers can be used in a single program.)

(Note 5) If other task or interruption process cuts in after the port was turned ON and before it is turned OFF again, an error will occur in the pulse output time. Accordingly, this command cannot be used to output an ON pulse over a specified time.

[Example]

```
BTPN    300    1     Turn ON output port 300 for 1 second.
BTPN    600    10    Turn ON flag 600 for 10 seconds.
```

- BTPF (Output OFF pulse)

Extension condition (LD, A, O, AB, OB)	Input condition (I/O, flag)	Command, declaration			Output (Output, flag)
		Command, declaration	Operand 1	Operand 2	
Optional	Optional	BTPF	Output port, flag	Timer setting	CP

[Function] Turn OFF the specified output port or flag for the specified time.
When this command is executed, the output port or flag specified in operand 1 will be turned OFF and then the program will proceed to the next step. The output port or flag will be turned ON automatically upon elapse of the timer setting specified in operand 2.
The timer is set in a range from 0.01 to 99.00 seconds (including up to two decimal places).

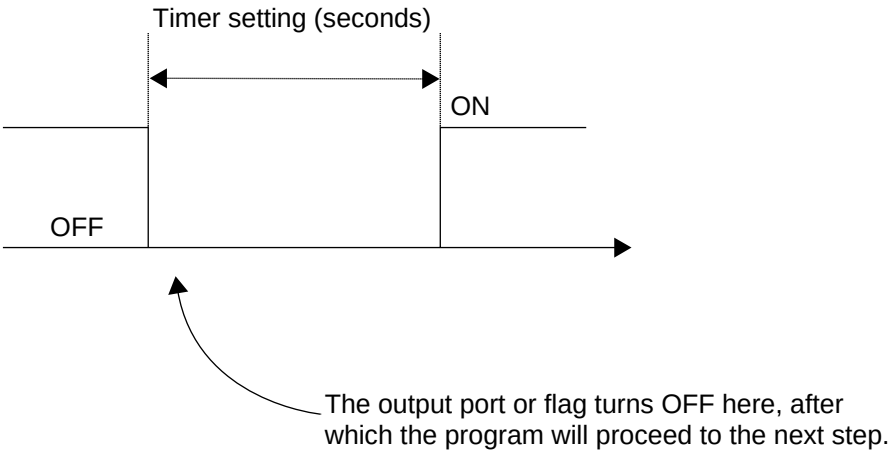

(Note 1) If this command is executed with respect to an output port or flag already OFF, the output port or flag will be turned ON upon elapse of the timer setting.

(Note 2) If the program ends after the command has been executed but before the timer is up, the output port or flag will not be turned ON.

(Note 3) This command will not be cancelled by a TIMC command.

(Note 4) A maximum of 16 timers, including BTPN and BTPF, can be operated simultaneously in a single program. (There is no limitation as to how many times these timers can be used in a single program.)

(Note 5) If other task or interruption process cuts in after the port was turned ON and before it is turned OFF again, an error will occur in the pulse output time. Accordingly, this command cannot be used to output an ON pulse over a specified time.

[Example]

```
BTPF    300     1       Turn OFF output port 300 for 1 second.
BTPF    600     10      Turn OFF flag 600 for 10 seconds.
```

- WT□□ (Wait for I/O port, flag)

Extension condition (LD, A, O, AB, OB)	Input condition (I/O, flag)	Command, declaration			Output (Output, flag)
		Command, declaration	Operand 1	Operand 2	
Optional	Optional	WT□□	I/O, flag	(Time)	TU

[Function] Wait for the I/O port or flag specified in operand 1 to turn ON/OFF.
The program can be aborted after the specified time by setting the time in operand 2.
The setting range is 0.01 to 99 seconds.
The output will turn ON upon elapse of the specified time (only when operand 2 is specified).
Note) A local flag cannot be entered in operand 1.

WT□□
- ON ..... Wait for the applicable I/O port or flag to turn ON.
- OF ..... Wait for the applicable I/O port or flag to turn OFF.

[Example 1]	WTON	15		Wait for input port 15 to turn ON.
[Example 2]	WTOF	308	10	Wait for 10 seconds for output port 308 to turn OFF.
[Example 3]	LET	1	600	Assign 600 to variable 1.
	WTON	*1		Wait for the content of variable 1 (flag 600) to turn ON.
[Example 4]	LET	1	8	Assign 8 to variable 1.
	LET	2	5	Assign 5 to variable 2.
	WTOF	*1	*2	Wait for the content of variable 2 (5 seconds) for the content of variable 1 (input port 8) to turn OFF.

- IN (Read I/O, flag as binary)

Extension condition (LD, A, O, AB, OB)	Input condition (I/O, flag)	Command, declaration			Output (Output, flag)
		Command, declaration	Operand 1	Operand 2	
Optional	Optional	IN	I/O, flag	I/O, flag	CC

[Function] Read the I/O ports or flags from the one specified in operand 1 through the other specified in operand 2, to variable 99 as a binary.

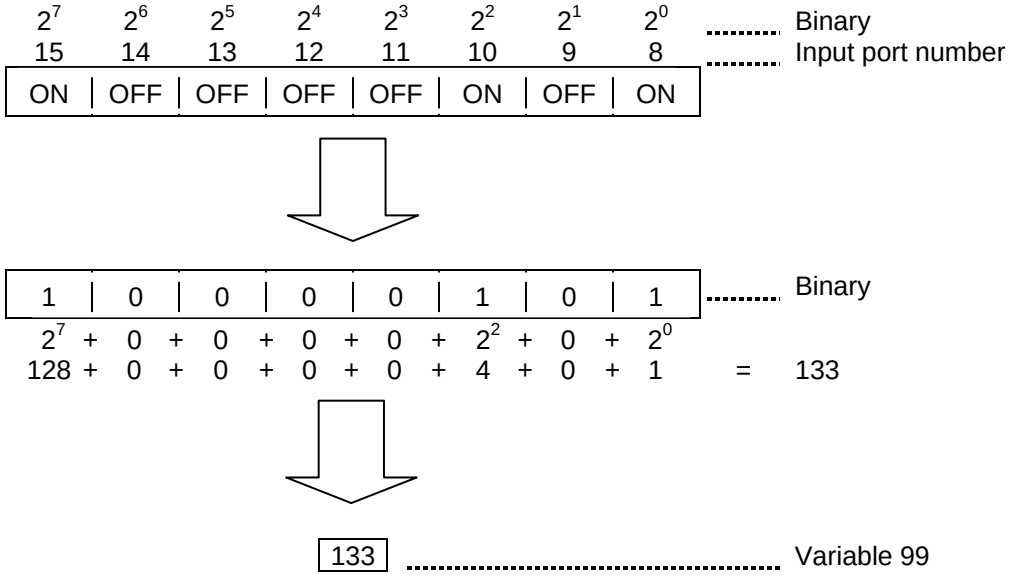

(Note 1) A maximum of 32 bits can be input.

(Note 2) When 32 bits have been input and the most significant bit is ON, the value read to variable 99 will be treated as a negative value.

(Note 3) The read data format can be changed using a FMIO command (refer to the section on FMIO command).

[Example 1]

IN	8	15	Read input ports 8 through 15, to variable 99 as a binary.

[Example 2]

LET	1	8	Assign 8 to variable 1.
LET	2	15	Assign 15 to variable 2.
IN	*1	*2	Read the input ports from the content of variable 1 (input port 8) through the content of variable 2 (input port 15), to variable 99 as a binary.

- INB (Read I/O, flag as BCD)

Extension condition (LD, A, O, AB, OB)	Input condition (I/O, flag)	Command, declaration			Output (Output, flag)
		Command, declaration	Operand 1	Operand 2	
Optional	Optional	INB	I/O, flag	BCD digits	CC

[Function] Read the I/O ports or flags from the one specified in operand 1 for the number of digits specified in operand 2, to variable 99 as a BCD.

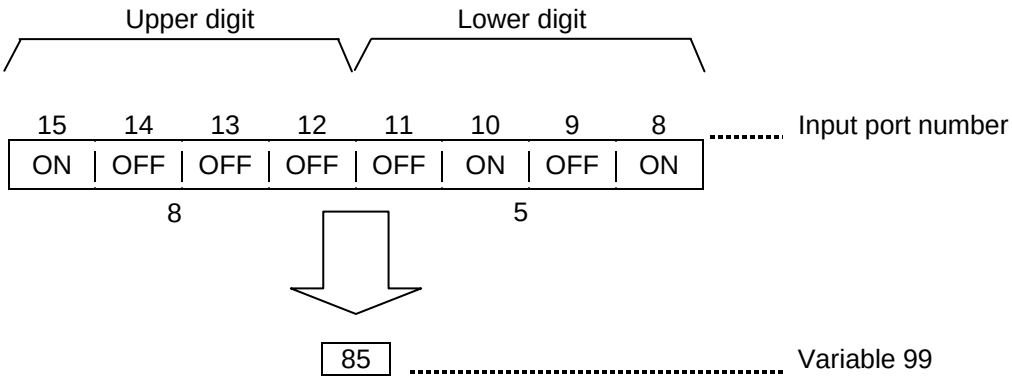

(Note 1) A maximum of eight digits (32 bits) can be input.

(Note 2) The number of I/O ports and flags that can be used is 4 x n (digits).

(Note 3) The read data format can be changed using a FMIO command (refer to the section on FMIO command).

[Example 1]

INB	8	2	Read input ports 8 through 15, to variable 99 as a BCD.

[Example 2]

LET	1	8	Assign 8 to variable 1.
LET	2	2	Assign 2 to variable 2.
INB	*1	*2	Read the input ports from the content of variable 1 (input port 8) for the content of variable 2 (two digits) (until input port 15), to variable 99 as a BCD.

- OUT (Write output, flag as binary)

Extension condition (LD, A, O, AB, OB)	Input condition (I/O, flag)	Command, declaration			Output (Output, flag)
		Command, declaration	Operand 1	Operand 2	
Optional	Optional	OUT	Output, flag	Output, flag	CC

[Function] Write the value in variable 99 to the output ports or flags from the one specified in operand 1 through the other specified in operand 2.

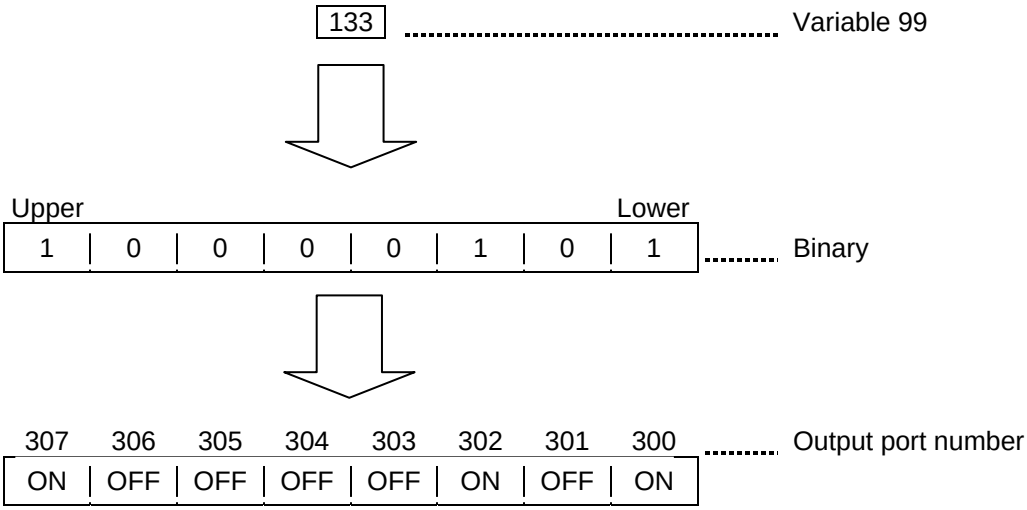

(Note 1) A maximum of 32 bits can be output.

(Note 2) The write data format can be changed using a FMIO command (refer to the section on FMIO command).

[Example 1]	OUT	300	307	Write the value in variable 99 to output ports 300 through 307 as a binary.
[Example 2]	LET	1	300	Assign 300 to variable 1.
	LET	2	307	Assign 307 to variable 2.
	OUT	*1	*2	Write the value in variable 99 to the output ports from the content of variable 1 (output port 300) through the content of variable 2 (output port 307) as a binary.

- OUTB (Write output, flag as BCD)

Extension condition (LD, A, O, AB, OB)	Input condition (I/O, flag)	Command, declaration			Output (Output, flag)
		Command, declaration	Operand 1	Operand 2	
Optional	Optional	OUTB	Output, flag	BCD digits	CC

[Function] Write the value in variable 99 to the output ports or flags from the one specified in operand 1 for the number of digits specified in operand 2 as a BCD.

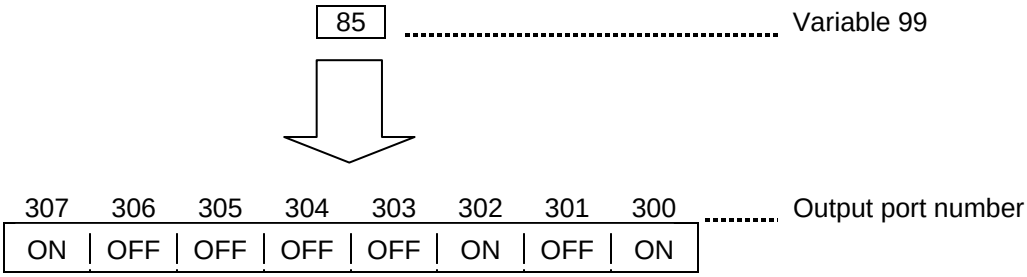

(Note 1) A maximum of eight digits (32 bits) can be output.

(Note 2) The number of output ports and flags that can be used is 4 x n (digits).

(Note 3) The write data format can be changed using a FMIO command (refer to the section on FMIO command).

[Example 1]

```
OUTB    300     2
```

Write the value in variable 99 to the output ports from 300 for two digits (until output port 307) as a BCD.

[Example 2]

```
LET     1       300
LET     2       2
OUTB    *1      *2
```

Assign 300 to variable 1.
Assign 2 to variable 2.
Write the value in variable 99 to the output ports from the content of variable 1 (output port 300) for the content of variable 2 (two digits) (until output port 307) as a BCD.

- FMIO (Set IN, INB, OUT, OUTB command format)

Extension condition (LD, A, O, AB, OB)	Input condition (I/O, flag)	Command, declaration			Output (Output, flag)
		Command, declaration	Operand 1	Operand 2	
Optional	Optional	FMIO	Format type	Prohibited	CP

[Function] Set the data format for reading or writing I/O ports and flags with an IN, INB, OUT or OUTB command.

(1) Operand 1 = 0 (Default status when a FMIO command has not been executed)
Data is read or written without being reversed.

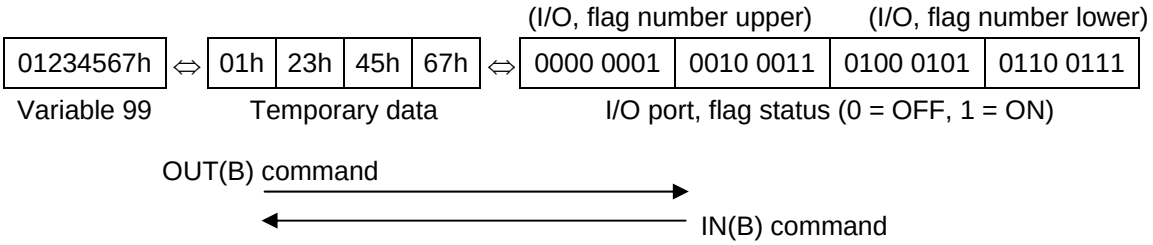

(2) Operand 1 = 1
Data is read or written after its upper eight bits and lower eight bits are reversed every 16 bits.

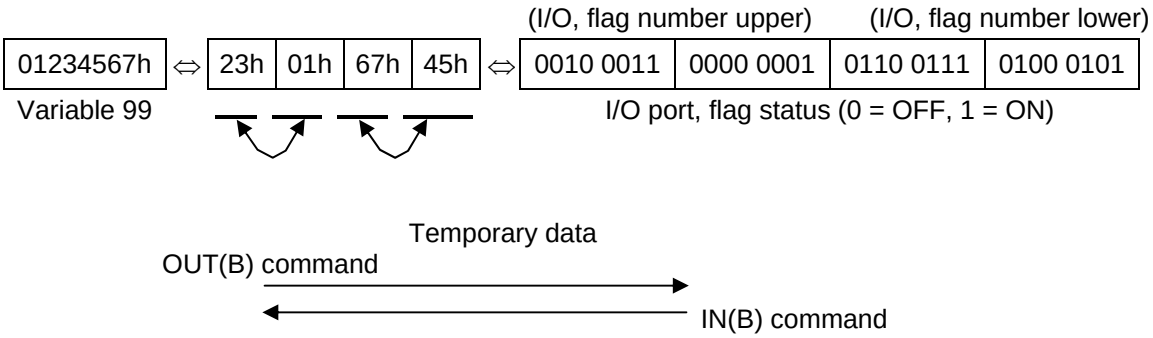

(3) Operand 1 = 2
Data is read or written after its upper 16 bits and lower 16 bits are reversed every 32 bits.

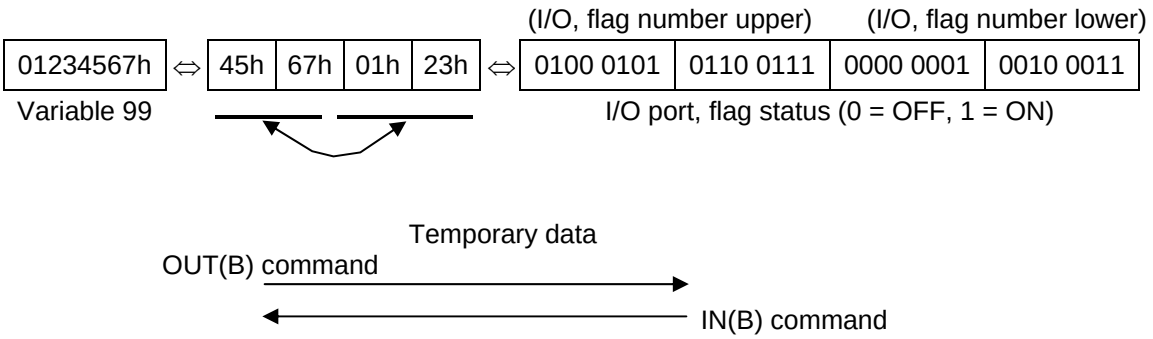

(4) Operand 1 = 3
Data is read or written after its upper 16 bits and lower 16 bits are reversed every 32 bits and its upper eight bits and lower eight bits are reversed every 16 bits.

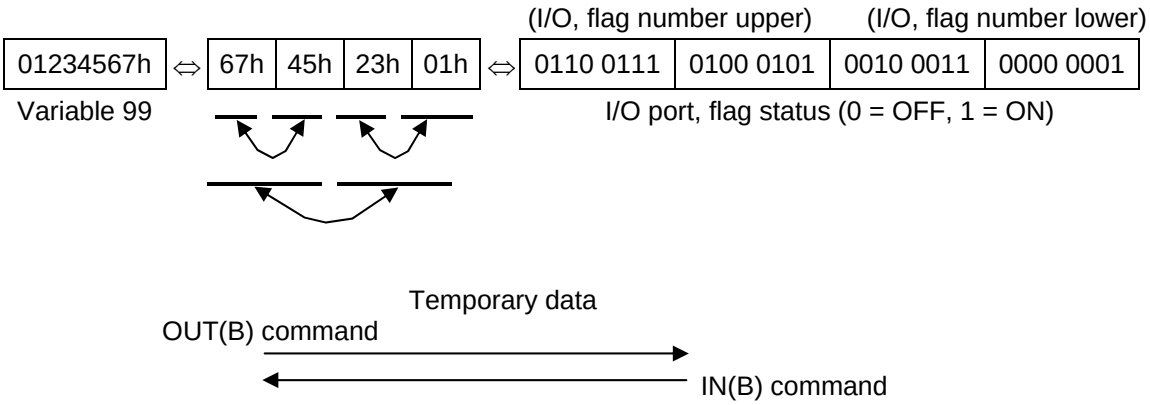

(Note) FMIO command is supported in PC software version 2.0.45 or later and teaching pendant version 1.13 or later.

[Example 1] Variable 99 = 00123456h (Decimal: 1193046, BCD: 123456)

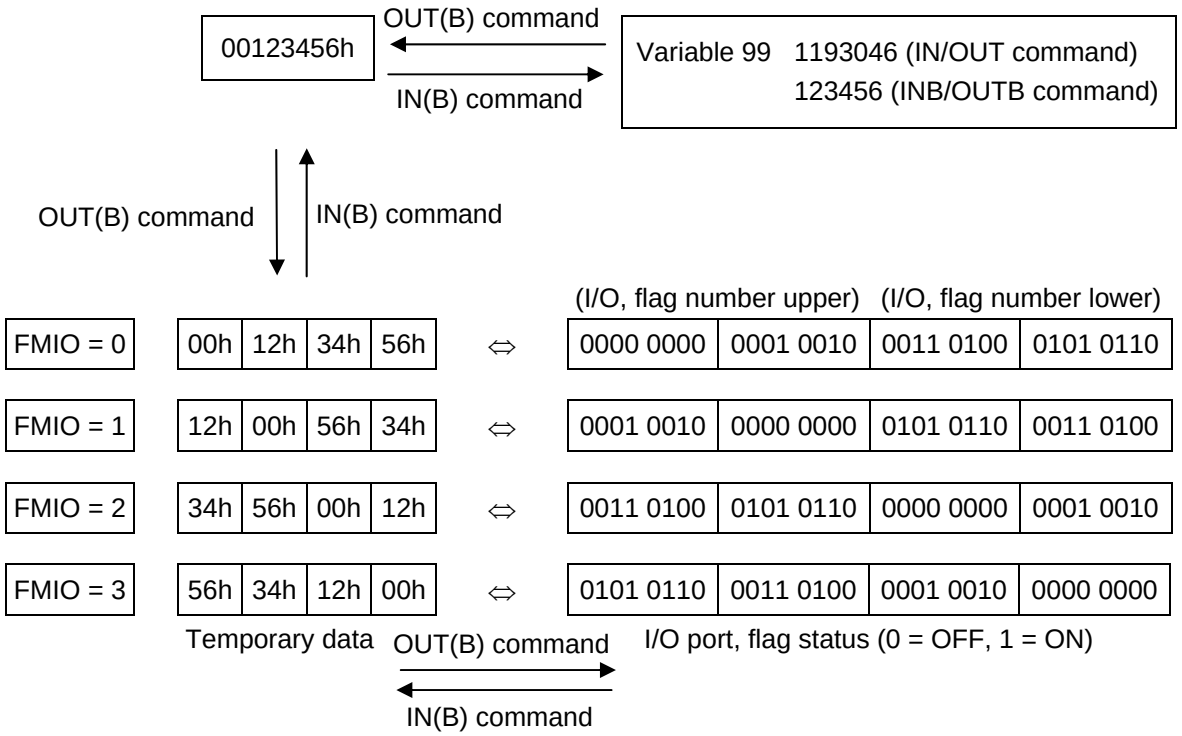

[Example 2] Variable 99 = 00001234h (Decimal: 4660, BCD: 1234)

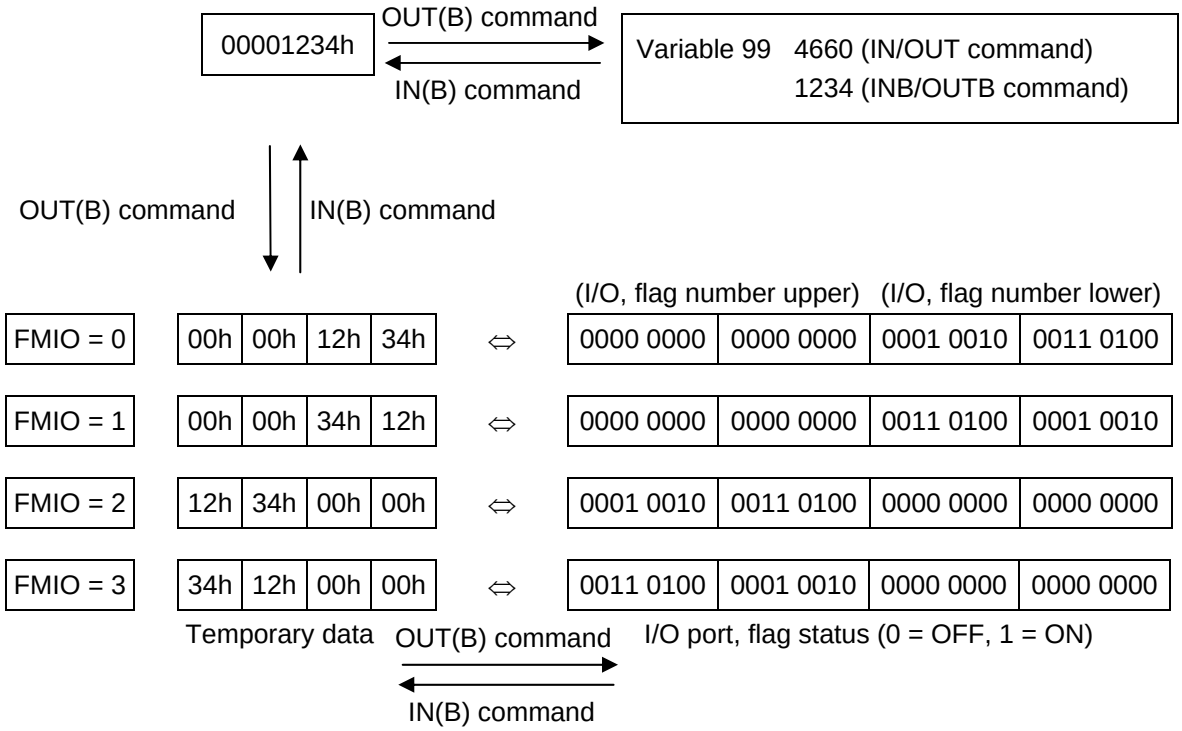

[Example 3] Variable 99 = 00000012h (Decimal: 18, BCD: 12)

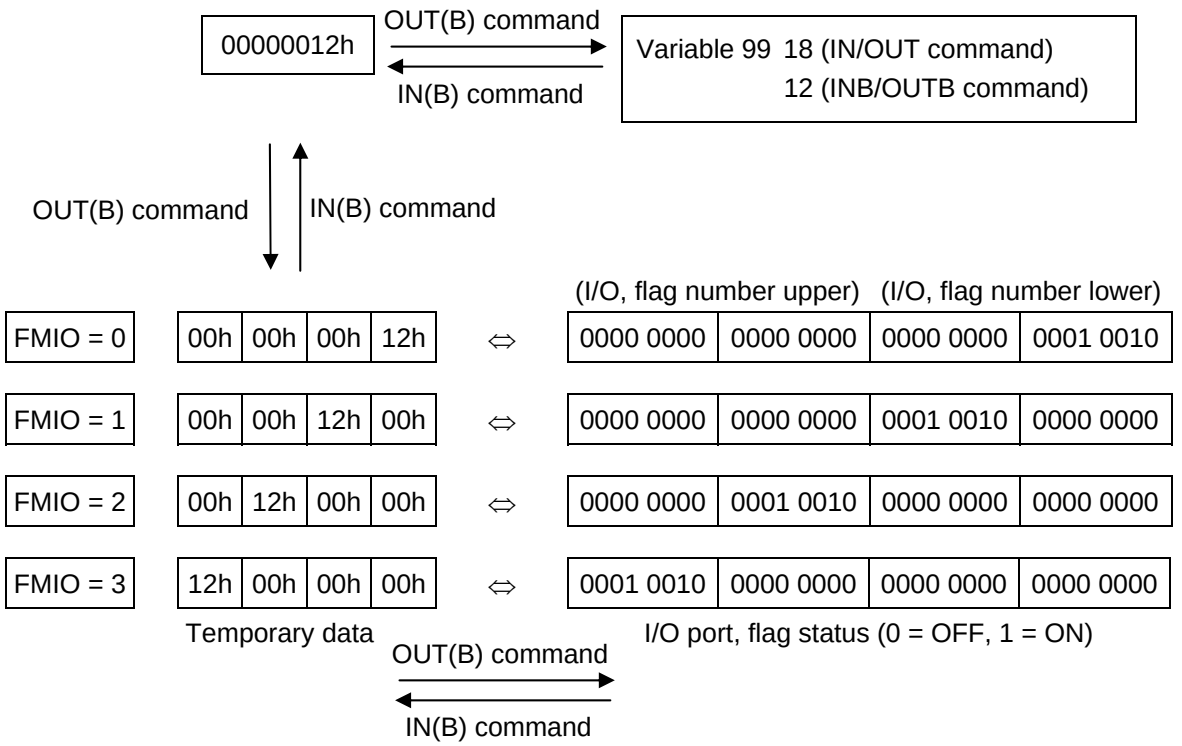

1.8 Program Control

- GOTO (Jump)

Extension condition (LD, A, O, AB, OB)	Input condition (I/O, flag)	Command, declaration			Output (Output, flag)
		Command, declaration	Operand 1	Operand 2	
Optional	Optional	GOTO	Tag number	Prohibited	CP

[Function] Jump to the position of the tag number specified in operand 1.

(Note) A GOTO command is valid only within the same program.

[Example 1]
```
TAG     1       Set a tag.
 :
 :
 :
GOTO    1       Jump to tag 1.
```

Using a GOTO command to branch out of or into any of the syntaxes listed below is prohibited.

Since the maximum number of nests is defined for each conditional branching command or subroutine call, a nest will be infinitely repeated if an ED□□ is not passed, and a nest overflow error will generate. In the case of palletizing setting, an error will generate if the second BGPA is declared after the first BGPA declaration without passing an EDPA.

(1) IF□□ or IS□□ and EDIF syntax
(2) DW□□ and EDDO syntax
(3) SLCT and EDSL syntax
(4) BGSR and EDSR syntax
(5) BGPA and EDPA syntax

- TAG (Declare tag)

Extension condition (LD, A, O, AB, OB)	Input condition (I/O, flag)	Command, declaration			Output (Output, flag)
		Command, declaration	Operand 1	Operand 2	
Prohibited	Prohibited	TAG	Tag number	Prohibited	CP

[Function] Set the tag number specified in operand 1.

[Example 1] Refer to the section on GOTO command.

- EXSR (Execute subroutine)

Extension condition (LD, A, O, AB, OB)	Input condition (I/O, flag)	Command, declaration			Output (Output, flag)
		Command, declaration	Operand 1	Operand 2	
Optional	Optional	EXSR	Subroutine number	Prohibited	CP

[Function] Execute the subroutine specified in operand 1.
A maximum of 15 nested subroutine calls are supported.

(Note) This command is valid only for subroutines within the same program.

[Example 1]
```
EXSR    1           Execute subroutine 1.
  :
  :
EXIT
BGSR    1           Start subroutine 1.
  :
  :
  :
EDSR                End subroutine 1.
```

[Example 2]
```
LET     1    10     Assign 10 to variable 1.
EXSR    *1          Execute the content of variable 1 (subroutine 10).
```

- BGSR (Start subroutine)

Extension condition (LD, A, O, AB, OB)	Input condition (I/O, flag)	Command, declaration			Output (Output, flag)
		Command, declaration	Operand 1	Operand 2	
Prohibited	Prohibited	BGSR	Subroutine number	Prohibited	CP

[Function] Declare the start of the subroutine specified in operand 1.

[Example 1] Refer to the section on EXSR command.

(Note) Using a GOTO command to branch out of or into a BGSR-EDSR syntax is prohibited.

- EDSR (End subroutine)

Extension condition (LD, A, O, AB, OB)	Input condition (I/O, flag)	Command, declaration			Output (Output, flag)
		Command, declaration	Operand 1	Operand 2	
Prohibited	Prohibited	EDSR	Prohibited	Prohibited	CP

[Function] Declare the end of a subroutine.
This command is always required at the end of a subroutine.
Thereafter, the program will proceed to the step next to the EXSR that has been called.

[Example 1] Refer to the section on EXSR command.

1.9 Task Management

- EXIT (End program)

Extension condition (LD, A, O, AB, OB)	Input condition (I/O, flag)	Command, declaration			Output (Output, flag)
		Command, declaration	Operand 1	Operand 2	
Optional	Optional	EXIT	Prohibited	Prohibited	CP

[Function] End the program.
If the last step has been reached without encountering any EXIT command, the program will return to the beginning.

(Note) Status at program end

- Output ports ..... Retained
- Local flags ..... Cleared
- Local variables ..... Cleared
- Current values ..... Retained
- Global flags ..... Retained
- Global variables ..... Retained

[Example 1]

```
    :
    :
EXIT        End the program.
```

- EXPG (Start other program)

Extension condition (LD, A, O, AB, OB)	Input condition (I/O, flag)	Command, declaration			Output (Output, flag)
		Command, declaration	Operand 1	Operand 2	
Optional	Optional	EXPG	Program number	(Program number)	CC

[Function] Start the programs from the one specified in operand 1 through the other specified in operand 2, and run them in parallel. Specification in operand 1 only is allowed.

[Example 1] EXPG 10 12 Start program Nos. 10, 11 and 12.

Error-generation/output-operation conditions
When one EXPG program is specified (only operand 1 is specified)

Status of the specified program	No program number error *1			Program number error *1
	Program already registered		Program not yet registered	
	Program running	Program not running		
Error	A57 “Multiple program start error”	None	C03 “Non-registered program specification error”	C2C “Program number error”
Output operation	ON	ON	OFF	OFF

* The errors shown in the table represent those that generate in accordance with the status of the specified program. Errors caused by other factors are excluded.
* 1 --- Program number error indicates specification of a number smaller than 1 or exceeding 64.

When multiple EXPG programs are specified (both operands 1 and 2 are specified)

Status of the specified program	No program number error *2			Program number error *1
	Registered program exists inside the specified range *3		None of programs inside the specified range are registered	
	Running program exists inside the specified range	None of programs inside the specified range are running		
Error	A57 “Multiple program start error”	None	C03 “Non-registered program specification error”	C2C “Program number error”
Output operation	ON	ON	OFF	OFF

* The errors shown in the table represent those that generate in accordance with the status of the specified program. Errors caused by other factors are excluded.
* 2 --- Program number error indicates specification of a number smaller than 1 or exceeding 64.
* 3 --- In this case, non-registered programs inside the specified range are not treated as a target of operation. This will not affect error generation or output operation.

- ABPG (Abort other program)

Extension condition (LD, A, O, AB, OB)	Input condition (I/O, flag)	Command, declaration			Output (Output, flag)
		Command, declaration	Operand 1	Operand 2	
Optional	Optional	ABPG	Program number	(Program number)	CC

[Function] Forcibly end the programs from the one specified in operand 1 to the other specified in operand 2. Specification in operand 1 only is allowed.

(Note 1) If an ABPG command is issued while a movement command is being executed, the axes will immediately decelerate and stop.
(Note 2) Not only the operation but also the execution of the step itself will be terminated.

[Example 1] ABPG 10 12 End program Nos. 10, 11 and 12.

Error-generation/output-operation conditions
When one ABPG program is specified (only operand 1 is specified)

Status of the specified program	No program number error *1			Program number error *1
	Program already registered		Program not yet registered	
	Program running	Program not running		
Error	None	None	None	C2C "Program number error"
Output operation	ON (OFF *2)	ON	ON	OFF

* The errors shown in the table represent those that generate in accordance with the status of the specified program. Errors caused by other factors are excluded.
* 1 --- Program number error indicates specification of a number smaller than 1 or exceeding 64.
* 2 --- If an own task (own program) is specified in an ABPG command, the own task will be terminated and then deleted. The output will turn OFF.

When multiple ABPG programs are specified (both operands 1 and 2 are specified)

Status of the specified program	No program number error *3			Program number error *1
	Registered program exists inside the specified range *4		None of programs inside the specified range are registered	
	Running program exists inside the specified range	None of programs inside the specified range are running		
Error	None	None	None	C2C "Program number error"
Output operation	ON (OFF *5)	ON	ON	OFF

* The errors shown in the table represent those that generate in accordance with the status of the specified program. Errors caused by other factors are excluded.
* 3 --- Program number error indicates specification of a number smaller than 1 or exceeding 64.
* 4 --- In this case, non-registered programs inside the specified range are not treated as a target of operation. This will not affect error generation or output operation.
* 5 --- If an own task (own program) is included in the specified range, the own task will be terminated, upon which the processing of the ABPG command will end. Since the own task will be deleted, the result of ending the processing of specified programs will become indeterminable. Exercise caution. The output will always turn OFF regardless of the result.

● SSPG (Pause program)

Extension condition (LD, A, O, AB, OB)	Input condition (I/O, flag)	Command, declaration			Output (Output, flag)
		Command, declaration	Operand 1	Operand 2	
Optional	Optional	SSPG	Program number	(Program number)	CC

[Function] Pause the program from the one specified in operand 1 through the other specified in operand 2, at the current step. Specification in operand 1 only is allowed.

(Note 1) Pausing a program will also pause the operation the program has been executing.
(Note 2) Not only the operation but also the execution of the step itself will be paused.

[Example 1] SSPG 10 12 Pause program Nos. 10, 11 and 12 at the current step.

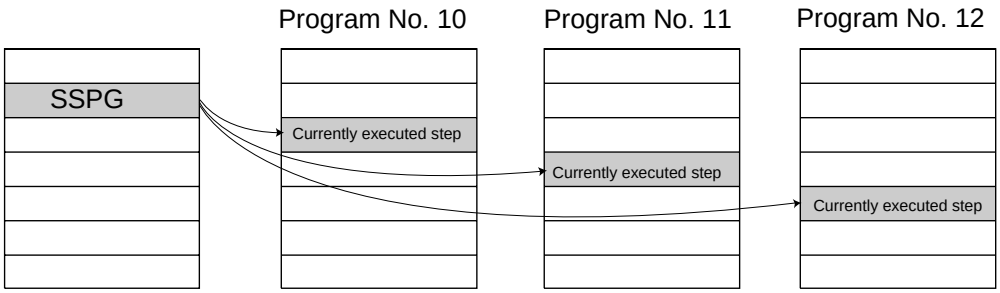

Error-generation/output-operation conditions
When one SSPG program is specified (only operand 1 is specified)

Status of the specified program	No program number error *1			Program number error *1
	Program already registered		Program not yet registered	
	Program running	Program not running		
Error	None	None	C03 “Non-registered program specification error”	C2C “Program number error”
Output operation	ON	OFF	OFF	OFF

* The errors shown in the table represent those that generate in accordance with the status of the specified program. Errors caused by other factors are excluded.
* 1 --- Program number error indicates specification of a number smaller than 1 or exceeding 64.

When multiple SSPG programs are specified (both operands 1 and 2 are specified)

Status of the specified program	No program number error *2			Program number error *1
	Registered program exists inside the specified range *3		None of programs inside the specified range are registered	
	Running program exists inside the specified range *4	None of programs inside the specified range are running		
Error	None	None	C03 “Non-registered program specification error”	C2C “Program number error”
Output operation	ON	OFF	OFF	OFF

* The errors shown in the table represent those that generate in accordance with the status of the specified program. Errors caused by other factors are excluded.
* 2 --- Program number error indicates specification of a number smaller than 1 or exceeding 64.
* 3 --- In this case, non-registered programs inside the specified range are not treated as a target of operation with EXPG, ABPG, SSPG and PSPG commands. This will not affect error generation or output operation.
* 4 --- In this case, programs not running (but already registered) inside the specified range are not treated as a target of operation with SSPG and RSPG commands. This will not affect error generation or output operation.

● RSPG (Resume program)

Extension condition (LD, A, O, AB, OB)	Input condition (I/O, flag)	Command, declaration			Output (Output, flag)
		Command, declaration	Operand 1	Operand 2	
Optional	Optional	RSPG	Program number	(Program number)	CC

[Function] Resume the programs from the one specified in operand 1 through the other specified in operand 2. Specification in operand 1 only is allowed.

(Note 1) Resuming a program will also resume the operation the program had been executing before the pause.

[Example 1] RSPG 10 12 Resume program Nos. 10, 11 and 12 from the paused step.

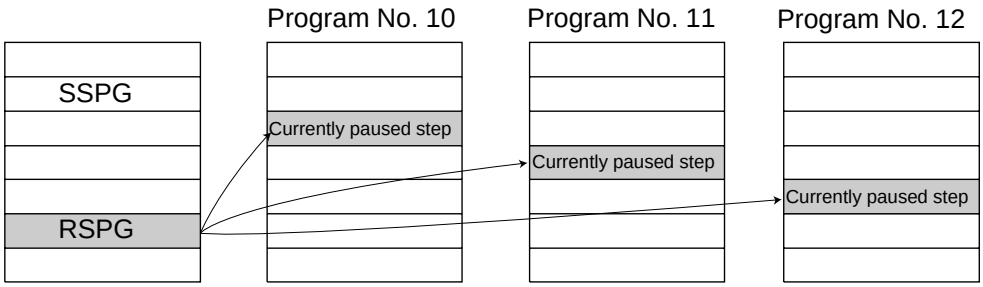

Error-generation/output-operation conditions

When one RSPG program is specified (only operand 1 is specified)

Status of the specified program	No program number error *1			Program number error *1
	Program already registered		Program not yet registered	
	Program running	Program not running		
Error	None	None	C03 “Non-registered program specification error”	C2C “Program number error”
Output operation	ON	OFF	OFF	OFF

* The errors shown in the table represent those that generate in accordance with the status of the specified program. Errors caused by other factors are excluded.

* 1 --- Program number error indicates specification of a number smaller than 1 or exceeding 64.

When multiple RSPG programs are specified (both operands 1 and 2 are specified)

Status of the specified program	No program number error *2			Program number error *1
	Registered program exists inside the specified range *3		None of programs inside the specified range are registered	
	Running program exists inside the specified range *4	None of programs inside the specified range are running		
Error	None	None	C03 “Non-registered program specification error”	C2C “Program number error”
Output operation	ON	OFF	OFF	OFF

* The errors shown in the table represent those that generate in accordance with the status of the specified program. Errors caused by other factors are excluded.

* 2 --- Program number error indicates specification of a number smaller than 1 or exceeding 64.

* 3 --- In this case, non-registered programs inside the specified range are not treated as a target of operation. This will not affect error generation or output operation.

* 4 --- In this case, programs not running (but already registered) inside the specified range are not treated as a target of operation with SSPG and RSPG commands. This will not affect error generation or output operation.

1.10 Position Operation

- PGET (Read position data)

Extension condition (LD, A, O, AB, OB)	Input condition (I/O, flag)	Command, declaration			Output (Output, flag)
		Command, declaration	Operand 1	Operand 2	
Optional	Optional	PGET	Axis number	Position number	CC

[Function] Read to variable 199 the data of the axis number specified in operand 1 in the position data specified in operand 2.
Even if a PGET command is executed, data will not be stored in variable 199 (the PGET command will not be executed) if there is no position data to be read (the position data fields on the teaching pendant show “X.XXX” or the position data fields in the PC software are blank).

[Example 1]	PGET	2	3	Read to variable 199 the data of axis 2 at position 3.
[Example 2]	LET	1	2	Assign 2 to variable 1.
	LET	2	3	Assign 3 to variable 2.
	PGET	*1	*2	Read to variable 199 the data of the content of variable 1 (axis 2) at the content of variable 2 (position 3).

- PPUT (Write position data)

Extension condition (LD, A, O, AB, OB)	Input condition (I/O, flag)	Command, declaration			Output (Output, flag)
		Command, declaration	Operand 1	Operand 2	
Optional	Optional	PPUT	Axis number	Position number	CP

[Function] Write the value in variable 199 to the axis number specified in operand 1 in the position data specified in operand 2.

[Example 1]

LET	199	150	Assign 150 to variable 199.
PPUT	2	3	Write the content of variable 199 (150) to axis 2 at position 3.

[Example 2]

LET	199	150	Assign 150 to variable 199.
LET	1	2	Assign 2 to variable 1.
LET	2	3	Assign 3 to variable 2
PPUT	*1	*2	Write the content of variable 199 (150) to the content of variable 1 (axis 2) at the content of variable 2 (position 3).

- PCLR (Clear position data)

Extension condition (LD, A, O, AB, OB)	Input condition (I/O, flag)	Command, declaration			Output (Output, flag)
		Command, declaration	Operand 1	Operand 2	
Optional	Optional	PCLR	Position number	Position number	CP

[Function] Clear the position data from the one specified in operand 1 through the other specified in operand 2.
The cleared data will be in the condition without a data and will not be 0.000. The position data display will read X.XXX on the teaching pendant and blank on the PC software.

[Example 1]	PCLR	10	20	Clear the data from position Nos. 10 through 20.
[Example 2]	LET	1	10	Assign 10 to variable 1.
	LET	2	20	Assign 20 to variable 2.
	PCLR	*1	*2	Clear the data of the content of variable 1 (position 10) through the content of variable 2 (position 20).

- PCPY (Copy position data)

Extension condition (LD, A, O, AB, OB)	Input condition (I/O, flag)	Command, declaration			Output (Output, flag)
		Command, declaration	Operand 1	Operand 2	
Optional	Optional	PCPY	Position number	Position number	CP

[Function] Copy the position data specified in operand 2 to the position number specified in operand 1.

[Example 1]	PCPY	20	10	Copy the data of position No. 10 to position No. 20.
[Example 2]	LET	1	20	Assign 20 to variable 1.
	LET	2	10	Assign 10 to variable 2.
	PCPY	*1	*2	Copy the data of the content of variable 2 (position 10) to the content of variable 1 (position 20).

- PRED (Read current position)

Extension condition (LD, A, O, AB, OB)	Input condition (I/O, flag)	Command, declaration			Output (Output, flag)
		Command, declaration	Operand 1	Operand 2	
Optional	Optional	PRED	Axis pattern	Position number	CP

[Function] Read the current position of the axis specified in operand 1 to the position specified in operand 2.

[Example 1]

```
PRED    11    10    Read the current positions of axes 1 and 2 to position No. 10.
```

[Example 2] The axis pattern can be specified indirectly using a variable.
When the command in [Example 1] is rephrased based on indirect specification using a variable:
11 (binary) → 3 (decimal)

```
LET     1     3     Assign 3 to variable 1.
PRED    *1    10
```

[Example 3]

```
LET     1     10    Assign 10 to variable 1.
PRED    11    *1    Read the current positions of axes 1 and 2 to the content of
                    variable 1 (position 10).
```

- PRDQ (Read current axis position (1 axis direct))

Extension condition (LD, A, O, AB, OB)	Input condition (I/O, flag)	Command, declaration			Output (Output, flag)
		Command, declaration	Operand 1	Operand 2	
Optional	Optional	PRDQ	Axis number	Variable number	CP

This command can be input using the PC software of version 1.1.0.5 or later or teaching pendant of version 1.05 or later.

[Function] Read the current position of the axis number specified in operand 1 to the variable specified in operand 2.
The current position can be obtained more quickly than when a PRED command is used.
The current position of a synchronized slave axis can also be read.

[Example] PRDQ 2 100 Read the current position of axis 2 to variable 100.

- PTST (Check position data)

Extension condition (LD, A, O, AB, OB)	Input condition (I/O, flag)	Command, declaration			Output (Output, flag)
		Command, declaration	Operand 1	Operand 2	
Optional	Optional	PTST	Axis pattern	Position number	CC

[Function] Check if valid data is contained in the axis pattern specified in operand 1 at the position number specified in operand 2.
The output will turn ON if none of the data specified by the axis pattern is available (the position data fields on the teaching pendant show “X.XXX” or the position data fields in the PC software are blank). “0” is treated as valid data.

[Example 1]

```
PTST   11   10   300
```

Turn ON output 300 if there are no valid values of axes 1 and 2 at position 10.
Output 300 will turn OFF if the position data is given as follows:

[Example 2] The axis pattern can be specified indirectly using a variable.
When the command in [Example 1] is rephrased based on indirect specification using a variable:
11 (binary) → 3 (decimal)

```
LET    1    3              Assign 3 to variable 1.
PTST   *1   10   300
```

[Example 3]

```
LET    1    11             Assign 11 to variable 1.
PTST   11   *1   600
```

Turn ON flag 600 if there are no valid values in the data of axes 1 and 2 at the content of variable 1 (position 11).
Flag 600 will turn ON if the position data is given as follows:

No.	Axis 1	Axis 2	Axis 3	Speed	Acceleration	Deceleration
10	100.000	50.000				
11			200.000			

- PVEL (Assign speed data)

Extension condition (LD, A, O, AB, OB)	Input condition (I/O, flag)	Command, declaration			Output (Output, flag)
		Command, declaration	Operand 1	Operand 2	
Optional	Optional	PVEL	Speed	Position number	CP

[Function] Write the speed specified in operand 1 to the position number specified in operand 2.

(Note) If a negative value is written with a PVEL command, an alarm will generate when that position is specified in a movement operation, etc. Exercise caution.

[Example 1]	PVEL	100	10	Write speed 100 mm/s to position No. 10.
[Example 2]	LET	1	100	Assign 100 to variable 1.
	LET	2	10	Assign 10 to variable 2.
	PVEL	*1	*2	Write the content of variable 1 (speed 100 mm/s) to the content of variable 2 (position 10).

- PACC (Assign acceleration data)

Extension condition (LD, A, O, AB, OB)	Input condition (I/O, flag)	Command, declaration			Output (Output, flag)
		Command, declaration	Operand 1	Operand 2	
Optional	Optional	PACC	Acceleration	Position number	CP

[Function] Write the acceleration specified in operand 1 to the position number specified in operand 2.

(Note) Range check is not performed for a PACC command. Be careful not to exceed the limit set for each actuator.

[Example 1]
```
PACC    0.3     10      Write acceleration 0.3 G to position No. 10.
```
[Example 2]
```
LET     100     0.3     Assign 0.3 to variable 100.
LET     2       10      Assign 10 to variable 2.
PACC    *100    *2      Write the content of variable 100 (acceleration 0.3 G) to the
                        content of variable 2 (position 10).
```

- PDCL (Assign deceleration data)

Extension condition (LD, A, O, AB, OB)	Input condition (I/O, flag)	Command, declaration			Output (Output, flag)
		Command, declaration	Operand 1	Operand 2	
Optional	Optional	PDCL	Deceleration	Position number	CP

[Function] Assign the deceleration data specified in operand 1 to the deceleration item in the position data specified in operand 2.
The deceleration is set in G and may include up to two decimal places.

[Example 1] PDCL 0.3 3 Assign 0.3 to the deceleration data at position No. 3.

- PAXS (Read axis pattern)

Extension condition (LD, A, O, AB, OB)	Input condition (I/O, flag)	Command, declaration			Output (Output, flag)
		Command, declaration	Operand 1	Operand 2	
Optional	Optional	PAXS	Variable number	Position number	CP

[Function] Store the axis pattern at the position specified in operand 2 to the variable specified in operand 1.

[Example 1]

```
PAXS  1  99
```

Read the axis pattern at position 99 to variable 1.
If the position is given as follows, “1” (binary 01) will be read to variable 1.

[Example 2]

```
LET   1  3
LET   2  101
PAXS  *1 *2
```

Assign 3 to variable 1.
Assign 101 to variable 2.
Read the axis pattern at the content of variable 2 (position 101) to the content of variable 1 (variable 3).
If the point is given as follows, “3” (binary 11) will be stored in variable 3.

The table below shows different positions and corresponding values stored in a variable.

	Axis 1	Axis 2		
98			.....	0 0 = 0 + 0 = 0
99	100.XXX		.....	0 1 = 0 + 1 = 1
100		150.000	.....	1 0 = 2 + 0 = 2
101	100.000	50.000	.....	1 1 = 2 + 1 = 3

- PSIZ (Check position data size)

Extension condition (LD, A, O, AB, OB)	Input condition (I/O, flag)	Command, declaration			Output (Output, flag)
		Command, declaration	Operand 1	Operand 2	
Optional	Optional	PSIZ	Variable number	Prohibited	CP

[Function] Set an appropriate value in the variable specified in operand 1 in accordance with the parameter setting.

- When “Other parameter No. 23, PSIZ function type” = 0
  The maximum number of position data that can be stored in the controller will be set.
  (Regardless of whether the data are used or not.)
- When “Other parameter No. 23, PSIZ function type” = 1
  The number of point data used will be set.

[Example] PSIZ 1
When “Other parameter No. 23, PSIZ function type” = 0
The maximum number of position data that can be stored in variable 1 will be set.
When “Other parameter No. 23, PSIZ function type” = 1
The number of point data currently used will be set in variable 1.

- GVEL (Get speed data)

Extension condition (LD, A, O, AB, OB)	Input condition (I/O, flag)	Command, declaration			Output (Output, flag)
		Command, declaration	Operand 1	Operand 2	
Optional	Optional	GVEL	Variable number	Position number	CP

[Function] Obtain speed data from the speed item in the position data specified in operand 2, and set the value in the variable specified in operand 1.

[Example] GVEL 100 10 Set the speed data at position No. 10 in variable 100.

Position No.	Axis 1	Axis 2	Axis 3	Vel	Acc	Dcl
1						
2						
• • • •						
10	50.000	100.000	150.000	200	0.30	0.30
• •						

If the position data is set as above when the command is executed, 200 will be set in variable 100.

- GACC (Get acceleration data)

Extension condition (LD, A, O, AB, OB)	Input condition (I/O, flag)	Command, declaration			Output (Output, flag)
		Command, declaration	Operand 1	Operand 2	
Optional	Optional	GACC	Variable number	Position number	CP

[Function] Obtain acceleration data from the acceleration item in the position data specified in operand 2, and set the value in the variable specified in operand 1.

[Example] GACC 100 10 Set the acceleration data at position No. 10 in variable 100.

Position No.	Axis 1	Axis 2	Axis 3	Vel	Acc	Dcl
1						
2						
• • • •						
10	50.000	100.000	150.000	200	0.30	0.30
• •						

If the position data is set as above when the command is executed, 0.3 will be set in variable 100.

- GDCL (Get deceleration data)

Extension condition (LD, A, O, AB, OB)	Input condition (I/O, flag)	Command, declaration			Output (Output, flag)
		Command, declaration	Operand 1	Operand 2	
Optional	Optional	GDCL	Variable number	Position number	CP

[Function] Obtain deceleration data from the deceleration item in the position data specified in operand 2, and set the value in the variable specified in operand 1.

[Example] GDCL 100 10 Set the deceleration data at position No. 10 in variable 100.

Position No.	Axis 1	Axis 2	Axis 3	Vel	Acc	Dcl
1						
2						
• • • •						
10	50.000	100.000	150.000	200	0.30	0.30
• •						

If the position data is set as above when the command is executed, 0.3 will be set in variable 100.

1.11 Actuator Control Declaration

- VEL (Set speed)

Extension condition (LD, A, O, AB, OB)	Input condition (I/O, flag)	Command, declaration			Output (Output, flag)
		Command, declaration	Operand 1	Operand 2	
Optional	Optional	VEL	Speed	Prohibited	CP

[Function] Set the actuator travel speed in the value specified in operand 1.
The unit is mm/s.
The maximum speed will vary depending on the model of the actuator connected. Set a speed not exceeding the applicable maximum speed.

(Note 1) Decimal places cannot be used. An error will generate
(Note 2) The minimum speed is 1 mm/s.

```
[Example 1]   VEL    100          Set the speed to 100 mm/s.
              MOVP   1            Move to point 1 at 100 mm/s.

[Example 2]   VEL    500          Set the speed to 500 mm/s.
              MOVP   2            Move to point 2 at 500 mm/s.

[Example 3]   LET    1    300     Assign 300 to variable 1.
              VEL    *1           Set the speed to the content of variable 1 (300 mm/s).
```

- OVRD (Override)

Extension condition (LD, A, O, AB, OB)	Input condition (I/O, flag)	Command, declaration			Output (Output, flag)
		Command, declaration	Operand 1	Operand 2	
Optional	Optional	OVRD	Speed ratio	Prohibited	CP

[Function] Reduce the speed in accordance with the ratio specified in operand 1 (speed coefficient setting). The speed ratio is set in a range from 1 to 100%.
A speed command specifying a speed below 1 mm/sec can be generated using OVRD.
Command limit speed for smooth operation: 1 pulse/msec
Command limit speed that can be generated: 1 pulse/256 msec
(Smoothness of actual operation cannot be guaranteed. Movement must be checked on the actual machine.)
1 pulse: Lead [mm] / 16384 --- Standard product with a gear ratio of 1:1
(The speed set in a PAPR command (push-motion approach speed) will be clamped by the minimum speed of 1 mm/sec.)

[Example 1]

VEL	100	Set the speed to 100 mm/s.
OVRD	50	Reduce the speed to 50%.
		As a result, the actual speed will become 50 mm/s.

- ACC (Set acceleration)

Extension condition (LD, A, O, AB, OB)	Input condition (I/O, flag)	Command, declaration			Output (Output, flag)
		Command, declaration	Operand 1	Operand 2	
Optional	Optional	ACC	Acceleration	Prohibited	CP

[Function] Set the travel acceleration of the actuator.
The maximum acceleration will vary depending on the load and model of the actuator connected.
The acceleration is set in G and may include up to two decimal places.

(Note) If the position data contains no acceleration AND acceleration is not set by an ACC command, the actuator will move based on the default value set in “All-axis parameter No. 11, Default acceleration.”

[Example 1] ACC 0.3 Set the acceleration to 0.3 G.

(Note) Setting an acceleration exceeding the specified range for the actuator may generate an error. It may also result in a failure or shorter product life.

- DCL (Set deceleration)

Extension condition (LD, A, O, AB, OB)	Input condition (I/O, flag)	Command, declaration			Output (Output, flag)
		Command, declaration	Operand 1	Operand 2	
Optional	Optional	DCL	Deceleration	Prohibited	CP

[Function] Set the travel deceleration of the actuator.
The maximum deceleration will vary depending on the load and model of the actuator connected.
The deceleration is set in G and may include up to two decimal places.

(Note) If the position data contains no deceleration AND deceleration is not set by a DCL command, the actuator will move based on the default value set in “All-axis parameter No. 12, Default deceleration.”
A DCL command cannot be used with CIR and ARC commands.

[Example] DCL 0.3 Set the deceleration to 0.3 G.

(Note) Setting a deceleration exceeding the specified range for the actuator may generate an error. It may also result in a failure or shorter product life.

- SCRV (Set sigmoid motion ratio)

Extension condition (LD, A, O, AB, OB)	Input condition (I/O, flag)	Command, declaration			Output (Output, flag)
		Command, declaration	Operand 1	Operand 2	
Optional	Optional	SCRV	Ratio	Prohibited	CP

[Function] Set the ratio of sigmoid motion control of the actuator in the value specified in operand 1. The ratio is set as an integer in a range from 0 to 50 (%).

$$\frac{b}{a} \text{ X } 100 \text{ (\%)}$$

If the ratio is not set using this command or 0% is set, a trapezoid motion will be implemented.
A SCRV command can be used with the following commands: MOVP, MOVL, MVPI, MVLI, JBWF, JBWN, JFWF, JFWN

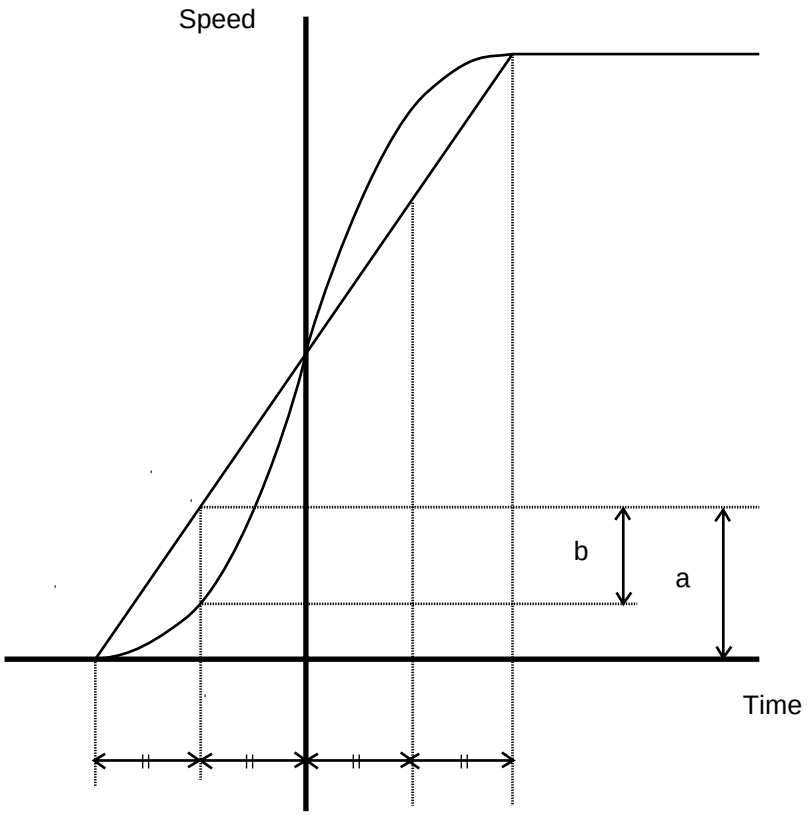

[Example 1] SCRV 30 Set the sigmoid motion ratio to 30%.

● OFST (Set offset)

Extension condition (LD, A, O, AB, OB)	Input condition (I/O, flag)	Command, declaration			Output (Output, flag)
		Command, declaration	Operand 1	Operand 2	
Optional	Optional	OFST	Axis pattern	Offset value	CP

[Function] Reset the target value by adding the offset value specified in operand 2 to the original target value when performing the actuator movement specified in operand 1.
The offset is set in mm, and the effective resolution is 0.001 mm.
A negative offset may be specified as long as the operation range is not exceeded.
An OFST command is processed with respect to soft axes before a BASE shift.

(Note) An OFST command cannot be used outside the applicable program. To use OFST in multiple programs, the command must be executed in each program.
An OFST command cannot be used with MVPI and MVLI commands.

[Example 1]

```
OFST    1100    50      Add 50 mm to the specified positions of axes 3 and 4.
  :
OFST    1100    0       Return the offsets of axes 3 and 4 to 0.
```

[Example 2] The axis pattern can be specified indirectly using a variable.
When the command in [Example 1] is rephrased based on indirect specification using a variable:
1100 (binary) → 12 (decimal)

```
LET     1       12      Assign 12 to variable 1.
OFST    *1      50
  :
OFST    *1      0
```

[Example 3]

```
LET     1       100     Assign 100 to variable 1.
OFST    1010    *1      Add the content of variable 1 (100 mm) to the specified
                        positions of axes 2 and 4.
```

- DEG (Set arc angle)

Extension condition (LD, A, O, AB, OB)	Input condition (I/O, flag)	Command, declaration			Output (Output, flag)
		Command, declaration	Operand 1	Operand 2	
Optional	Optional	DEG	Angle	Prohibited	CP

[Function] Set a division angle for the interpolation implemented by a CIR (move along circle) or ARC (move along arc) command.
When CIR or ARC is executed, a circle will be divided by the angle set here to calculate the passing points.
The angle is set in a range from 0 to 120 degrees.
If the angle is set to “0,” an appropriate division angle will be calculated automatically so that the actuator will operate at the set speed (maximum 180 degrees).
The angle is set in degrees and may include up to one decimal place.

(Note) If a CIR or ARC command is executed without setting an angle with this command, the default value registered in “All-axis parameter No. 30, Default division angle” will be used.

[Example] DEG 10 Set the division angle to 10 degrees.

- BASE (Specify axis base)

Extension condition (LD, A, O, AB, OB)	Input condition (I/O, flag)	Command, declaration			Output (Output, flag)
		Command, declaration	Operand 1	Operand 2	
Optional	Optional	BASE	Axis number	Prohibited	CP

[Function] Count the axes sequentially based on the axis number specified in operand 1 being the first axis.
A BASE command can be used with PRED, PRDQ, AXST, actuator-control, ARCH, PACH, PMVP, PMVL and zone commands. Note that each zone range is assigned to the actuator via parameter.

[Example 1]

```
HOME   1      Axis 1 returns to the home.
BASE   2      Axis 2 is considered the first axis.
HOME   1      Axis 2 returns to the home.
```

Hereafter, axes 2 to 4 will operate based on the specifications for axes 1 to 3 (axis number, axis pattern, position data, etc.).

[Example 2]

```
LET    1   3   Assign 3 to variable 1.
BASE   *1      The content of variable 1 (axis 3) will be considered as the
               first axis.
```

Hereafter, axes 3 and 4 will operate based on the specifications for axes 1 and 2.

- GRP (Set group axes)

Extension condition (LD, A, O, AB, OB)	Input condition (I/O, flag)	Command, declaration			Output (Output, flag)
		Command, declaration	Operand 1	Operand 2	
Optional	Optional	GRP	Axis pattern	Prohibited	CP

[Function] Allow only the position data of the axis pattern specified in operand 1 to become valid.
The program assumes that there are no data for other axes not specified.
When multiple programs are run simultaneously, assigning axes will allow the same position data to be used effectively among the programs.
A GRP command can be used with operand axis-pattern specification commands excluding an OFST command, as well as with servo operation commands using position data.
A GRP command is processed with respect to soft axes before a BASE shift.

[Example 1]

```
GRP     1100        Data of axes 3 and 4 become valid.
CIR2    1     2     Axis-pattern error will not generate even if data is set for axis
                    1 or 2.
```

[Example 2] The axis pattern can be specified indirectly using a variable.
When the command in [Example 1] is rephrased based on indirect specification using a variable:
1100 (binary) → 12 (decimal)

```
LET     1     12    Assign 12 to variable 1.
GRP     *1
CIR2    1     2
```

- HOLD (Hold: Declare axis port to pause)

Extension condition (LD, A, O, AB, OB)	Input condition (I/O, flag)	Command, declaration			Output (Output, flag)
		Command, declaration	Operand 1	Operand 2	
Optional	Optional	HOLD	(Input port, global flag)	(HOLD type)	CP

[Function] Declare an input port or global flag to pause while a servo command is being executed. When operation is performed on the input port or global flag specified in operand 1, the current servo processing will pause. (If the axes are moving, they will decelerate to a stop.) If nothing is specified in operand 1, the current pause declaration will become invalid.

A HOLD type can be specified in operand 2.
[HOLD type]
0 = Contact a (Deceleration stop)
1 = Contact b (Deceleration stop)
2 = Contact b (Deceleration stop → Servo OFF (The drive source will not be cut off))
The HOLD type is set to "0" (contact a) when the program is started.
If nothing is specified in operand 2, the current HOLD type will be used.
Using other task to issue a servo ON command to any axis currently stopped via a HOLD servo OFF will generate an "Error No. C66, Axis duplication error." If the servo of that axis was ON prior to the HOLD stop, the system will automatically turn on the servo when the HOLD is cancelled. Therefore, do not issue a servo ON command to any axis currently stopped via a HOLD servo OFF.
If any axis currently stopped via a HOLD servo OFF is moved by external force, etc., from the stopped position, and when the servo of that axis was ON prior to the HOLD stop, the axis will move to the original stopped position when the HOLD is cancelled before resuming operation.

(Note 1) The input port or global flag specified by a HOLD declaration will only pause the axes used in the task (program) in which the HOLD is declared. The declaration will not be valid on axes used in different tasks (programs).
(Note 2) An input port or global flag to pause is valid for all active servo commands other than a SVOF command. (A deceleration stop will also be triggered in J□W□ and PATH operations.)
(Note 3) Following a pause of home return, the operation will resume from the beginning of the home-return sequence.

[Example] HOLD 15 0 The axes will decelerate to a stop when input port 15 turns ON.

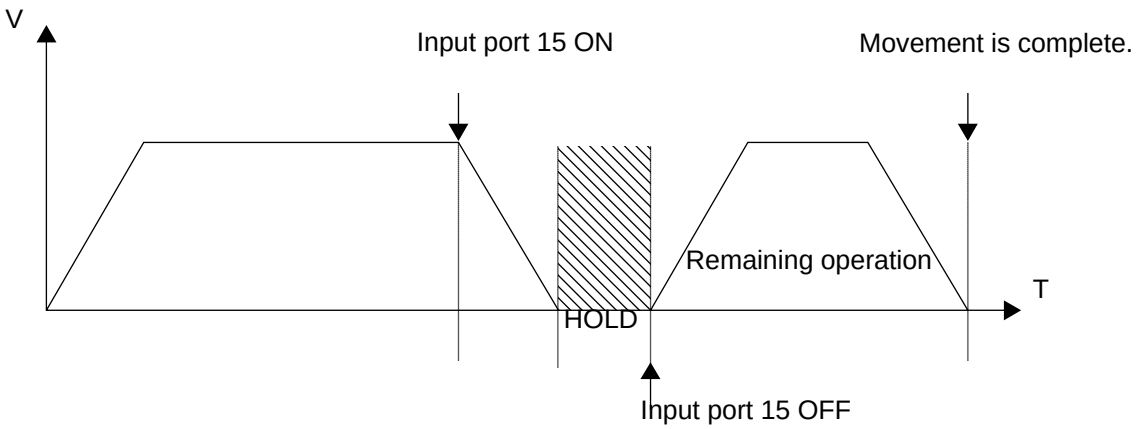

- CANC (Cancel: Declare axis port to abort)

Extension condition (LD, A, O, AB, OB)	Input condition (I/O, flag)	Command, declaration			Output (Output, flag)
		Command, declaration	Operand 1	Operand 2	
Optional	Optional	CANC	(Input port, global flag)	(CANC type)	CP

[Function] Declare an input port or global flag to abort while a servo command is being executed. When operation is performed on the input port or global flag specified in operand 1, the current servo processing will be aborted. (If the axes are moving, they will decelerate to a stop before the processing is aborted.)
If nothing is specified in operand 1, the current abort declaration will become invalid.

A CANC type can be specified in operand 2.
[CANC type]
0 = Contact a (Deceleration stop)
1 = Contact b (Deceleration stop)
The CANC type is set to “0” (contact a) when the program is started.
If nothing is specified in operand 2, the current CANC type will be used.

(Note 1) The input port or global flag specified by a CANC command will only abort the axes used in the task (program) in which the CANC is declared. The declaration will not be valid on axes used in different tasks (programs).
(Note 2) An input port or global flag to pause is valid for all active servo commands other than a SVOF command. (A deceleration stop will also be triggered in JXWX and PATH operations.)

[Example] CANC 14 0 The axes will decelerate to a stop when input port 14 turns ON.

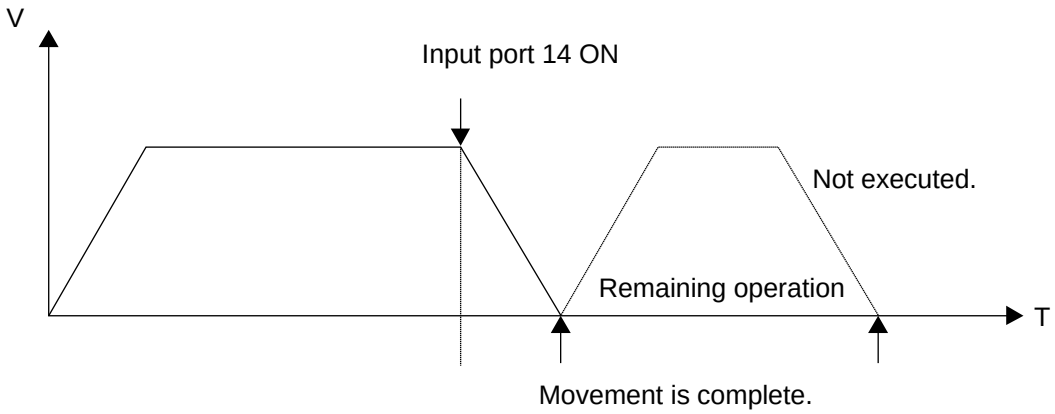

- VLMX (Specify VLMX speed)

Extension condition (LD, A, O, AB, OB)	Input condition (I/O, flag)	Command, declaration			Output (Output, flag)
		Command, declaration	Operand 1	Operand 2	
Optional	Optional	VLMX	Prohibited	Prohibited	CP

[Function] Set the actuator travel speed to the VLMX speed (normally maximum speed).
Executing a VLMX command will set the value registered in “Axis-specific parameter No. 29, VLMX speed” as the travel speed.

(Note) If the VLMX speed is specified in a continuous position travel command (PATH, PSPL), the target speed to each position will become a composite VLMX speed not exceeding the maximum speed of each axis set in “Axis-specific parameter No. 28, Maximum operating speed of each axis.” To make the target speed constant, a desired speed must be expressly specified using a VEL command.

[Example]

```
VEL     1000
MOVP    1
MOVP    2
VLMX
MOVP    3
MOVP    4
```

The speed becomes 1000 mm/sec in this section.

The speed becomes VLMX mm/sec in this section.

- DIS (Set division distance at spline movement)

Extension condition (LD, A, O, AB, OB)	Input condition (I/O, flag)	Command, declaration			Output (Output, flag)
		Command, declaration	Operand 1	Operand 2	
Optional	Optional	DIS	Distance	Prohibited	CP

[Function] Set a division distance for the interpolation implemented by a PSPL (move along spline) command.
When a PSPL command is executed, a passing point will be calculated at each distance set here and the calculated passing points will be used as interpolation points.
If the distance is set to “0,” an appropriate division distance will be calculated automatically so that the actuator will operate at the set speed
The distance is input in mm.

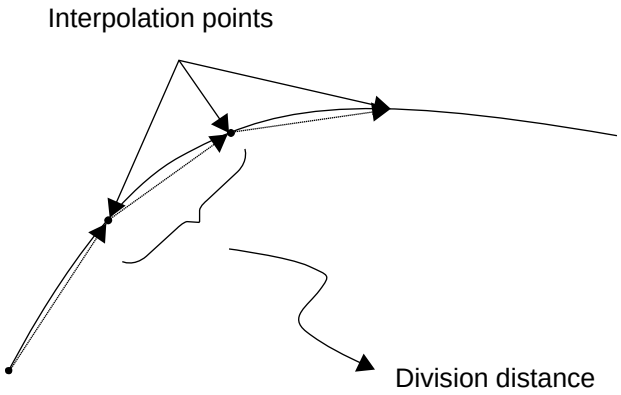

(Note) If a PSPL command is executed without setting a distance with a DIS command, the default value registered in “All-axis parameter No. 31, Default division distance” will be used.

[Example] DIS 10 Set the division distance to 10 mm.

● POTP (Set PATH output type)

Extension condition (LD, A, O, AB, OB)	Input condition (I/O, flag)	Command, declaration			Output (Output, flag)
		Command, declaration	Operand 1	Operand 2	
Optional	Optional	POTP	0 or 1	Prohibited	CP

[Function] Set the output type in the output field to be used when a PATH or PSPL command is executed.
When a PATH or PSPL command is executed, the output will operate as follows in accordance with the setting of the POTP command.

(1) POTP [Operand 1] = 0 (ON upon completion of operation)
The output port or flag will turn ON upon completion of operation.
(2) POTP [Operand 1] = 1 (Increment and output on approaching each position; ON upon completion of operation for the last position)
During PATH or PSPL operation, the output port number or flag number specified in the output field will be incremented and turned ON when each specified position approaches. At the last position, however, the output will turn ON upon completion of operation. This setting provides a rough guide for output in sequence control.

(Note 1) The default value of POTP, before it is set, is “0.”
(Note 2) If POTP = 1 and there is no valid data at the specified position, the output number will be incremented but the output will not turn ON. (The output number will be incremented regardless of the size of position numbers specified in operands 1 and 2 in a PATH or PSPL command.)

[Example]

```
POTP  1
PATH  1     5     300
```

Turn ON output port Nos. 300 through 304 sequentially each time a specified position approaches during a pass movement from position Nos. 1 through 5, starting from the first position.

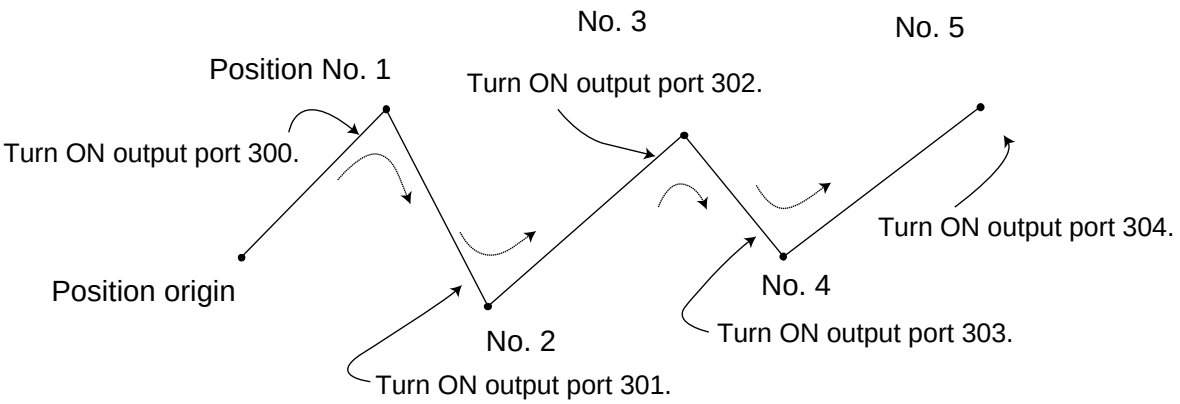

- PAPR (Set push-motion approach distance, speed)

Extension condition (LD, A, O, AB, OB)	Input condition (I/O, flag)	Command, declaration			Output (Output, flag)
		Command, declaration	Operand 1	Operand 2	
Optional	Optional	PAPR	Distance	Speed	CP

[Function] Set the operation to be performed when a PUSH command is executed.
Set the distance (push-motion approach distance) over which push-motion approach operation (torque-limiting operation) will be performed in operand 1 (in mm), and set the speed (push-motion approach speed) at which push-motion approach operation (torque-limiting operation) will be performed in operand 2 (in mm/sec).
The push-motion approach distance specified in operand 1 may contain up to three decimal places, while the speed specified in operand 2 cannot contain any decimal place.

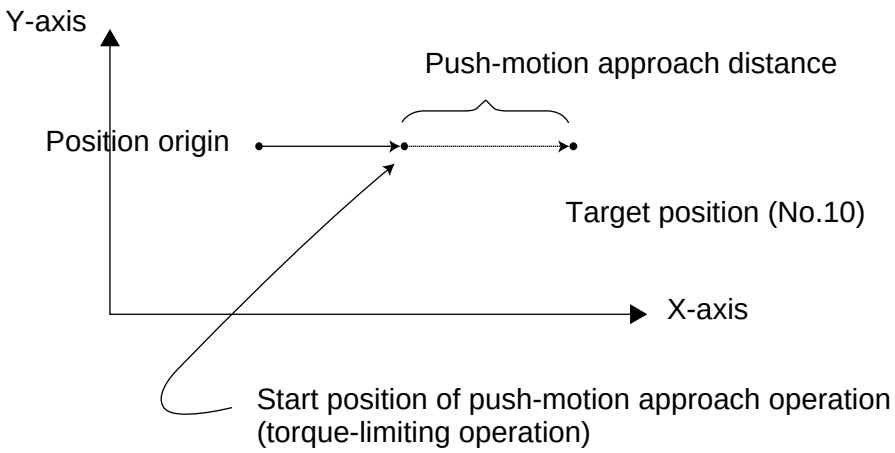

[Example]

PAPR	100	30	Set the push-motion approach distance in a PUSH command to 100 mm and the push-motion approach speed to 30 mm/sec.
MOVP	2		Move to position No. 2.
PUSH	10		Move by push motion from position No. 2 to position No. 10.

(Note) The push-motion approach speed in an OVRD command will be clamped by the minimum speed of 1 mm/sec. (Correct push-motion operation is not guaranteed at the minimum speed. Operation at slow push-motion approach must be checked on the actual machine by considering the effects of mechanical characteristics, etc.)

- QRTN (Set quick-return mode)

Extension condition (LD, A, O, AB, OB)	Input condition (I/O, flag)	Command, declaration			Output (Output, flag)
		Command, declaration	Operand 1	Operand 2	
Optional	Optional	QRTN	0 or 1	Prohibited	CP

[Function] Set and cancel the quick-return mode.

(1) QRTN [Operand 1] = 0 (Normal mode)
Positioning is deemed complete when all command pulses have been output and the current position is inside the positioning band.
* If a deceleration command is currently executed in the quick-return mode, the system will wait for all command pulses to be output.

(2) QRTN [Operand 1] = 1 (Quick-return mode)
Positioning is deemed complete when “a normal deceleration command is currently executed (excluding deceleration due to a stop command, etc.) or all command pulses have been output” AND “the current position is inside the positioning band.” This setting is used to perform other processing during deceleration, in conjunction with a PBND command.

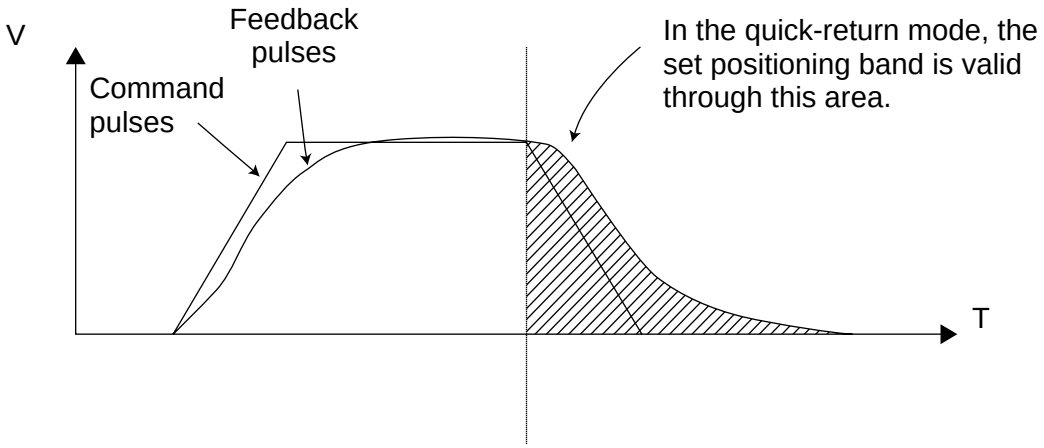

(Note 1) The quick-return mode will be cancelled when the program ends. (The positioning band set by a PBND command will not be cancelled.)

(Note 2) If a given axis is used even once in the quick-return mode, the program will not release the right to use the axis until the QRTN is set to “0” (normal mode) or the program ends. Any attempt to use the axis from other program will generate an “Error No. C66, Axis duplication error.”

(Note 3) Following a return from a normal deceleration command in the quick-return mode, the next positioning will start after all command pulses for the previous positioning have been output. Therefore, in the quick-return mode a simple reciprocating operation will require a longer tact time because of the extra completion check. In this sense, this setting should be used only if you wish to reduce the overall tact time by performing other processing during deceleration.

(Note 4) The quick-return mode represents very irregular processing. Therefore, be sure to revert to the normal mode when the overlay processing is completed in the necessary section.

(Note 5) The quick-return mode cannot be used with a push-motion travel command or arc interpolation command.

1.12 Actuator Control Command

- SV□□ (Turn ON/OFF servo)

Extension condition (LD, A, O, AB, OB)	Input condition (I/O, flag)	Command, declaration			Output (Output, flag)
		Command, declaration	Operand 1	Operand 2	
Optional	Optional	SV□□	Axis pattern	Prohibited	PE

[Function] Turn ON/OFF the servos of the axes specified by the axis pattern in operand 1.

SV□□
- ON ..... Turn ON the servo.
- OF ..... Turn OFF the servo.

[Example 1]

```
SVON    1100
```

Turn ON the servos of axes 3 and 4. Nothing will occur if the axis servos are already ON.

[Example 2] The axis pattern can be specified indirectly using a variable.
When the command in [Example 1] is rephrased based on indirect specification using a variable:
1100 (binary) → 12 (decimal)

```
LET     1       12      Assign 12 to variable 1.
SVON    *1
```

- HOME (Return to home)

Extension condition (LD, A, O, AB, OB)	Input condition (I/O, flag)	Command, declaration			Output (Output, flag)
		Command, declaration	Operand 1	Operand 2	
Optional	Optional	HOME	Axis pattern	Prohibited	PE

[Function] Perform home return of the axes specified by the axis pattern in operand 1.
The servo of each home-return axis will turn ON automatically.
The output will turn OFF at the start of home return, and turn ON when the home return is completed.

(Note) Following a pause of home return, the operation will resume from the beginning of the home-return sequence.
Home-return operation of an absolute-encoder axis is a movement to a rotation data reset position, and may not be a movement to the preset home coordinates (including 0). Use a MOVP command instead of a HOME command, if you wish to perform home return for the purpose of turning ON output 304 when “I/O parameter No. 50, Output function selection 304” is set to “1” (Output if all valid axes are at the home (= 0)) or “3” (Output if all valid axes are at the preset home coordinates).
If the operation is stopped or cancelled while a HOME command is being executed for an absolute-encoder axis in a mode other than the absolute reset mode provided by the PC software or teaching pendant, an “actual-position soft limit error” may generate depending on the position. It is not recommended to perform home return other than for the purpose of adjusting an absolute-encoder axis.

[Example 1]
```
HOME    1100        Axes 3 and 4 return to the home.
```

[Example 2] The axis pattern can be specified indirectly using a variable.
When the command in [Example 1] is rephrased based on indirect specification using a variable:
1100 (binary) → 12 (decimal)
```
LET     1       12      Assign 12 to variable 1.
HOME    *1
```

- MOVP (Move PTP by specifying position data)

Extension condition (LD, A, O, AB, OB)	Input condition (I/O, flag)	Command, declaration			Output (Output, flag)
		Command, declaration	Operand 1	Operand 2	
Optional	Optional	MOVP	Position number	Prohibited	PE

[Function] Move the actuator to the position corresponding to the position number specified in operand 1, without interpolation (PTP stands for “Point-to-Point”).
The output will turn OFF at the start of axis movement, and turn ON when the movement is complete.

[Example 1]

```
VEL   100
MOVP  1
```

Set the speed to 100 mm/s.
Move the axes to the position corresponding to position No. 1 (200, 100).

[Example 2]

```
VEL   100
LET   1    2
MOVP  *1
```

Set the speed to 100 mm/s.
Assign 2 to variable 1.
Move the axes to the position corresponding to the content of variable 1 (position No. 2, or (100, 100)).

No.	X-axis	Y-axis	Speed	Acceleration	Deceleration
1	200.000	100.000			
2	100.000	100.000			

(Note) If no acceleration or deceleration is specified in the position data table or using an ACC (DCL) command, the actuator will operate according to the default acceleration set in all-axis parameter No. 11 or default deceleration set in all-axis parameter No. 12.

Travel path from the home to the position corresponding to position No. 1 (200, 100)

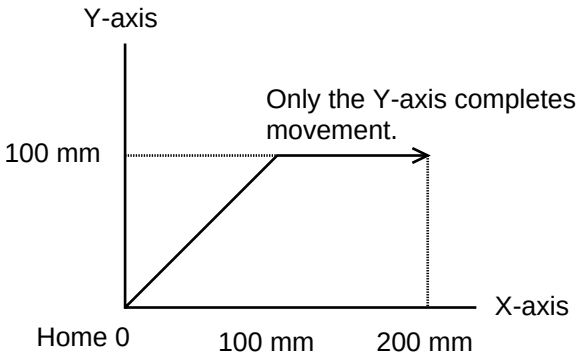

Each axis moves at 100 mm/s.

- MOVL (Move by specifying position data)

Extension condition (LD, A, O, AB, OB)	Input condition (I/O, flag)	Command, declaration			Output (Output, flag)
		Command, declaration	Operand 1	Operand 2	
Optional	Optional	MOVL	Position number	Prohibited	PE

[Function] Move the actuator to the position corresponding to the position number specified in operand 1, with interpolation.
The output will turn OFF at the start of axis movement, and turn ON when the movement is complete.

[Example 1]

```
VEL   100
MOVL  1
```

Set the speed to 100 mm/s.
Move the axes to the position corresponding to position No. 1 (200, 100), with interpolation.

[Example 2]

```
VEL   100
LET   1   2
MOVL  *1
```

Set the speed to 100 mm/s.
Assign 2 to variable 1.
Move the axes to the position corresponding to the content of variable 1 (position No. 2, or (100, 100)), with interpolation.

No.	X-axis	Y-axis	Speed	Acceleration	Deceleration
1	200.000	100.000			
2	100.000	100.000			

(Note) If no acceleration or deceleration is specified in the position data table or using an ACC (DCL) command, the actuator will operate according to the default acceleration set in all-axis parameter No. 11 or default deceleration set in all-axis parameter No. 12.

Travel path from the home to the position corresponding to position No. 1 (200, 100)

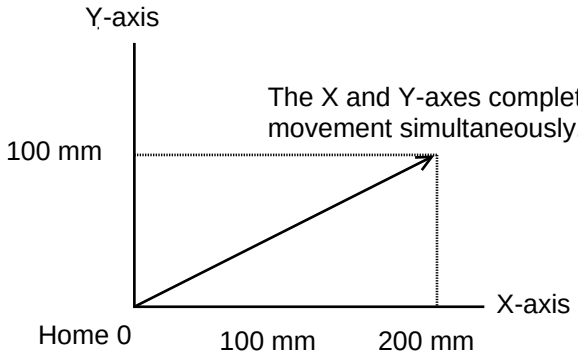

The X and Y-axes complete movement simultaneously.

The tip of each axis moves at 100 mm/s.

- MVPI (Move via incremental PTP)

Extension condition (LD, A, O, AB, OB)	Input condition (I/O, flag)	Command, declaration			Output (Output, flag)
		Command, declaration	Operand 1	Operand 2	
Optional	Optional	MVPI	Position number	Prohibited	PE

[Function] Move the actuator, without interpolation, from the current position by the travel distance corresponding to the position number specified in operand 1.
The output will turn OFF at the start of axis movement, and turn ON when the movement is complete.
Movement may not occur if the specified travel distance is below the resolution (1 pulse):
1 pulse: Lead [mm] / 16384 --- Standard product with a gear ratio of 1:1

[Example 1]

```
VEL   100
MVPI  1
```

Set the speed to 100 mm/s.
If the current position is (50, 50) and position No. 1 is set to (150, 100), the axes will move 150 in the X direction and 100 in the Y direction (200, 150) from the current position.

[Example 2]

```
VEL   100
LET   1    2
MVPI  *1
```

Set the speed to 100 mm/s.
Assign 2 to variable 1.
Move from the current position by the travel distance corresponding to the content of variable 1 (position No. 2, or (100, 100)).

No.	X-axis	Y-axis	Speed	Acceleration	Deceleration
1	150.000	100.000			
2	100.000	100.000			

Travel path from (50, 50) by the travel distance corresponding to position No. 1 (150, 100)

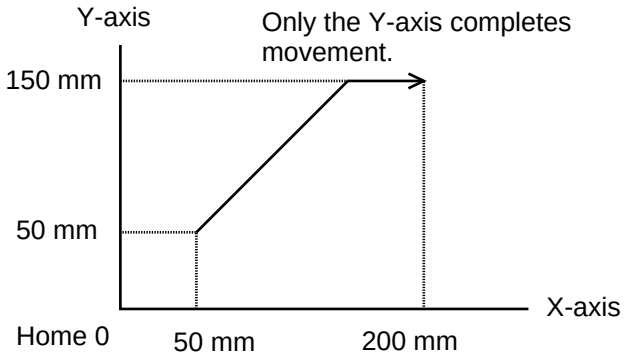

(Note) If no acceleration or deceleration is specified in the position data table or using an ACC (DCL) command, the actuator will operate according to the default acceleration set in all-axis parameter No. 11 or default deceleration set in all-axis parameter No. 12.

- MVLI (Move via incremental interpolation)

Extension condition (LD, A, O, AB, OB)	Input condition (I/O, flag)	Command, declaration			Output (Output, flag)
		Command, declaration	Operand 1	Operand 2	
Optional	Optional	MVLI	Position number	Prohibited	PE

[Function] Move the actuator, with interpolation, from the current position by the travel distance corresponding to the position number specified in operand 1.
The output will turn OFF at the start of axis movement, and turn ON when the movement is complete.
Movement may not occur if the specified travel distance is below the resolution (1 pulse):
1 pulse: Lead [mm] / 16384 --- Standard product with a gear ratio of 1:1

[Example 1]

```
VEL   100
MVLI  1
```

Set the speed to 100 mm/s.
If the current position is (50, 50) and position No. 1 is set to (150, 100), the axes will move 150 in the X direction and 100 in the Y direction (200, 150) from the current position, with interpolation.

[Example 2]

```
VEL   100
LET   1    2
MVLI  *1
```

Set the speed to 100 mm/s.
Assign 2 to variable 1.
Move from the current position by the travel distance corresponding to the content of variable 1 (position No. 2, or (100, 100)).

No.	X-axis	Y-axis	Speed	Acceleration	Deceleration
1	200.000	100.000			
2	100.000	100.000			

Travel path from (50, 50) by the travel distance corresponding to position No. 1 (150, 100)

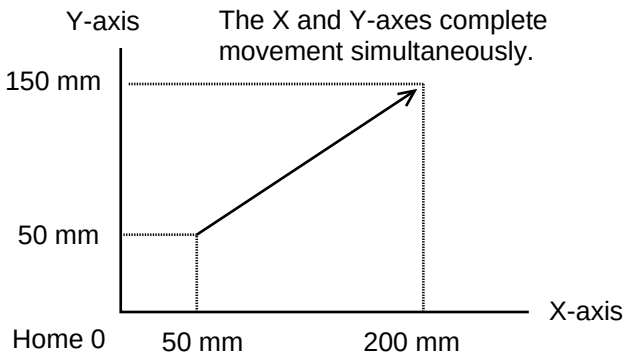

The tip of each axis moves at 100 mm/s.

(Note) If no acceleration or deceleration is specified in the position data table or using an ACC (DCL) command, the actuator will operate according to the default acceleration set in all-axis parameter No. 11 or default deceleration set in all-axis parameter No. 12.

● PATH (Move along path)

Extension condition (LD, A, O, AB, OB)	Input condition (I/O, flag)	Command, declaration			Output (Output, flag)
		Command, declaration	Operand 1	Operand 2	
Optional	Optional	PATH	Start position number	End position number	PE

[Function] Move continuously from the position specified in operand 1 to the position specified in operand 2.
The output type in the output field can be set using an actuator-declaration command POTP.
Increasing the acceleration will make the passing points closer to the specified positions.
If invalid data is set for any position number between the start and end position numbers, that position number will be skipped during continuous movement.

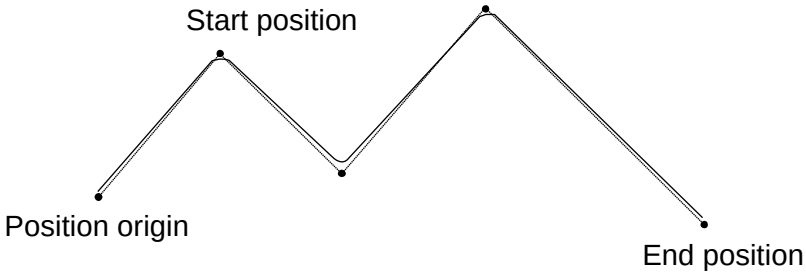

(Note 1) Multi-dimensional movement can be performed using a PATH command.
In this case, input in operand 1 the point number of the next target, instead of the predicted current position upon execution of the applicable command.
(Inputting a point number corresponding to the predicted current position will trigger movement to the same point during continuous movement, thereby causing the speed to drop.)

(Note 2) The actuator can be moved continuously along a series of continuous positions including one discontinuous position.
To do this, as shown in the example specify the position number corresponding to the discontinuous position as both the start position number and end position number of a PATH command. Position No. 6 is the discontinuous position in this example.
[Example] The actuator will move continuously along the path of position Nos. 1 → 2 → 3 → 4 → 6 → 9 → 10.

```
PATH   1   4
PATH   6   6    Discontinuous position
PATH   9   10
```

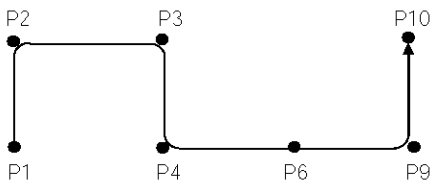

[Example 1]

```
VEL    100          Set the speed to 100 mm/s.
PATH   100   120    Move continuously from position Nos. 100 to 120.
```

[Example 2]

```
VEL    100          Set the speed to 100 mm/s.
LET    1     50     Assign 50 to variable 1.
LET    2     100    Assign 100 to variable 2.
PATH   *1    *2     Move continuously along the positions from the content of
                    variable 1 (position No. 50) to the content of variable 2
                    (position No. 100).
```

● J□W□ (Jog)

Extension condition (LD, A, O, AB, OB)	Input condition (I/O, flag)	Command, declaration			Output (Output, flag)
		Command, declaration	Operand 1	Operand 2	
Optional	Optional	J□W□	Axis pattern	Input, output, flag number	PE

[Function] The axes in the axis pattern specified in operand 1 will move forward or backward while the input or output port or flag specified in operand 2 is ON or OFF.

JBWF.....Move backward while the specified port is OFF.
JBWN.....Move backward while the specified port is ON.
JFWF.....Move forward while the specified port is OFF.
JFWN.....Move forward while the specified port is ON.

(Note 1) This command is also valid on an axis not yet completing home return. In this case, the maximum speed will be limited by “All-axis parameter No. 15, Maximum jog speed before home return.” Since coordinate values do not mean anything before home return, pay due attention to prevent contact with the stroke ends.

(Note 2) If an axis moving in accordance with JXWX has its “Axis-specific parameter No. 1, Axis operation type” set to “0” (Linear-movement axis) AND “Axis-specific parameter No. 68, Linear-movement mode selection” to “1” (Infinite-stroke mode*), the axis will operate based on an infinite stroke.
When infinite stroke is enabled, the current position will cycle between approx. –10 m and 10 m.
Any positioning command other than the above to a position exceeding a coordinate range from approx. –9990 to +9990 will generate an “Error No. CBE, Target-data boundary over error.”
Executing any positioning command other than the above outside a coordinate range from approx. –9990 to +9990 will also generate an “Error No. CC5, Positioning-boundary deviation error.”
(These errors generate because the user cannot recognize the operating direction reliably around the boundary. The current value may need to be reset using a HOME command, in conjunction with “Axis-specified parameter No. 10, Home-return method” being set to “1” (Current-position 0 home)).
When infinite stroke is enabled, be sure to perform a timeout check using other task or an external system.

The infinite-stroke mode can be specified only for an incremental-encoder axis.

[Example 1]

```
VEL    100          Set the speed to 100 mm/s.
JBWF   1100   10     Move axes 3 and 4 backward while input 10 is OFF.
```

[Example 2] The axis pattern can be specified indirectly using a variable.
When the command in [Example 1] is rephrased based on indirect specification using a variable:
1100 (binary) → 12 (decimal)

```
VEL    100          Set the speed to 100 mm/s.
LET    1      12    Assign 12 to variable 1.
JBWF   *1     10
```

[Example 3]

```
VEL    100          Set the speed to 100 mm/s.
LET    5      20    Assign 20 to variable 5.
JFWN   1010   *5    Move axes 2 and 4 forward while the content of variable 5
                    (input port 20), is ON.
```

- STOP (Stop movement)

Extension condition (LD, A, O, AB, OB)	Input condition (I/O, flag)	Command, declaration			Output (Output, flag)
		Command, declaration	Operand 1	Operand 2	
Optional	Optional	STOP	Axis pattern	Prohibited	CP

[Function] Decelerate and stop the axes specified by the axis pattern in operand 1.

(Note 1) A STOP command can be used with all active servo commands other than a SVOF command.

(Note 2) A STOP command only issues a deceleration-stop command (operation stop) to a specified axis pattern and does not wait for stopping to complete. Issuing other servo commands to a decelerating axis will either become invalid or generate an “axis duplication error,” etc.
Set a timer, etc., in the program so that the next servo command will be issued after a sufficient deceleration-stop processing time elapses.
Even when a STOP command is to be issued to an axis currently stopped, provide a minimum interval of 0.1 second before the next servo command is issued.

[Example 1]
```
STOP    1100        Decelerate and stop axes 3 and 4.
```

[Example 2] The axis pattern can be specified indirectly using a variable.
When the command in [Example 1] is rephrased based on indirect specification using a variable:
1100 (binary) → 12 (decimal)
```
LET     1       12      Assign 12 to variable 1.
STOP    *1
```

- PSPL (Move along spline)

Extension condition (LD, A, O, AB, OB)	Input condition (I/O, flag)	Command, declaration			Output (Output, flag)
		Command, declaration	Operand 1	Operand 2	
Optional	Optional	PSPL	Start position number	End position number	PE

[Function] Continuously move from the specified start position to end position via interpolation along a spline-interpolation curve.
The output type in the output field can be set using an actuator-declaration command POTP.
If invalid data is set for any position number between the start and end position numbers, that position number will be skipped during continuous movement.

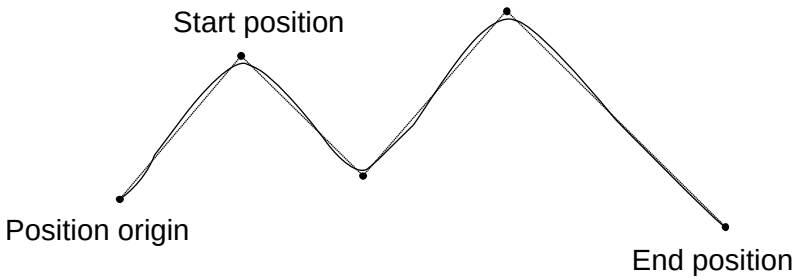

(The above diagram is only an example.)

(Note) If the acceleration and deceleration are different between points, the speeds will not be connected smoothly.

In this case, input in operand 1 the point number of the next target, instead of the predicted current position upon execution of the applicable command.
(Inputting a point number corresponding to the predicted current position will trigger movement to the same point during continuous movement, thereby causing the speed to drop.)

[Example]

```
VEL     100         Set the speed to 100 mm/s.
PSPL    100  120    Continuously move from position Nos. 100 to 120 along a
                    spline-interpolation curve.
```

- PUSH (Move by push motion)

Extension condition (LD, A, O, AB, OB)	Input condition (I/O, flag)	Command, declaration			Output (Output, flag)
		Command, declaration	Operand 1	Operand 2	
Optional	Optional	PUSH	Target position number	Prohibited	PE

[Function] Perform push-motion operation until the target position specified in operand 1 is reached. The axes move in a normal mode from the position origin to the push-motion approach start position as determined by a PAPR command, after which push-motion approach operation (toque-limiting operation) will be performed. The speed of push-motion approach operation (toque-limiting operation) is determined by the push-motion approach speed specified by a PAPR command. If the output field is specified, the output will turn ON when a contact is confirmed, and turn OFF when a missed contact is detected.

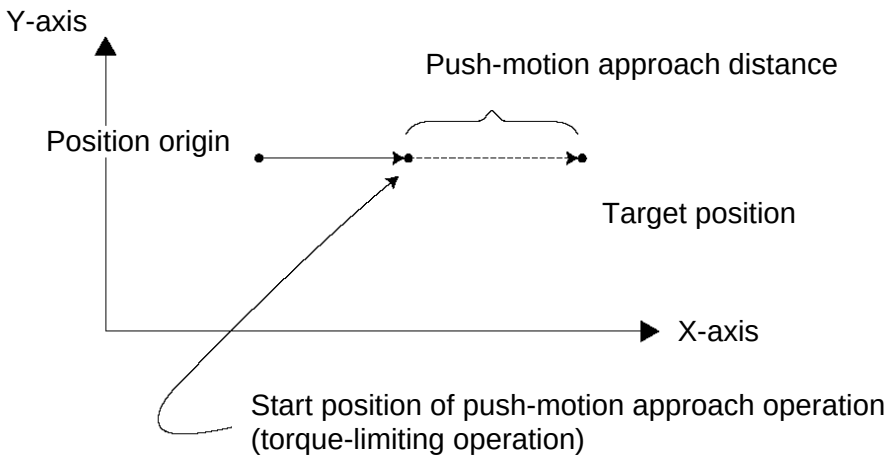

The push force can be adjusted using “Driver-card parameter No. 38, Push torque limit at positioning” (default value: 70%).

(Note 1) A PUSH command only moves a single axis. If multiple axes are specified, an “Error No. C91, Multiple push-axes specification error” will generate.

(Note 2) A push-motion approach speed exceeding the maximum speed permitted by the system will be clamped at the maximum speed. (The maximum system speed is not the maximum practical speed. Determine a practical speed by considering the impact upon contact, etc.)

(Note 3) Push-motion operation cannot be performed with a synchro controller.

[Example]

```
PAPR    100    20
MOVP    2
PUSH    10
```

Set the push-motion approach distance to 100 mm and push-motion approach speed to 20 mm/sec.
Move from the current position to position No. 2.
Perform push-motion movement from position Nos. 2 to 10.

The diagram below describes a push-motion movement based on the position data shown in the table below:

Position No.	Axis 1	Axis 2	Axis 3	Vel	Acc	Dcl
1	XXX.XXX	XXX.XXX	XXX.XXX	XXX	X.XX	X.XX
2	50.000	100.000	XXX.XXX	XXX	X.XX	X.XX
•						
•						
•						
•						
10	200.000			200	0.30	0.30
•						
•						

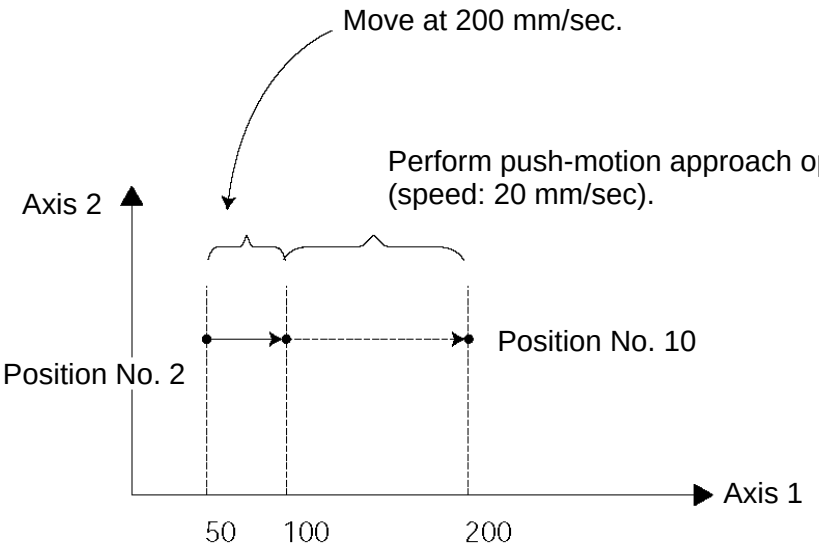

- PTRQ (Change push torque limit parameter)

Extension condition (LD, A, O, AB, OB)	Input condition (I/O, flag)	Command, declaration			Output (Output, flag)
		Command, declaration	Operand 1	Operand 2	
Optional	Optional	PTRQ	Axis pattern	Ratio	CC

[Function] Change the push torque limit parameter of the axis pattern specified in operand 1 to the value in operand 2. Operand 2 is set as an integer (unit: %).
A PTRQ command temporarily rewrites “Driver card parameter No. 38: Push torque limit at positioning.”

(Note 1) If a push torque limit is not set by a PTRQ command, the value set in “Driver card parameter No. 38: Push torque limit at positioning” will be used.
(Note 2) The new push torque limit will remain effective even after the program ends. Therefore, when building a system using the PTRQ command, in every program explicitly specify a push torque limit using a PTRQ command before each push-motion operation. Assuming that the push torque limit will be reset to the original value when push-motion operation ends in one program can cause an unexpected problem in another program, because a different push torque limit will be used if the program is aborted due to an error, etc.
(Note 3) The new value set by a PTRQ command will become ineffective after a power-on reset or software reset.
(Note 4) A PTRQ command does not rewrite “Driver card parameter No. 38: Push torque limit at positioning” (main CPU flash memory (non-volatile memory)).

[Example]

PTRQ	100	50	Change the push torque limit parameter for axis 3 to 50%.
PAPR	100	20	Set the push-motion approach distance to 100 mm and the push-motion approach speed to 20 mm/sec.
MOVP	2		Move to position No. 2.
PUSH	10		Move by push motion from position No. 2 to position No. 10.

● CIR2 (Move along circle 2 (arc interpolation))

Extension condition (LD, A, O, AB, OB)	Input condition (I/O, flag)	Command, declaration			Output (Output, flag)
		Command, declaration	Operand 1	Operand 2	
Optional	Optional	CIR2	Passing position 1 number	Passing position 2 number	PE

[Function] Move along a circle originating from the current position and passing positions 1 and 2, via arc interpolation.
The rotating direction of the circle is determined by the given position data.
The diagram below describes a CW (clockwise) movement. Reversing passing positions 1 and 2 will change the direction of movement to CCW (counterclockwise).

The speed and acceleration will take valid values based on the following priorities:

Priority	Speed	Acceleration (deceleration)
1	Setting in the position data specified in operand 1	Setting in the position data specified in operand 1
2	Setting by VEL command	Setting by ACC (DCL) command
3		Default acceleration in all-axis parameter No. 11 (Default deceleration in all-axis parameter No. 12)

If speed is not set, a “C88 speed specification error” will generate.
If acceleration/deceleration is not valid, a “C89 acceleration/deceleration specification error” will generate.

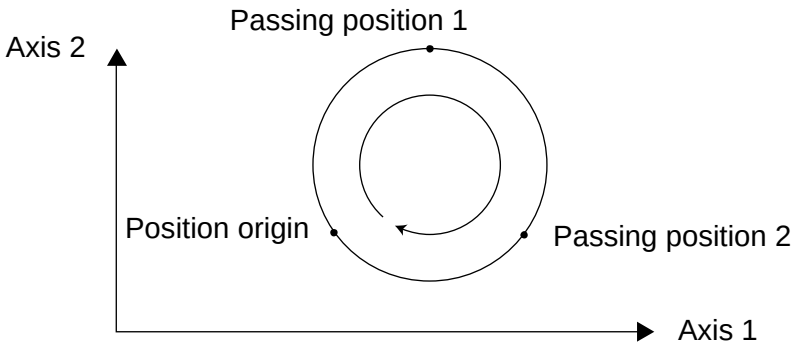

(Note) This command is valid on arbitrary orthogonal planes. (Axis 2 may be selected automatically prior to axis 1 in accordance with the position data.)

[Example]

```
VEL     100          Set the speed to 100 mm/s.
CIR2    100  101     Move along a circle (circular interpolation) passing position
                     Nos. 100 and 101.
```

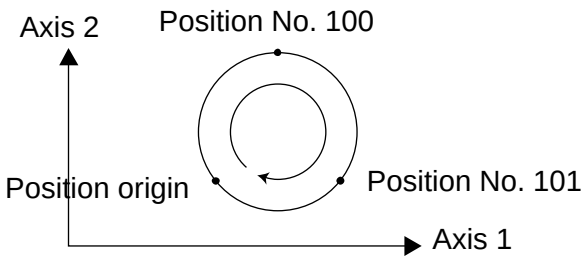

- ARC2 (Move along circle 2 (arc interpolation))

Extension condition (LD, A, O, AB, OB)	Input condition (I/O, flag)	Command, declaration			Output (Output, flag)
		Command, declaration	Operand 1	Operand 2	
Optional	Optional	ARC2	Passing position number	End position number	PE

[Function] Move along an arc originating from the current position, passing the specified position and terminating at the end position, via arc interpolation.

The speed and acceleration will take valid values based on the following priorities:

Priority	Speed	Acceleration (deceleration)
1	Setting in the position data specified in operand 1	Setting in the position data specified in operand 1
2	Setting by VEL command	Setting by ACC (DCL) command
3		Default acceleration in all-axis parameter No. 11 (Default deceleration in all-axis parameter No. 12)

If speed is not set, a “C88 speed specification error” will generate.
If acceleration/deceleration is not valid, a “C89 acceleration/deceleration specification error” will generate.

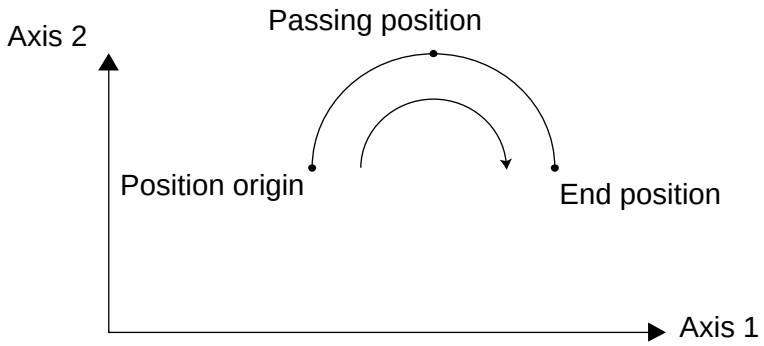

(Note) This command is valid on arbitrary orthogonal planes. (Axis 2 may be selected automatically prior to axis 1 in accordance with the position data.)

[Example]

```
VEL    100
ARC2   100   101
```

Set the speed to 100 mm/s.
Move along an arc (circular interpolation) from the current position to position No. 101 by passing position No. 100.

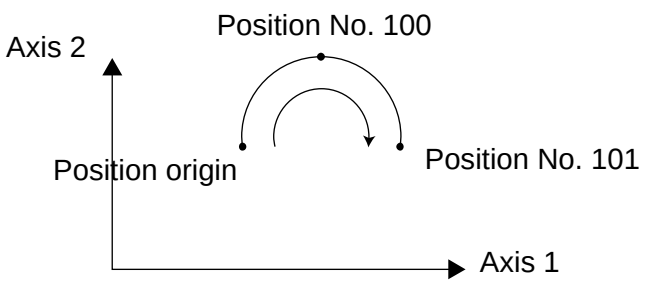

- CIRS (Move three-dimensionally along circle)

Extension condition (LD, A, O, AB, OB)	Input condition (I/O, flag)	Command, declaration			Output (Output, flag)
		Command, declaration	Operand 1	Operand 2	
Optional	Optional	CIRS	Passing position 1 number	Passing position 2 number	PE

[Function] Move along a circle (three-dimensional movement) originating from the current position and passing positions 1 and 2 sequentially.
The rotating direction of the circle is determined by the given position data.
The movement in the diagram below will be performed in the reverse direction if passing positions 1 and 2 are reversed.

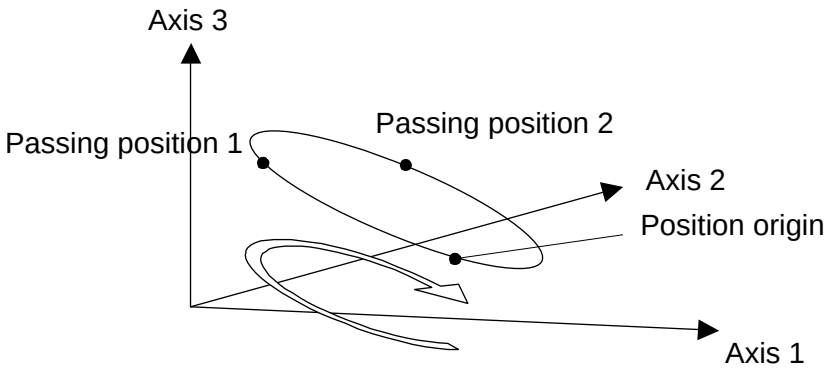

The speed and acceleration will take valid values based on the following priorities:

Priority	Speed	Acceleration	Deceleration
1	Setting in the position data specified in operand 1	Setting in the position data specified in operand 1	Same as the valid acceleration value
2	Setting by VEL command	Setting by ACC command	
3		Default acceleration in all-axis parameter No. 11	

If speed is not set, a “C88 speed specification error” will generate.
If acceleration/deceleration is not valid, a “C89 acceleration/deceleration specification error” will generate.

(Note 1) This command is valid on arbitrary planes in a three-dimensional space. (Axis 2 (if there are only two valid axes) or axis 3 may be selected automatically prior to axis 1 in accordance with the position data.)

(Note 2) The locus tends to shift inward as the speed increases. Minor adjustment, such as setting the position data slightly outward, may be required.

(Note 3) If the circle diameter is small with respect to the set speed, the speed may be limited. (Increasing the acceleration/deceleration will reduce the speed limitation, but they must not exceed the range permitted by the actuator.)

- ARCS (Move three-dimensionally along arc)

Extension condition (LD, A, O, AB, OB)	Input condition (I/O, flag)	Command, declaration			Output (Output, flag)
		Command, declaration	Operand 1	Operand 2	
Optional	Optional	ARCS	Passing position number	End position number	PE

[Function] Move along an arc (three-dimensional movement) originating from the current position, passing the specified position and terminating at the end position.

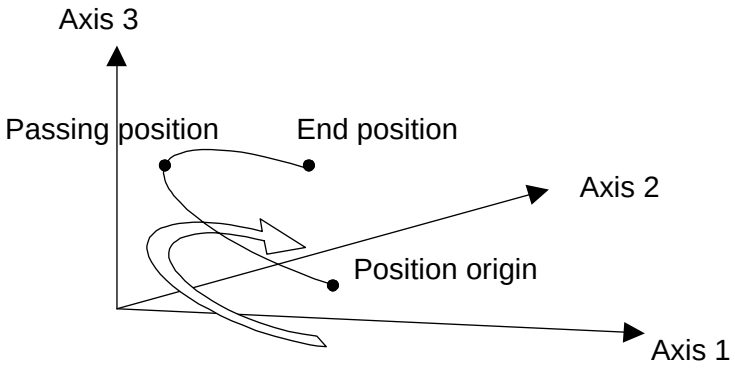

The speed and acceleration will take valid values based on the following priorities:

Priority	Speed	Acceleration	Deceleration
1	Setting in the position data specified in operand 1	Setting in the position data specified in operand 1	Same as the valid acceleration value
2	Setting by VEL command	Setting by ACC command	
3		Default acceleration in all-axis parameter No. 11	

If speed is not set, a “C88 speed specification error” will generate.
If acceleration/deceleration is not valid, a “C89 acceleration/deceleration specification error” will generate.

(Note 1) This command is valid on arbitrary planes in a three-dimensional space. (Axis 2 (if there are only two valid axes) or axis 3 may be selected automatically prior to axis 1 in accordance with the position data.)

(Note 2) The locus tends to shift inward as the speed increases. Minor adjustment, such as setting the position data slightly outward, may be required.

(Note 3) If the arc diameter is small with respect to the set speed, the speed may be limited. (Increasing the acceleration/deceleration will reduce the speed limitation, but they must not exceed the range permitted by the actuator.)

● CHVL (Change speed)

Extension condition (LD, A, O, AB, OB)	Input condition (I/O, flag)	Command, declaration			Output (Output, flag)
		Command, declaration	Operand 1	Operand 2	
Optional	Optional	CHVL	Axis pattern	Speed	CP

[Function] Change the speed of the axes operating in other task.
When a CHVL command is executed, the speed of the axes specified in operand 1 will change to the value specified in operand 2.

(Note 1) This command is not valid on an axis operated by a CIR, ARC, PSPL, PUSH, ARCH, PACH, CIRS or ARCS command.

(Note 2) Executing a CHVL command for an axis operating in sigmoid motion (SCRV command) will generate an "Error No. CC1, Speed-change condition error."

(Note 3) This is a temporary speed-change command issued from other task to the active packet (point). It is not affected by the data declared by VEL.

Program 1	Program 2
	VEL 300
	•
	•
	MOVP 1
CHVL 111 100	MOVP 2
	MOVP 3
	•
	•

If CHVL is executed in program 1 while MOVP 2 is executed in program 2, the travel speed of MOVP 2 will become 100 mm/sec.
The speeds of other move commands will remain 300 mm/sec.

The axis pattern can be specified indirectly using a variable.
When program 1 is rephrased based on indirect specification using a variable:
111 (binary) → 7 (decimal)

```
LET     1     7       Assign 7 to variable 1.
CHVL    *1    100
```

(Note 4) Since this command is valid only for the packet that is active at the time of execution of the command for an axis subject to continuous motion in a PATH command, etc., caution must be exercised against the timing shift. The packet handling will be put on hold during speed-change processing, so caution must also be exercised against the locus shift.

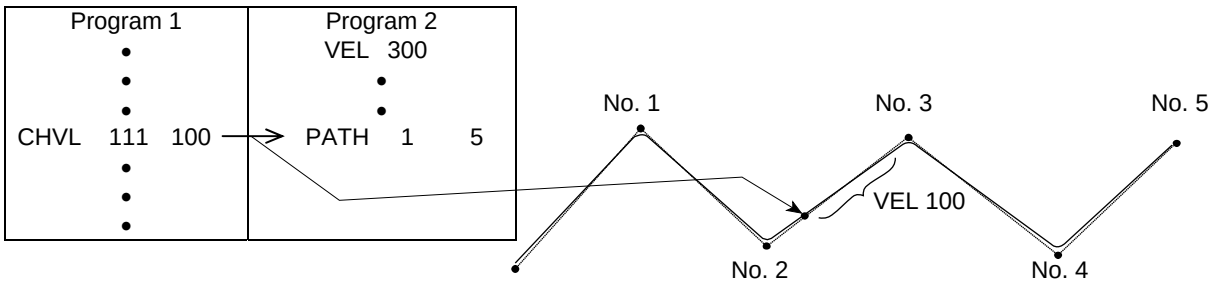

If CHVL is executed in program 1 while PATH is executed in program 2, or specifically during the PATH movement from point No. 2 to point No. 3, the speed specified by CHVL (100 mm/sec in the above example) will become valid only during the PATH movement to point No. 3. Other travel speeds will remain at the speed specified by VEL (300 mm/sec in the above example).

(Note 5) Override of the CHVL call task will be applied, so caution must be exercised.

(Note 6) The maximum speed of the specified axis completing home return will be clamped by the minimum value set in "Axis-specific parameter No. 28, Maximum operating speed of each axis" or "Axis-specific parameter No. 27, Maximum speed limited by maximum motor speed" with respect to the specified axis and related interpolation axes currently operating. To prevent the maximum speed from being limited due to the effect of other axis whose maximum speed is lower than the speed specified in the CHVL command, issue a CHVL command in multiple steps corresponding to the respective axes having different maximum speeds. In particular, specification of a CHVL command in a separate step is recommended for a rotating axis.

[Example]

```
CHVL    1111    500    ⇒    CHVL    111     500
                            CHVL    1000    500
```

- ARCD (Move along arc via specification of end position and center angle (arc interpolation))

Extension condition (LD, A, O, AB, OB)	Input condition (I/O, flag)	Command, declaration			Output (Output, flag)
		Command, declaration	Operand 1	Operand 2	
Optional	Optional	ARCD	End position number	Center angle	PE

[Function] Move along an arc originating from the current position and terminating at the end position, via arc interpolation.
Specify the end position of movement in operand 1, and the center angle formed by the position origin and end position in operand 2. The center angle is set in a range from –359.999 to –0.001 or from 0.001 to 359.999. A positive value indicates CCW (counterclockwise) movement, while a negative value indicates CW (clockwise) movement. The center angle is set in degrees and may include up to three decimal places.

The speed and acceleration will take valid values based on the following priorities:

Priority	Speed	Acceleration (deceleration)
1	Setting in the position data specified in operand 1	Setting in the position data specified in operand 1
2	Setting by VEL command	Setting by ACC (DCL) command
3		Default acceleration in all-axis parameter No. 11 (Default deceleration in all-axis parameter No. 12)

If speed is not set, a “C88 speed specification error” will generate.
If acceleration/deceleration is not valid, a “C89 acceleration/deceleration specification error” will generate.

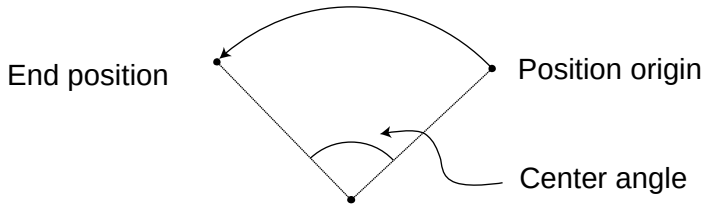

(Note 1) The rotating direction of actual operation locus may vary depending on the installation method of each axis, how axes are combined, and so on. Always check the rotating direction by test operation.
(Note 2) This command is valid on arbitrary orthogonal planes. (Axis 2 may be selected automatically prior to axis 1 in accordance with the position data.)

[Example]

```
VEL   100          Set the speed to 100 mm/s.
ARCD  100  120     Move along an arc from the position origin to position No.
                   100 for a center angle of 120 degrees (CCW direction).
```

- ARCC (Move along arc via specification of center position and center angle (arc interpolation))

Extension condition (LD, A, O, AB, OB)	Input condition (I/O, flag)	Command, declaration			Output (Output, flag)
		Command, declaration	Operand 1	Operand 2	
Optional	Optional	ARCC	Center position number	Center angle	PE

[Function] Move along an arc originating from the current position by keeping a specified radius from the center position, via arc interpolation.
Specify the center position in operand 1, and the center angle formed by the position origin and end position in operand 2. The center angle is set in a range from –3600 to 3600 degrees (±10 revolutions). A positive value indicates CCW (counterclockwise-direction) movement, while a negative value indicates CW (clockwise-direction) movement (setting unit: degree). The center angle is set in degrees and may include up to three decimal places.

The speed and acceleration will take valid values based on the following priorities:

Priority	Speed	Acceleration (deceleration)
1	Setting in the position data specified in operand 1	Setting in the position data specified in operand 1
2	Setting by VEL command	Setting by ACC (DCL) command
3		Default acceleration in all-axis parameter No. 11 (Default deceleration in all-axis parameter No. 12)

If speed is not set, a “C88 speed specification error” will generate.
If acceleration/deceleration is not valid, a “C89 acceleration/deceleration specification error” will generate.

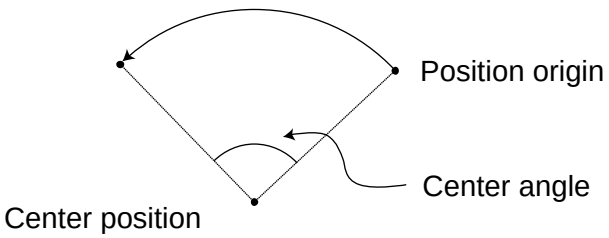

(Note 1) The rotating direction of actual operation locus may vary depending on the installation method of each axis, how axes are combined, and so on. Always check the rotating direction by test operation.

(Note 2) This command is valid on arbitrary orthogonal planes. (Axis 2 may be selected automatically prior to axis 1 in accordance with the position data.)

[Example]

```
VEL     100          Set the speed to 100 mm/s.
ARCC    100  120     Move along an arc from the position origin for a center angle
                     of 120 degrees around position No. 100 being the center
                     (CCW direction).
```

● PBND (Set positioning band)

Extension condition (LD, A, O, AB, OB)	Input condition (I/O, flag)	Command, declaration			Output (Output, flag)
		Command, declaration	Operand 1	Operand 2	
Optional	Optional	PBND	Axis pattern	Distance	CP

[Function] Set the position complete width for the axes in the axis pattern specified in operand 1. The distance in operand 2 is set in mm.
As a rule, positioning is deemed complete when all command pulses have been output and the current position is inside the positioning band. Therefore, this command is effective if you wish to reduce the tact time by shortening the approximate positioning settling time. (Normally a setting of approx. 3 to 5 mm will have effect, but the effect must be confirmed on the actual machine.)
(This command can be combined with a QRTN command for special purposes. Refer to the section on QRTN command for details.)

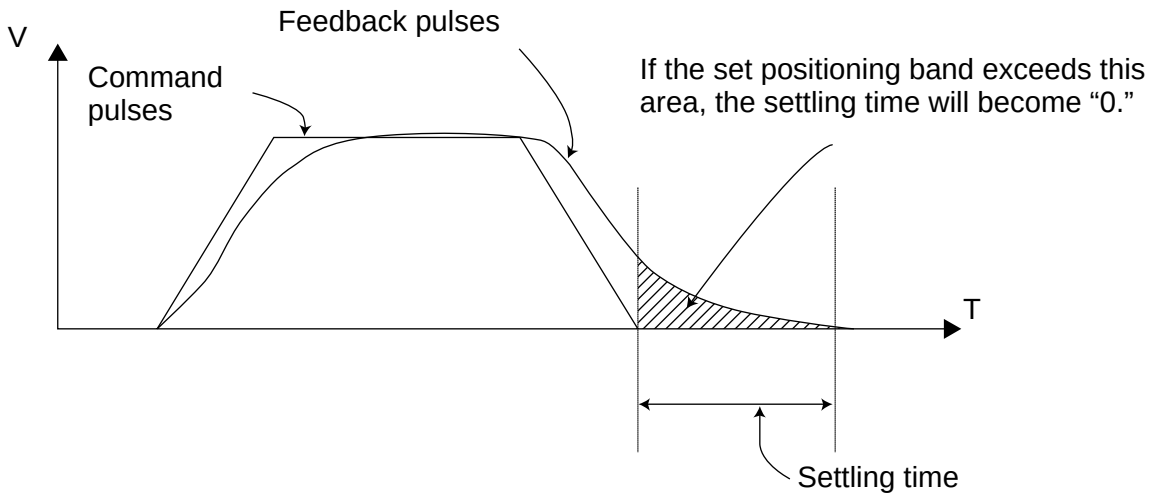

(Note 1) If positioning band is not set with a PBND command, the value set in “Axis-specific parameter No. 58, Positioning band” will be used.

(Note 2) If the positioning band is changed, the new setting will remain valid even after the program ends. Therefore, to build a system using PBND commands, a positioning band must be expressly specified with a PBND command before operation of each program. An assumption that the positioning band will be reset to the original value when the operation ends in other program may lead to an unexpected problem, because the positioning band will become different from what is anticipated in case the applicable program is aborted due to error, etc.

(Note 3) The value set in “Axis-specific parameter No. 58, Positioning band” will not be written by a PBND command.

[Example 1]

```
PBND    11    5      Set the positioning band for axes 1 and 2 to 5 mm after this
                     command.
```

[Example 2] The axis pattern can be specified indirectly using a variable.
When the command in [Example 1] is rephrased based on indirect specification using a variable:
11 (binary) → 3 (decimal)

```
LET     1     3      Assign 3 to variable 1.
PBND    *1    5
```

- CIR (Move along circle)

Extension condition (LD, A, O, AB, OB)	Input condition (I/O, flag)	Command, declaration			Output (Output, flag)
		Command, declaration	Operand 1	Operand 2	
Optional	Optional	CIR	Passing position 1 number	Passing position 2 number	PE

[Function] Move along a circle originating from the current position and passing the positions specified in operands 1 and 2.
Therefore, reversing the settings of operands 1 and 2 will implement a circular movement in the reverse direction.
The output will turn OFF at the start of circular movement, and turn ON when the movement is complete.
Difference from CIR2:
CIR processing resembles moving along a polygon with a PATH command, while CIR2 actually performs arc interpolation.
Select an applicable command by considering the characteristics of each command. (Normally CIR2 is used.)

(Note 1) If the division angle is set to “0” with a DEG command (division angle is calculated automatically based on priority speed setting), the speed set in the data at passing position 1 or speed set by a VEL command will be used (former is given priority). The speed set in the data at passing position 2 will have no meaning.

(Note 2) If the division angle is set to a value other than “0” with a DEG command (normal division angle), the speed specified in the target position data will be used. (The speed set by a VEL command will become valid if position data is not specified.)
In the case of circular movement, the axes will return from passing position 2 to the start position at the speed declared by a VEL command. Therefore, a VEL command must always be used with a CIR command.

(Note 3) The acceleration is selected in the order of the acceleration in the data at passing position 1, followed by the value in “All-axis parameter No. 11, Default acceleration.”
The deceleration will become the same value as the valid acceleration selected above.
Therefore, the deceleration in the data at passing position 1 and the acceleration/deceleration in the data at passing position 2 will not have any meaning.

(Note 4) This command is valid on arbitrary orthogonal planes. (Axis 2 may be selected automatically prior to axis 1 in accordance with the position data.)

[Example 1]

VEL	100		Set the speed to 100 mm/s.
CIR	100	101	Move along a circle from the current position by passing positions 100 and 101 sequentially.

[Example 2]

VEL	100		Set the speed to 100 mm/s.
LET	1	5	Assign 5 to variable 1.
LET	2	6	Assign 6 to variable 2.
CIR	*1	*2	Move along a circle from the current position by passing the contents of variables 1 and 2 (positions 5 and 6) sequentially.

- ARC (Move along arc)

Extension condition (LD, A, O, AB, OB)	Input condition (I/O, flag)	Command, declaration			Output (Output, flag)
		Command, declaration	Operand 1	Operand 2	
Optional	Optional	ARC	Passing position number	End position number	PE

[Function] Move along an arc from the current position to the position specified in operand 2, by passing the position specified in operand 1.
The output will turn OFF at the start of arc movement, and turn ON when the movement is complete.
Difference from ARC2:
ARC processing resembles moving along a polygon with a PATH command, while ARC2 actually performs arc interpolation.
Select an applicable command by considering the characteristics of each command. (Normally ARC2 is used.)

(Note 1) If the division angle is set to “0” with a DEG command (division angle is calculated automatically based on priority speed setting), the speed set in the data at passing position 1 or speed set by a VEL command will be used (former is given priority). The speed set in the data at passing position 2 will have no meaning.
(Note 2) If the division angle is set to a value other than “0” with a DEG command (normal division angle), the speed specified in the target position data will be used. (The speed set by a VEL command will become valid if position data is not specified.)
(Note 3) The acceleration is selected in the order of the acceleration in the data at passing position 1, followed by the value in “All-axis parameter No. 11, Default acceleration.”
The deceleration will become the same value as the valid acceleration selected above. Therefore, the deceleration in the data at passing position 1 and the acceleration/deceleration in the data at passing position 2 will not have any meaning.
(Note 4) This command is valid on arbitrary orthogonal planes. (Axis 2 may be selected automatically prior to axis 1 in accordance with the position data.).

[Example 1]

VEL	100		Set the speed to 100 mm/s.
ARC	100	101	Move along an arc from the current position to position 101 by passing position 100.

[Example 2]

VEL	100		Set the speed to 100 mm/s.
LET	1	5	Assign 5 to variable 1.
LET	2	6	Assign 6 to variable 2.
ARC	*1	*2	Move along an arc from the current position to the content of variable 2 (position 6) by passing the content of variable 1 (position 5).

1.13 Structural IF

- IF□□ (Structural IF)

Extension condition (LD, A, O, AB, OB)	Input condition (I/O, flag)	Command, declaration			Output (Output, flag)
		Command, declaration	Operand 1	Operand 2	
Optional	Optional	IF□□	Variable number	Data	CP

[Function] Compare the content of the variable specified in operand 1 with the value specified in operand 2, and proceed to the next step if the condition is satisfied.
If the condition is not satisfied, the program will proceed to the step next to the corresponding ELSE command, if any, or to the step next to the corresponding EDIF command.
If the input condition is not satisfied and the IF□□ command is not executed, the program will proceed to the step next to the corresponding EDIF.
A maximum of 15 nests are supported when IS□□ and DW□□ are combined.

IF□□
- EQ ..... Operand 1 = Operand 2
- NE ..... Operand 1 ≠ Operand 2
- GT ..... Operand 1 > Operand 2
- GE ..... Operand 1 ≥ Operand 2
- LT ..... Operand 1 < Operand 2
- LE ..... Operand 1 ≤ Operand 2

[Example 1]

```
600   IFEQ   1   1   Select an axis.
      IFGE   2   0   Select a moving direction.
      JFWN   01  5   Move axis 1 forward.
      ELSE
      JBWN   01  5   Move axis 1 backward.
      EDIF
      ELSE
      IFLT   2   0   Select a moving direction.
      JBWN   10  5   Move axis 2 backward.
      ELSE
      JFWN   10  5   Move axis 2 forward.
      EDIF
EDIF
```

Jog by selecting axis 1/axis 2 by variable 1 and forward/backward (+/–) by variable 2.
Nothing will happen if flag 600 is OFF, in which case the program will proceed to the step next to the last EDIF.

(Note) Using a GOTO command to branch out of or into an IF□□-EDIF syntax is prohibited.

- IS□□ (Compare strings)

Extension condition (LD, A, O, AB, OB)	Input condition (I/O, flag)	Command, declaration			Output (Output, flag)
		Command, declaration	Operand 1	Operand 2	
Optional	Optional	IS□□	Column number	Column number, character literal	CP

[Function] Compare the character strings in the columns specified in operands 1 and 2, and proceed to the next step if the condition is satisfied.
If the condition is not satisfied, the program will proceed to the step next to the corresponding ELSE command, if any, or to the step next to the corresponding EDIF command.
Comparison will be performed for the length set by a SLEN command.
If a character literal is specified in operand 2, comparison will be performed for the entire length of the literal.
If the input condition is not satisfied and the IS□□ command is not executed, the program will proceed to the step next to the EDIF.
A maximum of 15 nests are supported when IF□□ and DW□□ are combined.

IS□□
- EQ ..... Operand 1 = Operand 2
- NE ..... Operand 1 ≠ Operand 2

[Example 1]

```
        SCPY  10  'GOFD' (Move forward)
        SCPY  14  'GOBK' (Move backward)
        LET   1   5
        LET   2   14
        SLEN  4                  Set the number of comparing characters to 4.
600     ISEQ  1   '1AXS' (Axis 1) Select an axis.
        ISEQ  5   10             Select a moving direction.
        JFWN  01  5              Move axis 1 forward.
        ELSE
        JBWN  01  5              Move axis 1 backward.
        EDIF
        ELSE
        ISNE  *1  *2             Select a moving direction.
        JFWN  10  5              Move axis 2 backward.
        ELSE
        JBWN  10  5              Move axis 2 forward.
        EDIF
        EDIF
```

Jog by selecting axis 1/axis 2 by columns 1 to 4 and forward/backward by columns 5 to 8.
Nothing will happen if flag 600 is OFF, in which case the program will proceed to the step next to the last EDIF.
If columns 1 to 8 contain the following data, axis 1 will be moved forward.

1 2	3 4	5 6	7 8	
1A	XS	GO	FD	

(Note) Using a GOTO command to branch out of or into an IS□□-EDIF syntax is prohibited.

● ELSE (Else)

Extension condition (LD, A, O, AB, OB)	Input condition (I/O, flag)	Command, declaration			Output (Output, flag)
		Command, declaration	Operand 1	Operand 2	
Prohibited	Prohibited	ELSE	Prohibited	Prohibited	CP

[Function] An ELSE command is used arbitrarily in conjunction with an IF□□ or IS□□ command to declare the command part to be executed when the condition is not satisfied.

[Example 1] Refer to the sections on IF□□ and IS□□.

● EDIF (End IF□□)

Extension condition (LD, A, O, AB, OB)	Input condition (I/O, flag)	Command, declaration			Output (Output, flag)
		Command, declaration	Operand 1	Operand 2	
Prohibited	Prohibited	EDIF	Prohibited	Prohibited	CP

[Function] Declare the end of an IF□□ or IS□□ command.

[Example 1] Refer to the sections on IF□□ and IS□□.

1.14 Structural DO

- DW□□ (DO WHILE)

Extension condition (LD, A, O, AB, OB)	Input condition (I/O, flag)	Command, declaration			Output (Output, flag)
		Command, declaration	Operand 1	Operand 2	
Optional	Optional	DW□□	Variable number	Data	CP

[Function] Compare the content of the variable specified in operand 1 with the value specified in operand 2, and execute the subsequent commands up to EDDO while the condition is satisfied.
The program will proceed to the step next to the corresponding EDDO if the condition is no longer satisfied.
A LEAV command can be used to forcibly end a loop.
If the input condition is not satisfied and the DW□□ command is not executed, the program will proceed to the step next to the corresponding EDDO.
A maximum of 15 nests are supported when IF□□ and IS□□ are combined.

DW□□
- EQ ..... Operand 1 = Operand 2
- NE ..... Operand 1 ≠ Operand 2
- GT ..... Operand 1 > Operand 2
- GE ..... Operand 1 ≥ Operand 2
- LT ..... Operand 1 < Operand 2
- LE ..... Operand 1 ≤ Operand 2

[Example 1]
```
008   DWEQ   1   0     Repeat the command up to an EDDO command while
                       variable 1 contains “0.”
        :
        :
      EDDO
```

If DW□□ is specified at the start and input 8 is OFF, nothing will occur and the program will proceed to the step next to EDDO.

(Note) Using a GOTO command to branch out of or into a DW□□-EDDO syntax is prohibited.

- LEAV (Pull out of DO WHILE)

Extension condition (LD, A, O, AB, OB)	Input condition (I/O, flag)	Command, declaration			Output (Output, flag)
		Command, declaration	Operand 1	Operand 2	
Optional	Optional	LEAV	Prohibited	Prohibited	CP

[Function] Pull out of a DO□□ loop and proceed to the step next to EDDO.

[Example 1]
```
        DWEQ   1   0     Repeat the commands up to an EDDO command while
                         variable 1 contains ‘0.”
          :
600     LEAV             Forcibly end the loop if flag 600 is ON and proceed to
                         the step next to an EDDO command.
          :
        EDDO
```

- ITER (Repeat)

Extension condition (LD, A, O, AB, OB)	Input condition (I/O, flag)	Command, declaration			Output (Output, flag)
		Command, declaration	Operand 1	Operand 2	
Optional	Optional	ITER	Prohibited	Prohibited	CP

[Function] Forcibly switch the control to EDDO while in a DO□□ loop.

[Example 1]

```
        DWEQ    1    0
          :
600     ITER
          :
        EDDO
```

Repeat the commands up to an EDDO command while variable 1 contains “0.”

Forcibly switch the control to an EDDO command and perform end judgment, if flag 600 is ON.

- EDDO (End DO WHILE)

Extension condition (LD, A, O, AB, OB)	Input condition (I/O, flag)	Command, declaration			Output (Output, flag)
		Command, declaration	Operand 1	Operand 2	
Prohibited	Prohibited	EDDO	Prohibited	Prohibited	CP

[Function] Declare the end of a loop that began with DW□□.
If the DW□□ condition is not satisfied, the program will proceed to the step next to this command.

[Example 1] Refer to the section on DW□□.

1.15 Multi-Branching

- SLCT (Start selected group)

Extension condition (LD, A, O, AB, OB)	Input condition (I/O, flag)	Command, declaration			Output (Output, flag)
		Command, declaration	Operand 1	Operand 2	
Optional	Optional	SLCT	Prohibited	Prohibited	CP

[Function] Branch to the step next to any WH□□ or WS□□ command that exists before an EDSL command and whose condition is satisfied, or to the step next to an OTHE command if none of the conditions are satisfied.
A SLCT command must be followed by a WH□□, WS□□ or EDSL command.
A maximum of 15 nests are supported.

(Note) Using a GOTO command to branch out of the SLCT-EDSL syntax or to other branching processing within the syntax is prohibited.

[Example 1]

```
        SCPY   1   'Right'   Assign 'right' to columns 1 and 2.
          :
600     SLCT                 Jump to a WXXX whose condition is satisfied.
        WSEQ   1   'Right'   If 'right' is stored in columns 1 and 2, this command will
          :                  be executed.
        WSEQ   1   'Left'    If 'left' is stored, this command will be executed.
          :
        OTHE                 If the content of columns 1 and 2 is neither of the above,
          :                  this command will be executed.
        EDSL                 If flag 600 is OFF, the processing will move here upon
                             execution of any of the conditions.
```

● WH□□ (Select if true; variable)

Extension condition (LD, A, O, AB, OB)	Input condition (I/O, flag)	Command, declaration			Output (Output, flag)
		Command, declaration	Operand 1	Operand 2	
Prohibited	Prohibited	WH□□	Variable number	Data	CP

[Function] This command is used between SLCT and EDSL commands to execute the subsequent commands up to the next W□□□ command or an OTHE or EDSL command when the comparison result of the content of the variable specified in operand 1 with the value specified in operand 2 satisfies the condition.

WH□□
- EQ ..... Operand 1 = Operand 2
- NE ..... Operand 1 ≠ Operand 2
- GT ..... Operand 1 > Operand 2
- GE ..... Operand 1 ≥ Operand 2
- LT ..... Operand 1 < Operand 2
- LE ..... Operand 1 ≤ Operand 2

[Example 1]

LET	1	20	Assign 20 to variable 1.
LET	2	10	Assign 10 to variable 2.
:			
SLCT			Execute multi-branching.
WHEQ	1	10	(1) will be executed if the content of variable 1 is 10.
:			Since variable 1 contains 20, however, the next
(1)			condition will be referenced.
:			
WHGT	1	*2	This command will be executed if the content of variable
:			1 is greater than the content of variable 2.
(2)			Since variable 1 (= 20) > variable 2 (=10), (2) will be executed.
OTHE			This command will be executed if none of the conditions
:			are satisfied. In this example, since (2) was executed,
(3)			(3) will not be executed.
:			The processing will move here if any of the conditions
EDSL			were satisfied and the applicable command executed. In
:			this example, (2) and (4) will be executed.
(4)			
:			

* If multiple conditions are likely to be satisfied, remember that the first W□□□ will become valid and any subsequent commands will not be executed. Therefore, state from the command with the most difficult condition or highest priority.

● WS□□ (Select if true; character)

Extension condition (LD, A, O, AB, OB)	Input condition (I/O, flag)	Command, declaration			Output (Output, flag)
		Command, declaration	Operand 1	Operand 2	
Prohibited	Prohibited	WS□□	Column number	Column number, character literal	CP

[Function] This command is used between SLCT and EDSL commands to execute the subsequent commands up to the next W□□□ command or an OTHE or EDSL command when the comparison result of the character strings in the columns specified in operands 1 and 2 satisfies the condition.
Comparison will be performed for the length set by a SLEN command.
If a character literal is specified in operand 2, comparison will be performed for the entire length of the literal.

WS□□
- EQ ..... Operand 1 = Operand 2
- NE ..... Operand 1 ≠ Operand 2

[Example 1]

SLEN	3		Set the number of comparing characters to 3.
SCPY	1	'ABC'	Assign 'ABC' to column 1.
LET	1	2	Assign 2 to variable 1.
:			
SLCT			Execute multi-branching.
WSEQ	1	'XYZ'	(1) will be executed if columns 1 to 3 contain 'XYZ.' Since columns 1 to 3 contain 'ABC,' however, this command will not be executed.
:			
(1)			
:			
WSEQ	2	*1	(2) will be executed if the content of the number of characters specified by SLEN after column 2 is the same as the content of the column specified in variable 1.
:			
(2)			
:			
OTHE			This command will be executed if none of the conditions are satisfied. In this example, since (2) was executed, (3) will not be executed.
:			
(3)			
:			
EDSL			The processing will move here if any of the conditions were satisfied and the applicable command executed. In this example, (2) and (4) will be executed.
:			
(4)			
:			

* If multiple conditions are likely to be satisfied, remember that the first W□□□ will become valid and any subsequent commands will not be executed. Therefore, state from the command with the most difficult condition or highest priority.

- OTHE (Select other)

Extension condition (LD, A, O, AB, OB)	Input condition (I/O, flag)	Command, declaration			Output (Output, flag)
		Command, declaration	Operand 1	Operand 2	
Prohibited	Prohibited	OTHE	Prohibited	Prohibited	CP

[Function] This command is used between SLCT and EDSL commands to declare the command to be executed when none of the conditions are satisfied.

[Example 1] Refer to the sections on SLCT, WH□□ and WS□□.

- EDSL (End selected group)

Extension condition (LD, A, O, AB, OB)	Input condition (I/O, flag)	Command, declaration			Output (Output, flag)
		Command, declaration	Operand 1	Operand 2	
Prohibited	Prohibited	EDSL	Prohibited	Prohibited	CP

[Function] Declare the end of a SLCT command.

[Example 1] Refer to the sections on SLCT, WH□□ and WS□□.

1.16 System Information Acquisition

- AXST (Get axis status)

Extension condition (LD, A, O, AB, OB)	Input condition (I/O, flag)	Command, declaration			Output (Output, flag)
		Command, declaration	Operand 1	Operand 2	
Optional	Optional	AXST	Variable number	Axis number	CP

[Function] Store in the variable specified in operand 1 the status (axis error number) of the axis specified in operand 2.

(Note 1) If the obtained result is “0,” it means no axis error is present.
(Note 2) Since the error lists are written in hexadecimals, they must be converted to decimals.

[Example] AXST 1 2 Read the error number for axis 2 to variable 1.

If 3188 (decimal) is stored in variable 1 after the execution of this command:

3188 ÷ 16 = 199 ,,,4
199 ÷ 16 = 12 (= C) ,,,7

$3188 = 12\ (= C) \times 16^2 + 7 \times 16^2 + 4$
$= C74$ (HEX) (Hexadecimal number)

Therefore, an “Error No. C74, Actual-position soft limit over error” is present.

- PGST (Get program status)

Extension condition (LD, A, O, AB, OB)	Input condition (I/O, flag)	Command, declaration			Output (Output, flag)
		Command, declaration	Operand 1	Operand 2	
Optional	Optional	PGST	Variable number	Program number	CP

[Function] Store in the variable specified in operand 1 the status (program error number) of the program specified in operand 2.

(Note 1) If the obtained result is “0,” it means no program error is present.
(Note 2) Although the error lists are written in hexadecimals, the status to be stored (program error number) is a decimal. Therefore, the decimal program error numbers must be converted to hexadecimals.

[Example] PGST 1 2 Read the error number for program No. 2 to variable 1.

- SYST (Get system status)

Extension condition (LD, A, O, AB, OB)	Input condition (I/O, flag)	Command, declaration			Output (Output, flag)
		Command, declaration	Operand 1	Operand 2	
Optional	Optional	SYST	Variable number	Prohibited	CP

[Function] Store the system status (top-priority system error number) in the variable specified in operand 1.

(Note 1) If the obtained result is “0,” it means no system error is present.
(Note 2) Since the error lists are written in hexadecimals, they must be converted to decimals.
(Note 3) Relationship of error statuses

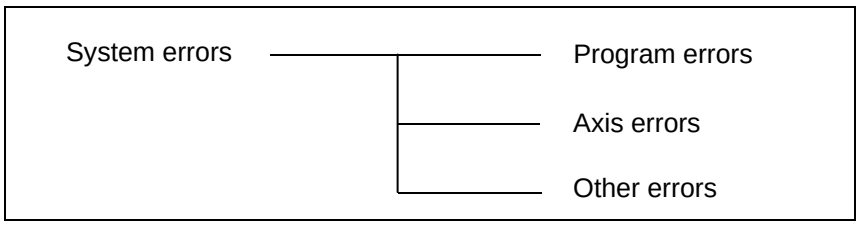

* An axis error that generates during operation with a program command will be registered both as a program error and an axis error.

[Example] SYST 1 Read the system error number to variable 1.

1.17 Zone

- WZNA (Wait for zone ON, with AND)

Extension condition (LD, A, O, AB, OB)	Input condition (I/O, flag)	Command, declaration			Output (Output, flag)
		Command, declaration	Operand 1	Operand 2	
Optional	Optional	WZNA	Zone number	Axis pattern	CP

[Function] Wait for the zone status of all axes (AND) specified by the axis pattern in operand 2 to become ON (inside zone) with respect to the zone specified in operand 1.

(Note 1) The zone status of axes not yet completing home return will remain OFF (outside zone).
(Note 2) A maximum of four areas can be set as zones for each axis ("Axis-specific parameter Nos. 86 to 97").
(Note 3) Zone output can be specified using "Axis-specific parameter Nos. 88, 91, 94 and 97" irrespective of this command.

[Example 1]

```
WZNA    1    11
```

If the parameters are set as follows, the program will wait until the zone status of axes 1 and 2 becomes ON (inside the shaded area shown in the diagram below).

[Example 2] The axis pattern can be specified indirectly using a variable.
When the command in [Example 1] is rephrased based on indirect specification using a variable:
11 (binary) → 3 (decimal)

```
LET     5    3      Assign 3 to variable 5.
WZNA    1    *5
```

	Axis 1	Axis 2
"Axis-specific parameter No. 86, Zone 1 max." (Value is set in units of 0.001 mm)	300000	200000
"Axis-specific parameter No. 87, Zone 1 min." (Value is set in units of 0.001 mm)	150000	100000

The program will proceed to the next step if both axes 1 and 2 are inside the shaded area.

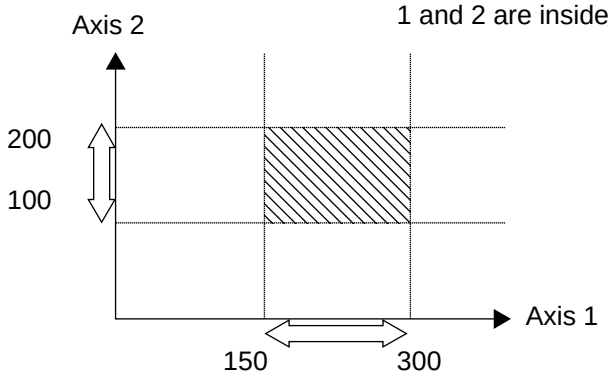

- WZNO (Wait for zone ON, with OR)

Extension condition (LD, A, O, AB, OB)	Input condition (I/O, flag)	Command, declaration			Output (Output, flag)
		Command, declaration	Operand 1	Operand 2	
Optional	Optional	WZNO	Zone number	Axis pattern	CP

[Function] Wait for the zone status of any of the axes (OR) specified by the axis pattern in operand 2 to become ON (inside zone) with respect to the zone specified in operand 1.

(Note 1) The zone status of axes not yet completing home return will remain OFF (outside zone).
(Note 2) A maximum of four areas can be set as zones for each axis (“Axis-specific parameter Nos. 86 to 97”).
(Note 3) Zone output can be specified using “Axis-specific parameter Nos. 88, 91, 94 and 97” irrespective of this command.

[Example 1]

```
WZNO    1       11
```

If the parameters are set as follows, the program will wait until the zone status of axes 1 or 2 becomes ON (inside the shaded area shown in the diagram below).

[Example 2] The axis pattern can be specified indirectly using a variable.
When the command in [Example 1] is rephrased based on indirect specification using a variable:
11 (binary) → 3 (decimal)

```
LET     5       3       Assign 3 to variable 5.
WZNO    1       *5
```

	Axis 1	Axis 2
“Axis-specific parameter No. 86, Zone 1 max.” (Value is set in units of 0.001 mm)	300000	200000
“Axis-specific parameter No. 87, Zone 1 min.” (Value is set in units of 0.001 mm)	150000	100000

The program will proceed to the next step if both axes 1 and 2 are inside the shaded area.

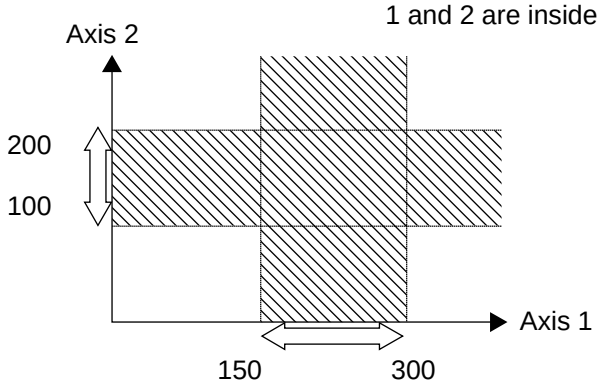

- WZFA (Wait for zone OFF, with AND)

Extension condition (LD, A, O, AB, OB)	Input condition (I/O, flag)	Command, declaration			Output (Output, flag)
		Command, declaration	Operand 1	Operand 2	
Optional	Optional	WZFA	Zone number	Axis pattern	CP

[Function] Wait for the zone status of all axes (AND) specified by the axis pattern in operand 2 to become OFF (outside zone) with respect to the zone specified in operand 1.

(Note 1) The zone status of axes not yet completing home return will remain OFF (outside zone).
(Note 2) A maximum of four areas can be set as zones for each axis (“Axis-specific parameter Nos. 86 to 97”).
(Note 3) Zone output can be specified using “Axis-specific parameter Nos. 88, 91, 94 and 97” irrespective of this command.

[Example]

```
WZFA    1    11
```

If the parameters are set as follows, the program will wait until the zone status of axes 1 and 2 becomes OFF (inside the shaded area shown in the diagram below)

[Example 2] The axis pattern can be specified indirectly using a variable.
When the command in [Example 1] is rephrased based on indirect specification using a variable:
11 (binary) → 3 (decimal)

```
LET     5    3      Assign 3 to variable 5.
WZFA    1    *5
```

	Axis 1	Axis 2
“Axis-specific parameter No. 86, Zone 1 max.” (Value is set in units of 0.001 mm)	300000	200000
“Axis-specific parameter No. 87, Zone 1 min.” (Value is set in units of 0.001 mm)	150000	100000

The program will proceed to the next step if both axes 1 and 2 are inside the shaded area.

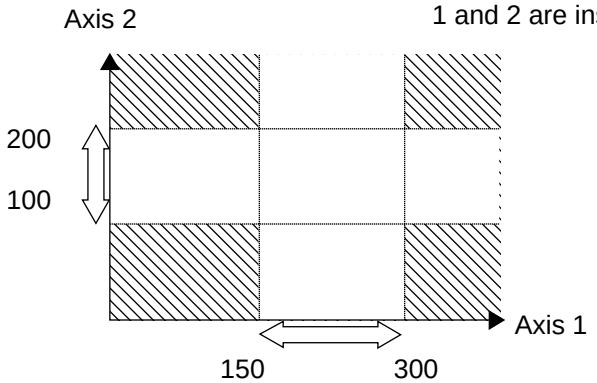

- WZFO (Wait for zone OFF, with OR)

Extension condition (LD, A, O, AB, OB)	Input condition (I/O, flag)	Command, declaration			Output (Output, flag)
		Command, declaration	Operand 1	Operand 2	
Optional	Optional	WZFO	Zone number	Axis pattern	CP

[Function] Wait for the zone status of any of the axes (OR) specified by the axis pattern in operand 2 to become OFF (outside zone) with respect to the zone specified in operand 1.

(Note 1) The zone status of axes not yet completing home return will remain OFF (outside zone).
(Note 2) A maximum of four areas can be set as zones for each axis (“Axis-specific parameter Nos. 86 to 97”).
(Note 3) Zone output can be specified using “Axis-specific parameter Nos. 88, 91, 94 and 97” irrespective of this command.

[Example 1]

```
WZFO    1       11
```

If the parameters are set as follows, the program will wait until the zone status of axes 1 or 2 becomes OFF (inside the shaded area shown in the diagram below).

[Example 2] The axis pattern can be specified indirectly using a variable.
When the command in [Example 1] is rephrased based on indirect specification using a variable:
11 (binary) → 3 (decimal)

```
LET     5       3       Assign 3 to variable 5.
WZFO    1       *5
```

	Axis 1	Axis 2
“Axis-specific parameter No. 86, Zone 1 max.” (Value is set in units of 0.001 mm)	300000	200000
“Axis-specific parameter No. 87, Zone 1 min.” (Value is set in units of 0.001 mm)	150000	100000

The program will proceed to the next step if both axes 1 and 2 are inside the shaded area.

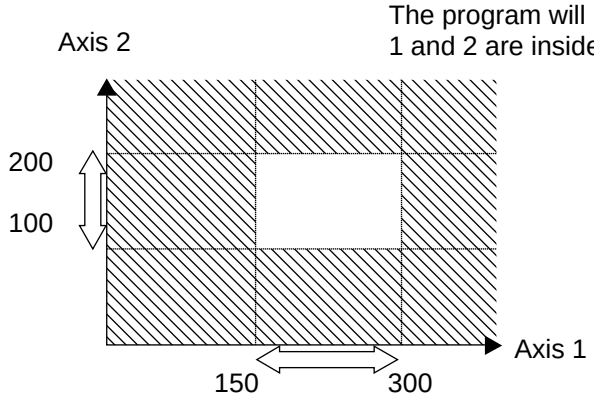

1.18 Communication

- OPEN (Open channel)

Extension condition (LD, A, O, AB, OB)	Input condition (I/O, flag)	Command, declaration			Output (Output, flag)
		Command, declaration	Operand 1	Operand 2	
Optional	Optional	OPEN	Channel number	Prohibited	CP

[Function] Open the channel specified in operand 1.
The specified channel will be enabled to send/receive hereafter.
Prior to executing this command, a SCHA command must be used to set an end character.

[Example]
```
SCHA    10
OPEN    1
```
Specify 10 (= LF) as the end character.
Open channel 1.

> Note: If “OPEN 0” is executed, the teaching connector (D-sub, 25-pin) will be disconnected. (This is because channel 0 is shared by the teaching pendant/PC software.)

- CLOS (Close channel)

Extension condition (LD, A, O, AB, OB)	Input condition (I/O, flag)	Command, declaration			Output (Output, flag)
		Command, declaration	Operand 1	Operand 2	
Optional	Optional	CLOS	Channel number	Prohibited	CP

[Function] Close the channel specified in operand 1.
The specified channel will be disabled to send/receive hereafter.

[Example]
```
CLOS    1
```
Close channel 1.

```
LET     1       2
CLOS    *1
```
Assign 2 to variable 1.
Close the content of variable 1 (channel 2).

- READ (Read)

Extension condition (LD, A, O, AB, OB)	Input condition (I/O, flag)	Command, declaration			Output (Output, flag)
		Command, declaration	Operand 1	Operand 2	
Optional	Optional	READ	Channel number	Column number	CC

[Function] Read a character string from the channel specified in operand 1 to the column specified in operand 2.
Read will end when the character specified by a SCHA command is received.
Either a local or global column may be specified.
Immediately after this command is executed, a return code will be stored in a local variable (factory setting: variable 99). Whether or not the command was executed successfully can be checked using this return code. If necessary, specify an appropriate processing to be performed when the command was terminated due to an error.
In main application version 0.41 or later, a dummy read (receive buffer cleared & receive disabled) can be performed if "0" is specified in operand 2 (the return code will indicate successful completion). The tool versions that support "0" input in operand 2 are listed below. If "0" cannot be input directly from the tool, it can be specified indirectly:

- PC software version 1.1.1.0 or later
- Teaching pendant application version 1.06 or later

[Example]

SCHA	10		Set LF (= 10) as the end character.
OPEN	1		Open channel 1.
READ	1	2	Read a character string from channel 1 to column 2 until LF is received.
TRAN	1	99	Assign a return code (variable 99) to variable 1.
CLOS	1		Close the channel.
SLCT			Branch to the processing corresponding to each return code. (Note) Using a GOTO command to branch out of the SLCT-EDSL syntax or to other branching processing within the syntax is prohibited.
WHEQ	1	0	If the content of variable 1 is "0" (successful completion), (1) will be performed. Accordingly, specify the processing to be performed upon successful completion in (1).
:			
(1)			
:			
WHEQ	1	1	If the content of variable 1 is "1" (timeout), (2) will be performed. Accordingly, specify an appropriate processing to be performed in (2), if necessary.
:			
(2)			
:			
WHEQ	1	2	If the content of variable 1 is "2" (timer cancelled), (3) will be performed. Accordingly, specify an appropriate processing to be performed in (3), if necessary.
:			
(3)			
:			
OTHE			If the content of variable 1 is other than "0," "1" or "2," (4) will be performed. Accordingly, specify an error handling in (4), if necessary.
:			
(4)			
:			
EDSL			The program moves here if any of the conditions was established and the corresponding command was executed.

(Note1) A READ command must be executed before the other side sends the end character.
(Note2) Channel Nos. 31 to 34 (available with the Ethernet option) cannot be specified for dummy read (operand 2: 0).

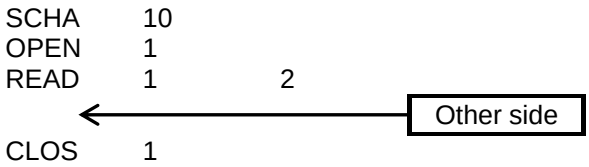

- Return code of the READ command
  The return code is stored in a local variable. The variable number can be set by “Other parameter No. 24.” The default variable number is 99.
  0: READ completed successfully (Receive complete)
  1: READ timeout (the timeout value is set by a TMRD command) (Continue to receive)
  2: READ timer cancelled (the wait status is cancelled by a TIMC command) (Continue to receive)
  3: READ SCIF overrun error (Receive disabled)
  4: READ SCIF receive error (framing error or parity error) (Receive disabled)
  5: READ factor error (program abort error) (Receive disabled)
  (Cannot be recognized by SEL commands)
  6: READ task ended (program end request, etc.) (Receive disabled)
  (Cannot be recognized by SEL commands)
  7: READ SCIF receive error due to other factor (Receive disabled)
  8: READ SIO overrun error (Receive disabled)
  9: READ SIO parity error (Receive disabled)
  10: READ SIO framing error (Receive disabled)
  11: READ SIO buffer overflow error (Receive disabled)
  12: READ SIO receive error due to other factor (Receive disabled)
  13 ~ 20: Used only in Ethernet (optional)
  21: READ SIO receive temporary queue overflow error (Receive disabled)
  22: READ SIO slave receive queue overflow error (Receive disabled)

- TMRW (Set READ/WRIT timeout value)

Extension condition (LD, A, O, AB, OB)	Input condition (I/O, flag)	Command, declaration			Output (Output, flag)
		Command, declaration	Operand 1	Operand 2	
Optional	Optional	TMRW	Read timer setting	(Write timer setting)	CP

[Function] Set the timeout setting to be applied to a READ command.
The timer setting specified in operand 1 will set the maximum time the program will wait for the character string read to end when a READ command is executed.
If the end character could not be read before the timer is up during the execution of the READ command, a timeout will occur and the program will move to the next step.
(Whether or not a timeout occurred can be checked using the return code to be stored in variable 99 (factory setting) immediately after a READ command is executed. If necessary, specify an appropriate processing to be performed when a timeout occurred.)
Setting the timer to “0” will allow the READ command to wait infinitely, without timeout, until the end character is read.
The timer setting is input in seconds (setting range: 0 to 99.00 seconds) including up to two decimal places.
Operand 1 can be specified indirectly using a variable.

(Note) TMRW is set to “0” in the default condition before TMRW setting is performed.

[Example]

```
SCHA    10              Set LF (=10) as the end character.
TMRW    30              Set the READ timeout value to 30 seconds.
OPEN    1               Open channel 1.
READ    1       2       Read the character string from channel 1 to
                        column 2 until LF is read.
TRAN    1       99      Assign the return code to variable 1.
CLOS    1               Close the channel.
```

Read completes successfully within 30 seconds → Variable No. 1 = 0
Timeout occurs → Variable No. 1 = 1

* The return code of READ command may not be limited to 0 or 1. The variable to store the return code can be set in “Other parameter No. 24.” Refer to the explanation of READ command for details.

The timer setting specified in operand 2 sets the timeout value to be applied when a WRIT command is executed (maximum time to wait for completion of send) (maximum time to wait for send based on flow control) (optional).
The WRIT timer setting is effective only for standard SIOs (channel 1 or 2 supporting flow control).
TMRD used in the X-SEL-J/K type controller is treated as TMRW in the X-SEL-P/Q type controller.
If a program file created for an X-SEL-J/K controller is transferred to an X-SEL-P/Q controller, the PC software will automatically convert “TMRD” to “TMRW” before the file is transferred.

- WRIT (Write)

Extension condition (LD, A, O, AB, OB)	Input condition (I/O, flag)	Command, declaration			Output (Output, flag)
		Command, declaration	Operand 1	Operand 2	
Optional	Optional	WRIT	Channel number	Column number	CC (Note 1)

[Function] Write the character string in the column specified in operand 2 to the channel specified in operand 1.
The operation will end when the character specified by a SCHA command is written.
Either a local or global column can be specified.

[Example]

SCHA	10		Set LF (= 10) as the end character.
OPEN	1		Open channel 1.
WRIT	1	2	Write the character string in column 2 to channel 1 until LF is written.
CLOS	1		Close the channel.

As long as a standard SIO port (channel 1 or 2) is open, a task other than the one that opened the port can be used to execute (send) a WRIT command. Accordingly, if a READ command is executed in a port-opening task and then a WRIT command is executed in other task, the response from the other side can be received without delay after the command is sent from the X-SEL.

(Note 1) CP for channels other than 1 and 2.

Return code of the WRIT command (channels 1 and 2 only)
The return code is stored in a local variable. The variable number can be set by “Other parameter No. 24.” The default variable number is 99.
0: WRIT completed successfully
1: WRIT timeout (the timeout value is set by a TMRW command)
2: WRIT timer cancelled (the wait status is cancelled by a TIMC command)
3 ~ 4: For future expansion
5: WRIT factor error (program abort error) (Cannot be recognized by SEL commands)
6: WRIT task ended (program end request, etc.) (Cannot be recognized by SEL commands)

- SCHA (Set end character)

Extension condition (LD, A, O, AB, OB)	Input condition (I/O, flag)	Command, declaration			Output (Output, flag)
		Command, declaration	Operand 1	Operand 2	
Optional	Optional	SCHA	Character code	Prohibited	CP

[Function] Set the end character to be used by a READ or WRIT command.
Any character from 0 to 255 (character code used in BASIC, etc.) can be specified.

[Example] Refer to the sections on READ and WRIT commands.

1.19 String Operation

- SCPY (Copy character string)

Extension condition (LD, A, O, AB, OB)	Input condition (I/O, flag)	Command, declaration			Output (Output, flag)
		Command, declaration	Operand 1	Operand 2	
Optional	Optional	SCPY	Column number	Column number, character literal	CC

[Function] Copy the character string in the column specified in operand 2 to the column specified in operand 1.
Copy will be performed for the length set by a SLEN command.
If a character literal is specified in operand 2, copy will be performed for the entire length of the literal.

[Example]

```
SCPY    1       'ABC'   Copy 'ABC' to column 1.

SLEN    10              Set the copying length to 10 bytes.
SCPY    100     200     Copy 10 bytes from column 200 to column 100.
```

- SCMP (Compare character strings)

Extension condition (LD, A, O, AB, OB)	Input condition (I/O, flag)	Command, declaration			Output (Output, flag)
		Command, declaration	Operand 1	Operand 2	
Optional	Optional	SCMP	Column number	Column number, character literal	EQ

[Function] Compare the column specified in operand 1 with the column specified in operand 2.
Comparison will be performed for the length set by a SLEN command.
If a character literal is specified in operand 2, comparison will be performed for the entire length of the literal.

[Example]

```
SCMP   1     'ABC'   600   Flag 600 will turn ON if columns 1 to 3 contain 'ABC.'

SLEN   5                   Set the comparing length to five bytes.
SCMP   10    30      999   Turn ON flag 999 if five bytes from columns 30 and 10
                           match.
```

- SGET (Get character)

Extension condition (LD, A, O, AB, OB)	Input condition (I/O, flag)	Command, declaration			Output (Output, flag)
		Command, declaration	Operand 1	Operand 2	
Optional	Optional	SGET	Variable number	Column number, character literal	CP

[Function] Assign one character from the column specified in operand 2 to the variable specified in operand 1.
If a character-string literal is specified in operand 2, the first character will be assigned.

[Example]

```
SGET    1       100
```
Assign one byte from column 100 to variable 1.

```
LET     1       3       Assign 3 to variable 1.
LET     2       1       Assign 1 to variable 2.
SCPY    1       'A'     Copy 'A' to column 1.
SGET    *1      *2      Assign 'A' from the content of variable 2 (column 1) to the
                        content of variable 1 (variable 3).
```

- SPUT (Set character)

Extension condition (LD, A, O, AB, OB)	Input condition (I/O, flag)	Command, declaration			Output (Output, flag)
		Command, declaration	Operand 1	Operand 2	
Optional	Optional	SPUT	Column number	Data	CP

[Function] Set the data specified in operand 2 in the column specified in operand 1.

[Example]

```
SPUT    5     10     Set 10 (LF) in column 5.

LET     1     100    Assign 100 to variable 1.
LET     2     50     Assign 50 to variable 2.
SPUT    *1    *2     Set the content of variable 2 (50 ('2')) in the content of
                     variable 1 (column 100).
```

- STR (Convert character string; decimal)

Extension condition (LD, A, O, AB, OB)	Input condition (I/O, flag)	Command, declaration			Output (Output, flag)
		Command, declaration	Operand 1	Operand 2	
Optional	Optional	STR	Column number	Data	CC

[Function] Copy to the column specified in operand 1 a decimal character string converted from the data specified in operand 2.
The data will be adjusted to the length set by a SLEN command.
If the data exceeds the specified length, it will be cut off at the length set by a SLEN command.
If the entire data has been converted within the length set by a SLEN command, the output will turn ON.

(Note) If the data specified in operand 2 is a 10-digit integer including eight or more valid digits, conversion of the values in the eighth and subsequent digits will not be guaranteed (the values through the seventh digits will be converted properly.)

[Example]

SLEN	5.3		Set a length consisting of five integer digits and three decimal digits.
STR	1	123	The following values will be set in columns 1 to 9:

1	2	3	4	5	6	7	8	9
		1	2	3	.	0	0	0

LET	1	10	Assign 10 to variable 1.
LET	102	987.6543	Assign 987.6543 to variable 102.
SLEN	2.3		Set a length consisting of two integer digits and three decimal digits.
STR	*1	*102	The following values will be set in columns 10 to 15:

10	11	12	13	14	15
8	7	.	6	5	4

Since the data exceeds the specified length, “9” in the 100’s place and “3” in the fourth decimal place will be cut off.

- STRH (Convert character string; hexadecimal)

Extension condition (LD, A, O, AB, OB)	Input condition (I/O, flag)	Command, declaration			Output (Output, flag)
		Command, declaration	Operand 1	Operand 2	
Optional	Optional	STRH	Column number	Data	CC

[Function] Copy to the column specified in operand 1 a hexadecimal character string converted from the data specified in operand 2.
Only the integer part will be adjusted to the length set by a SLEN command.
If the data exceeds the specified length, it will be cut off at the length set by a SLEN command.
If the entire data has been converted within the length set by a SLEN command, the output will turn ON.

(Note) If the data specified in operand 2 is a negative value, eight columns will be required to covert the entire data.

[Example]

```
SLEN    5
STRH    1       255
```

Set a format consisting of five integer digits.
The following values will be set in columns 1 to 5:

1	2	3	4	5
			F	F

```
LET     1       10
LET     102     987.6543
SLEN    2.3
STRH    *1      *102
```

Assign 10 to variable 1.
Assign 987.6543 to variable 102.
Set a length consisting of two integer digits and three decimal digits.
The following values will be set in columns 10 and 11:

10	11
D	B

".3" in the SLEN command and ".6543" in variable 102, which are the decimal part, will be ignored.
The integer part is expressed as '3DB' in hexadecimal. Since the length is two digits, however, "3" in the third digit will be cut off.

- VAL (Convert character string data; decimal)

Extension condition (LD, A, O, AB, OB)	Input condition (I/O, flag)	Command, declaration			Output (Output, flag)
		Command, declaration	Operand 1	Operand 2	
Optional	Optional	VAL	Variable number	Column number, character literal	CC

[Function] Convert the decimal data in the column specified in operand 2 to a binary and assign the result to the variable specified in operand 1.
Conversion will be performed for the length set by a SLEN command.
If a character-string literal is specified in operand 2, conversion will be performed for the entire length of the literal.

(Note) Keep the converting length to 18 characters or less.

[Example]

```
SCPY    10      '1234'      Set '1234' in column 10.
SLEN    4                   Set the converting length to four bytes.
VAL     1       10          Assign 1234, which is a binary converted from '1234' in
                            column 10, to variable 1.
```

```
LET     1       100         Assign 100 to variable 1.
LET     2       20          Assign 20 to variable 2.
SCPY    20      '1234'      Copy '1234' to column 20.
SCPY    24      '.567'      Copy '.567' to column 24.
SLEN    8                   Set the converting length to eight bytes.
VAL     *1      *2          Assign 1234.567, which is a binary converted from
                            '1234.567' in the content of variable 2 (column 20) to the
                            content of variable 1 (variable 100).
```

- VALH (Convert character string data; hexadecimal)

Extension condition (LD, A, O, AB, OB)	Input condition (I/O, flag)	Command, declaration			Output (Output, flag)
		Command, declaration	Operand 1	Operand 2	
Optional	Optional	VALH	Variable number	Column number, character literal	CC

[Function] Convert the hexadecimal data in the column specified in operand 2 to a binary and assign the result to the variable specified in operand 1.
Conversion will be performed for the length set by a SLEN command.
Only the integer part will be converted, with the decimal part being ignored.
If a character-string literal is specified in operand 2, conversion will be performed for the entire length of the literal.

(Note) Keep the converting length to 8 characters or less.

[Example]

```
SCPY    10      '1234'      Set '1234' in column 10.
SLEN    4                   Set the converting length to four bytes.
VALH    1       10          Assign 4660, which is a binary converted from hexadecimal
                            '1234' in column 10, to variable 1.


LET     1       100         Assign 100 to variable 1.
LET     2       20          Assign 20 to variable 2.
SCPY    20      'ABCD'      Copy 'ABCD' to column 20.
SLEN    4                   Set the converting length to four bytes.
VALH    *1      *2          Assign 43981, which is a binary converted from
                            hexadecimal 'ABCD' in the content of variable 2 (column
                            20) to the content of variable 1 (variable 100).
```

- SLEN (Set length)

Extension condition (LD, A, O, AB, OB)	Input condition (I/O, flag)	Command, declaration			Output (Output, flag)
		Command, declaration	Operand 1	Operand 2	
Optional	Optional	SLEN	Character string length	Prohibited	CP

[Function] Set the length to be processed by a string command.
This must always be set before using the following commands:

SCMP	.....	Decimal part is invalid.
SCPY	.....	Decimal part is invalid.
IS□□	.....	Decimal part is invalid.
WS□□	.....	Decimal part is invalid.
STRH	.....	Decimal part is invalid.
VAL, VALH	.....	Decimal part is invalid.
STR	.....	Decimal part is valid.

[Example] Refer to the examples of the above commands:

1.20 Palletizing-Related

- BGPA (Declare start of palletizing setting)

Extension condition (LD, A, O, AB, OB)	Input condition (I/O, flag)	Command, declaration			Output (Output, flag)
		Command, declaration	Operand 1	Operand 2	
Optional	Optional	BGPA	Palletizing number	Prohibited	CP

Declare the start of a palletizing setting.
Once this command is executed, palletizing setting for the palletizing number specified in operand 1 will be enabled.
(In the case of an ACHZ, AEXT, OFAZ or ATRG command, setting is enabled without declaring BGPA.)
The input range of palletizing number is from 1 to 10.
When the palletizing setting is complete, execute EDPA.
Nested BGPAs are not supported. To declare start of another palletizing setting, execute an EDPA command and then execute a BGPA command again.
If the output field is specified, the output will turn ON after this command is executed.
Palletizing numbers are in the local range. Therefore, a given palletizing setting is valid only within the program in which it is set.

(Note) Using a GOTO command to branch out of or into a BGPA-EDPA syntax is prohibited.

- EDPA (Declare end of palletizing setting)

Extension condition (LD, A, O, AB, OB)	Input condition (I/O, flag)	Command, declaration			Output (Output, flag)
		Command, declaration	Operand 1	Operand 2	
Prohibited	Prohibited	EDPA	Prohibited	Prohibited	CP

Declare the end of a palletizing setting.
If a palletizing-setting command (excluding BGPA, ACHZ, ATRG, AEXT and OFAZ) is executed before another BGPA is declared following an execution of this command (= while palletizing setting is not enabled), an error will generate.
If the output field is specified, the output will turn ON after this command is executed.

- PAPI (Set palletizing counts)

Extension condition (LD, A, O, AB, OB)	Input condition (I/O, flag)	Command, declaration			Output (Output, flag)
		Command, declaration	Operand 1	Operand 2	
Optional	Optional	PAPI	Count	Count	CP

Set counts in the palletizing-axis directions.
The count specified in operand 1 will apply to the preferential-axis (PX-axis) direction, while the count specified in operand 2 will apply to the PY-axis direction.
If this command is executed before BGPA is declared (= while palletizing setting is not enabled), an error will generate.
If the output field is specified, the output will turn ON after this command is executed.

- PAPN (Set palletizing pattern)

Extension condition (LD, A, O, AB, OB)	Input condition (I/O, flag)	Command, declaration			Output (Output, flag)
		Command, declaration	Operand 1	Operand 2	
Optional	Optional	PAPN	Pattern number	Prohibited	CP

Set a palletizing pattern.
The palletizing pattern specified in operand 1 will be set (1 = Pattern 1, 2 = Pattern 2).
If this command is not declared, pattern 1 will be used.
If this command is executed before BGPA is declared (= while palletizing setting is not enabled), an error will generate.
If the output field is specified, the output will turn ON after this command is executed.

- PASE (Declare palletizing axes)

Extension condition (LD, A, O, AB, OB)	Input condition (I/O, flag)	Command, declaration			Output (Output, flag)
		Command, declaration	Operand 1	Operand 2	
Optional	Optional	PASE	Axis number	Axis number	CP

Set the two axes to be used in palletizing (PX and PY-axes).
The axis specified in operand 1 will be set as the preferential axis (PX-axis).
The axis specified in operand 2 will be set as the PY-axis.
This command is used in conjunction with PAPT and PAST.
It cannot be used together with a 3-point teaching (PAPS) command. Whichever is set later will be given priority.

It is recommended to use a 3-point teaching (PAPS) command if the palletizing requires high accuracy.

If this command is executed before BGPA is declared (= while palletizing setting is not enabled), an error will generate.
If the output field is specified, the output will turn ON after this command is executed.

- PAPT (Set palletizing pitches)

Extension condition (LD, A, O, AB, OB)	Input condition (I/O, flag)	Command, declaration			Output (Output, flag)
		Command, declaration	Operand 1	Operand 2	
Optional	Optional	PAPT	Pitch	Pitch	CP

Set palletizing pitches.
The value specified in operand 1 will be set as the pitch for the preferential axis (PX-axis), while the value specified in operand 2 will be set as the pitch for the PY-axis.
This command is used in conjunction with PASE and PAST.
If this command is executed before BGPA is declared (= while palletizing setting is not enabled), an error will generate.
If the output field is specified, the output will turn ON after this command is executed.

- PAST (Set palletizing reference point)

Extension condition (LD, A, O, AB, OB)	Input condition (I/O, flag)	Command, declaration			Output (Output, flag)
		Command, declaration	Operand 1	Operand 2	
Optional	Optional	PAST	(Position number)	Prohibited	CP

Set the reference point used in palletizing.
If a value is set in operand 1, that position number specified in operand 1 will be used to store the reference point data.
If no value is set in operand 1, the position-number setting for storing reference point data will become invalid.
This command is used in conjunction with PASE and PAPT.
If this command is not set, coordinates (0, 0) are used as the reference point. If this command is set, the set coordinates are used as the reference point in calculating the position coordinates of palletizing points.
Coordinates in both the PX and PY-axis directions must always be set as the reference-point coordinates. If a palletizing movement command such as PMVP or PMVL is executed, however, specification of palletizing Z-axis (PZ-axis) coordinate is optional. If a Z-axis coordinate is specified, movement in the PZ-axis direction will become enabled. Even if PZ-axis coordinate is not specified, operation will still be performed—just that the position will not move in the PZ-axis direction. Note, however, that an error will generate in the following cases:
If this command and PZ-axis are set but the PX, PY and PZ-axes are not set as valid axes in the reference point data, an error will generate when position coordinates are calculated. If the palletizing Z-axis is not set and the PX and PY-axes are not set as valid axes in the reference point data, an error will also generate when position coordinates are calculated. “When position coordinates are calculated” means when PAPG (get palletizing calculation data) or any palletizing movement command such as PMVP, PMVL or PACH is executed.
If this command is executed before BGPA is declared (= while palletizing setting is not enabled), an error will generate.
If the output field is specified, the output will turn ON after this command is executed.

- PAPS (Set palletizing points) for 3-point & 4-point teaching

Extension condition (LD, A, O, AB, OB)	Input condition (I/O, flag)	Command, declaration			Output (Output, flag)
		Command, declaration	Operand 1	Operand 2	
Optional	Optional	PAPS	Position number	(Palletizing position setting type)	CP

Set palletizing positions by means of 3-point teaching.

Palletizing positions can also be set by means of 4-point teaching. In 4-point teaching, the pallet surface can be defined as any quadrangle other than a square, rectangle or parallelogram.

In operand 1, specify the position number to be used as the start point required in the setting of palletizing positions by 3-point teaching. If “n” is set as the position number corresponding to the start point, store position data corresponding to the end point in PX-axis direction in position No. n+1, and store position data corresponding to the end point in PY-axis direction in position No. n+2.
In the case of 4-point teaching, position data corresponding to the end point must also be stored in position No. n+3.

In operand 2, specify the palletizing position setting type.

[Palletizing position setting type]

If “0” is set or nothing is specified in operand 2, palletizing positions will be set by 3-point teaching.
As shown in Fig. 1 (a), palletizing positions will be placed on the quadrangular pallet surface determined by the three points including the start point, end point in PX-axis direction, and end point in PY-axis direction.

If “2” is specified in operand 2, palletizing positions will be set by 4-point teaching (non-planar type).
As shown in Fig. 1 (b), palletizing positions will be placed on the quadrangular pallet surface determined by the four points including the start point, end point in PX-axis direction, end point in PY-axis direction, and end point. Take note that whether the shape becomes planar or not depends on the point data of the end point.

Fig. 1 shows how palletizing positions are placed.

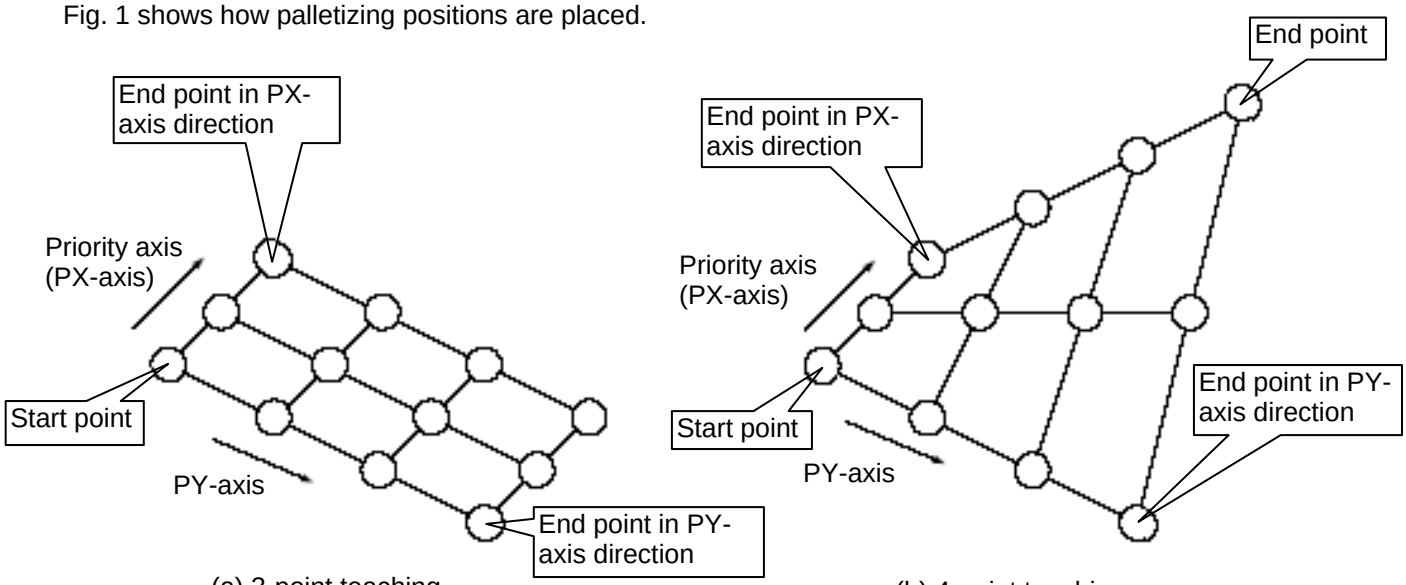

Fig. 1 Placement of Palletizing Positions

- If palletizing positions are set by means of 4-point teaching and a certain level of palletizing accuracy is required in a condition where all four points used in the setting of palletizing positions are known to be on a plane, it is recommended that palletizing positions be set in a non-planar manner.

  If “1” is specified in operand 2, palletizing positions will be set by 4-point teaching (planar type).
  Fig. 2 (a)
  The plane is determined by the three points including the start point, end point in PX-axis direction, and end point in PY-axis direction. Shift the end point in parallel in PZ direction (vertical direction) and define a new end point as a point of intersection of the lines extending from the original end point and other end points on the original plane.
  Palletizing positions will be placed on the quadrangular pallet surface determined by the four points, including the new end point.

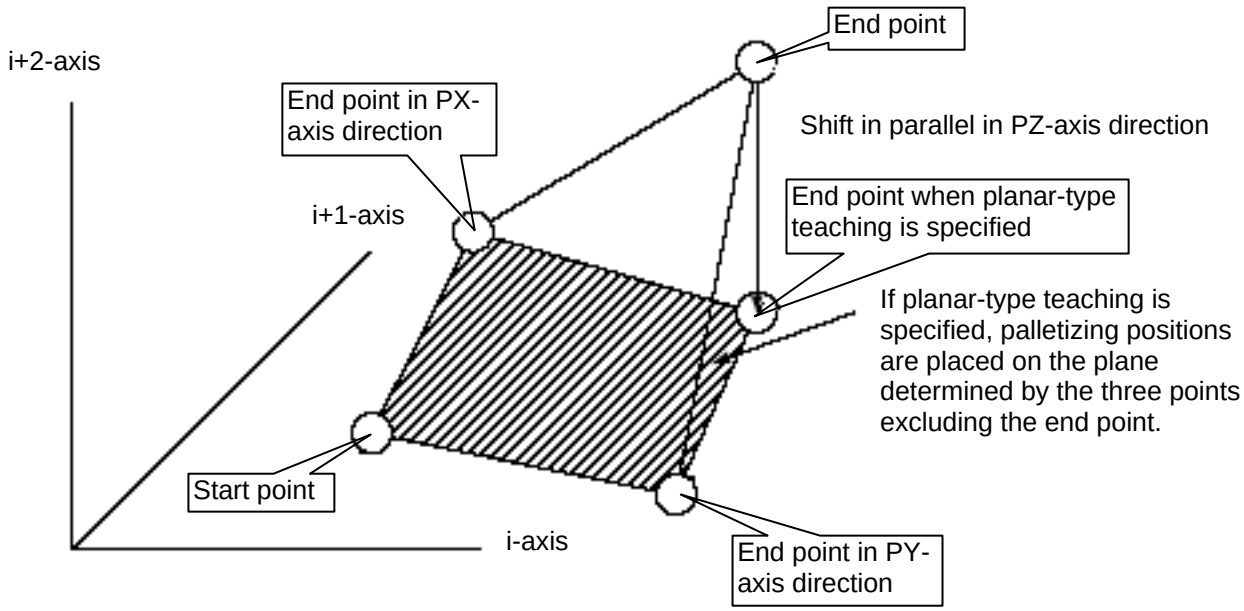

Figure.2-(a)

Take note that if any of the conditions shown in Table 1 is satisfied by any two or all of the remaining three points as applicable, other than the end point, then the end point will shift in a different direction. These conditions apply to situations where the plane determined by the three points excluding the end point is lying vertically to the ground. The shifting direction of the end point must be changed in these cases, because shifting the end point in parallel in PZ direction (vertical direction) will not provide a new end point intersecting with the original plane.

Table 1 Shifting Direction of End Point When Planar-type Teaching Is Specified

Condition	Shifting direction of end point
The point data of the i-axis component is the same among all three points other than the end point. (Refer to Fig. 2 (b).)	Shift the end point in parallel in i-axis direction.
The point data of any component other than the PZ-axis component is the same between the start point and the end point in PX-axis direction. (Refer to Fig. 2 (c).)	Shift the end point in parallel in the direction of either of the two axes other than the PZ-axis, whichever has the younger axis number.
The point data of any component other than the PZ-axis component is the same between the start point and the end point in PY-axis direction. (Refer to Fig. 2 (c).)	
The point data of any component other than the PZ-axis component is the same between the end point in PX-axis direction and the end point in PY-axis direction. (Refer to Fig. 2 (c).)	

* i indicates the axis number of either of the two axes other than the PZ-axis.

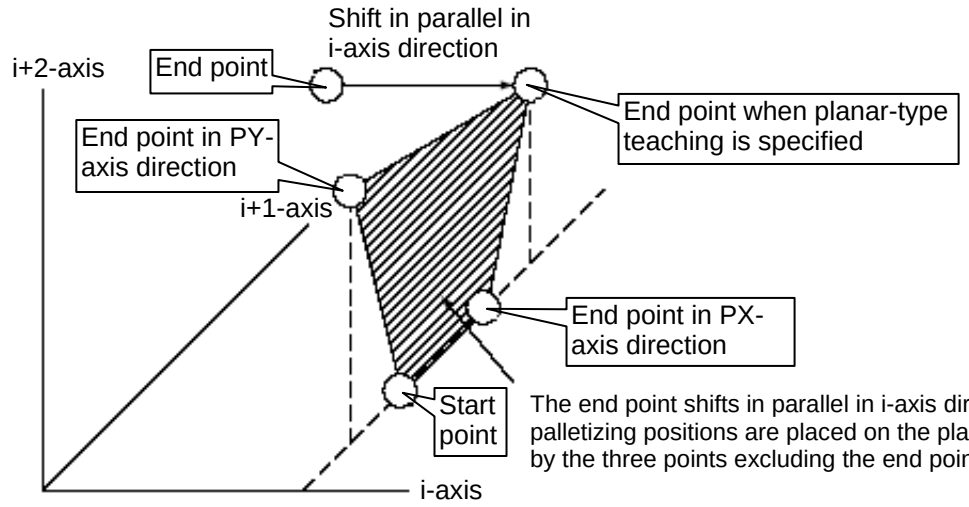

The end point shifts in parallel in i-axis direction and palletizing positions are placed on the plane determined by the three points excluding the end point.

Figure.2-(b)

When the point data of the i-axis component is the same among all three points other than the end point

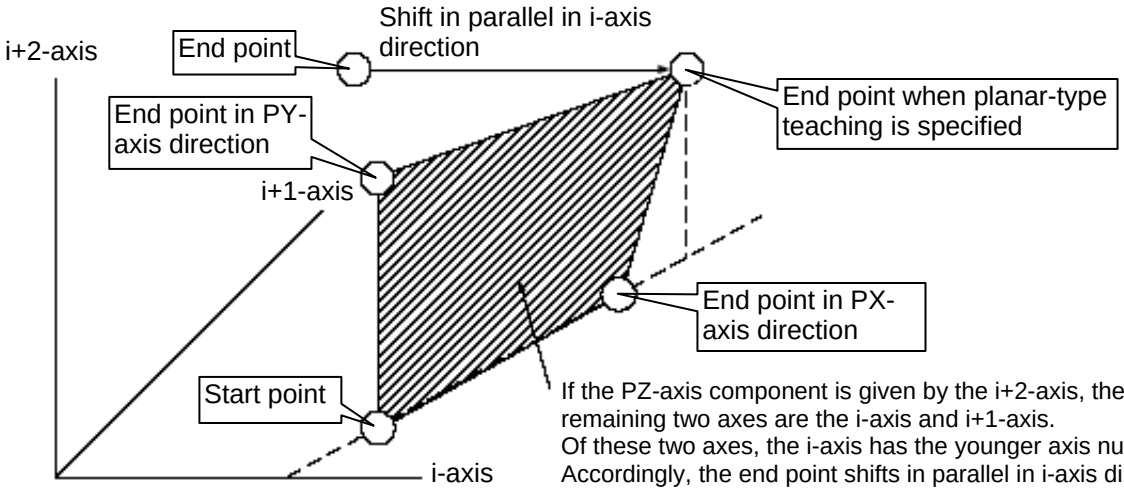

If the PZ-axis component is given by the i+2-axis, the remaining two axes are the i-axis and i+1-axis.
Of these two axes, the i-axis has the younger axis number.
Accordingly, the end point shifts in parallel in i-axis direction and palletizing positions are placed on the plane determined by the three points excluding the end point.

Figure.2-(c)

When the point data of any component other than the PZ-axis component is the same between any two points among the three points other than the end point
(In the above figure, the point data of a component other than the PZ-axis component is the same between the start point and the end point in PY-axis direction.)

- If the valid axis pattern of the point data used for 3-point or 4-point teaching does not match, an error “CB0, Mismatched valid axes and palletizing 3-point teaching data” will generate. Take note, however, that if this command is executed after specifying an axis used in a GRP command, only the specified axis among the valid point-data axes will be used as the source of palletizing point data. Executing the GRP command thereafter under a different setting will not have any negative effect.
- If a PZ-axis is already declared, there must be two valid axes excluding the PZ-axis. If a PZ-axis is not declared yet, there must be two or three valid axes. If there are not enough valid axes, an error “CAE: Insufficient valid axes for palletizing 3-point teaching data” will generate. If there are too many valid axes, on the other hand, an error “CAF: Excessive valid axes for palletizing 3-point teaching data” will generate. If planar-type teaching is specified and a PZ-axis is not declared yet, specify two valid axes. If there are fewer or more than two valid axes, a “CB4: Arch-motion Z-axis non-declaration error” will generate.

- PSLI (Set zigzag)

Extension condition (LD, A, O, AB, OB)	Input condition (I/O, flag)	Command, declaration			Output (Output, flag)
		Command, declaration	Operand 1	Operand 2	
Optional	Optional	PSLI	Offset amount	(Count)	CP

Set a zigzag palletizing.
The value specified in operand 1 will be set as the offset amount for even-numbered rows.
The count specified in operand 2 will be set as the count for even-numbered rows.
(Refer to “Palletizing Setting” – “Zigzag setting” under "How to Use.")
If operand 2 is not specified, the count for even-numbered rows will become the same as the count for odd-numbered rows.
If a setting is performed by 3-point teaching with PAPS (set palletizing points), the PX and PY-axes need not be parallel with the physical axes. In this case, the offset will apply in parallel with the PX-axis. If the offset is a positive value, the absolute value of offset will be applied toward the end-point direction of the PX-axis. If the offset is a negative value, the absolute value will be applied toward the start-point direction.
If this command is executed before a BGPA is declared (= while palletizing setting is not enabled), an error will generate.
If the output field is specified, the output will turn ON after this command is executed.

- PCHZ (Declare palletizing Z-axis) Only when there are at least three axes.

Extension condition (LD, A, O, AB, OB)	Input condition (I/O, flag)	Command, declaration			Output (Output, flag)
		Command, declaration	Operand 1	Operand 2	
Optional	Optional	PCHZ	(Axis number)	Prohibited	CP

Specify the axis number representing the palletizing Z direction.
The axis number specified in operand 1 will be set as the axis number representing the palletizing Z direction.
If operand 1 is not specified, the specification of palletizing Z-axis that was already declared will become invalid.
If this command is executed before a BGPA is declared (= while palletizing setting is not enabled), an error will generate.
If the output field is specified, the output will turn ON after this command is executed.

● PTRG (Set palletizing arch triggers)

Extension condition (LD, A, O, AB, OB)	Input condition (I/O, flag)	Command, declaration			Output (Output, flag)
		Command, declaration	Operand 1	Operand 2	
Optional	Optional	PTRG	Position number	Position number	CP

Set the arch triggers to be used for arch motion along the palletizing points.
(This setting becomes valid when a PACH command is executed.)
Set the palletizing Z-axis (PZ-axis) position data in the point data specified in operand 1 as the palletizing start-point arch trigger, and set the PZ-axis position data in the point data specified in operand 2 as the palletizing end-point arch trigger.

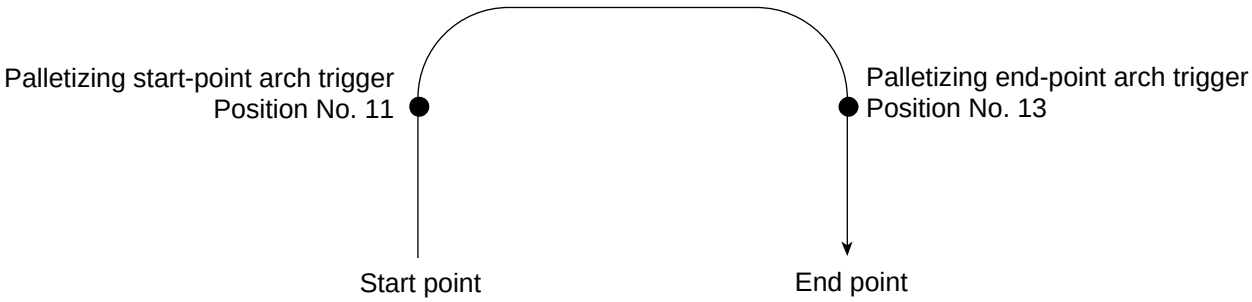

PTRG 11 13

(Refer to “Palletizing Setting” – “Palletizing arch triggers” under "How to Use.")
As for the point data, the PZ-axis data specified by a PCHZ command must be valid.
For an arch-motion operation along the palletizing points, set it so that a horizontal movement will begin when the start-point arch trigger is reached during ascent from the start point, and that the end-point arch trigger will be reached after a horizontal movement is completed during descent.
If this command is executed before a BGPA is declared (= while palletizing setting is not enabled), an error will generate.
If the output field is specified, the output will turn ON after this command is executed.

- PEXT (Set palletizing composition)

Extension condition (LD, A, O, AB, OB)	Input condition (I/O, flag)	Command, declaration			Output (Output, flag)
		Command, declaration	Operand 1	Operand 2	
Optional	Optional	PEXT	(Position number)	Prohibited	CP

Set palletizing composition.
The position number specified in operand 1 will be set for use in composition.
When a palletizing movement command is executed, the data of any valid axes other than the PX, PY (and PZ)-axes in the specified point data will comprise the end-point coordinates of the composite axis.
If operand 1 is not specified, the position number for composition setting that was already declared will become invalid.
If this command is executed before a BGPA is declared (= while palletizing setting is not enabled), an error will generate.
If the output field is specified, the output will turn ON after this command is executed.

- OFPZ (Set palletizing Z-axis offset)

Extension condition (LD, A, O, AB, OB)	Input condition (I/O, flag)	Command, declaration			Output (Output, flag)
		Command, declaration	Operand 1	Operand 2	
Optional	Optional	OFPZ	Offset value	Prohibited	CP

Set the offset in the palletizing Z-axis direction.
The value specified in operand 1 will be set as the offset in the palletizing Z-axis direction.
The offset amount is set in mm and the effective resolution is 0.001 mm.
A negative value can also be specified as the offset, as long as the operation range will not be exceeded.
This offset is valid only at the end point of PACH (palletizing-point arch motion) operation.
If this command is executed before a BGPA is declared (= while palletizing setting is not enabled), an error will generate.
If the output field is specified, the output will turn ON after this command is executed.

- ACHZ (Declare arch-motion Z-axis)

Extension condition (LD, A, O, AB, OB)	Input condition (I/O, flag)	Command, declaration			Output (Output, flag)
		Command, declaration	Operand 1	Operand 2	
Optional	Optional	ACHZ	Axis number	Prohibited	CP

Specify the axis number representing the arch-motion Z direction.
The axis number specified in operand 1 will be set as the axis number representing the arch-motion Z direction.
If the output field is specified, the output will turn ON after this command is executed.

- ATRG (Set arch triggers)

Extension condition (LD, A, O, AB, OB)	Input condition (I/O, flag)	Command, declaration			Output (Output, flag)
		Command, declaration	Operand 1	Operand 2	
Optional	Optional	ATRG	Position number	Position number	CP

Set the arch triggers used for arch motion.
(This setting becomes valid when an ARCH command is executed.)
Set the arch-motion Z-axis position data in the point data specified in operand 1 as the start-point arch trigger, and set the arch-motion Z-axis position data in the point data specified in operand 2 as the end-point arch trigger.

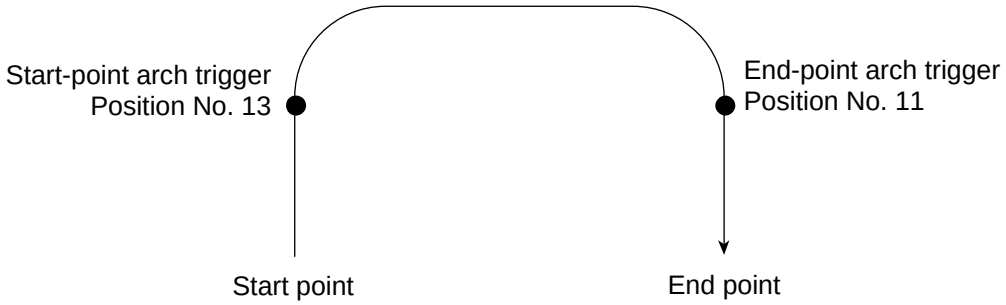

ATRG 13 11

(Refer to “Palletizing Setting” – “Arch triggers” under “How to Use.”)
For an arch-motion operation, set it so that a horizontal movement will begin when the start-point arch trigger is reached during ascent from the start point, and that the end-point arch trigger will be reached after a horizontal movement is completed during descent.
If the output field is specified, the output will turn ON after this command is executed.

- AEXT (Set arch-motion composition)

Extension condition (LD, A, O, AB, OB)	Input condition (I/O, flag)	Command, declaration			Output (Output, flag)
		Command, declaration	Operand 1	Operand 2	
Optional	Optional	AEXT	(Position number)	Prohibited	CP

Set arch-motion composition.
The position number specified in operand 1 will be set for use in composition.
When an arch motion is executed, the data of valid axes in the point data specified in this command, except for the data of valid axes in the arch-motion end-point data as well as the arch-motion Z-axis data, will comprise the end-point coordinates of the composite axis.
If operand 1 is not specified, the position number for composition setting that was already declared will become invalid.
If the output field is specified, the output will turn ON after this command is executed.

- OFAZ (Set arch-motion Z-axis offset)

Extension condition (LD, A, O, AB, OB)	Input condition (I/O, flag)	Command, declaration			Output (Output, flag)
		Command, declaration	Operand 1	Operand 2	
Optional	Optional	OFAZ	Offset value	Prohibited	CP

Set the offset in the arch-motion Z-axis direction.
The value specified in operand 1 will be set as the offset in the arch-motion Z-axis direction.
The offset amount is set in mm and the effective resolution is 0.001 mm.
A negative value can also be specified as the offset, as long as the operation range will not be exceeded.
This offset is valid only at the end point of ARCH (arch motion) operation.
If the output field is specified, the output will turn ON after this command is executed.

1.21 Palletizing Calculation Command

- PTNG (Get palletizing position number)

Extension condition (LD, A, O, AB, OB)	Input condition (I/O, flag)	Command, declaration			Output (Output, flag)
		Command, declaration	Operand 1	Operand 2	
Optional	Optional	PTNG	Palletizing number	Variable number	CP

Assign the palletizing position number for the palletizing number specified in operand 1 to the variable specified in operand 2.
If the output field is specified, the output will turn ON after this command is executed.

- PINC (Increment palletizing position number by 1)

Extension condition (LD, A, O, AB, OB)	Input condition (I/O, flag)	Command, declaration			Output (Output, flag)
		Command, declaration	Operand 1	Operand 2	
Optional	Optional	PINC	Palletizing number	Prohibited	CC

Increment by 1 the palletizing position number for the palletizing number specified in operand 1.
If the incremented value is considered normal as a palletizing position number calculated under the current palletizing setting, the value will be updated. If not, the value will not be updated.
If the output field is specified, the output will turn ON when the value was successfully incremented, and turn OFF if the increment failed.

- PDEC (Decrement palletizing position number by 1)

Extension condition (LD, A, O, AB, OB)	Input condition (I/O, flag)	Command, declaration			Output (Output, flag)
		Command, declaration	Operand 1	Operand 2	
Optional	Optional	PDEC	Palletizing number	Prohibited	CC

Decrement by 1 the palletizing position number for the palletizing number specified in operand 1.
If the decremented value is considered normal as a palletizing position calculated under the current palletizing setting, the value will be updated. If not, the value will not be updated.
If the output field is specified, the output will turn ON when the value was successfully decremented, and turn OFF if the decrement failed.

- PSET (Set palletizing position number directly)

Extension condition (LD, A, O, AB, OB)	Input condition (I/O, flag)	Command, declaration			Output (Output, flag)
		Command, declaration	Operand 1	Operand 2	
Optional	Optional	PSET	Palletizing number	Data	CC

Set the value specified in operand 2 as the palletizing position number for the palletizing number specified in operand 1.
If the specified value is considered normal as a palletizing position calculated under the current palletizing setting, the value will be set. If not, the value will not be set.
If the output field is specified, the output will turn ON when the palletizing position number was successfully updated, and turn OFF if the update failed.

- PARG (Get palletizing angle)

Extension condition (LD, A, O, AB, OB)	Input condition (I/O, flag)	Command, declaration			Output (Output, flag)
		Command, declaration	Operand 1	Operand 2	
Optional	Optional	PARG	Palletizing number	Axis number	CP

Obtain the palletizing angle.
Calculate the palletizing angle (degrees) from the physical axis specified in operand 2 for the palletizing number specified in operand 1, and store the result in variable 199.

This command need not be executed, if not necessary.
If this command is executed after PAPS (set 3 palletizing points for teaching) is executed, the angle formed by the preferential axis and the specified physical axis will be calculated automatically. If this command is executed before PAPS is executed, or after both PAPS and PASE are executed in this order, an error will generate.
The axes to be used can be specified with a GRP command before PAPS is executed (refer to the detailed explanation of PAPS). If the valid axis pattern of the 3-point teaching data does not match, an error “CB0, Mismatched valid axes and palletizing 3-point teaching data” will generate.
If the number of valid point-data axes (the number of valid axes excluding the PZ-axis, if a palletizing Z-axis (PZ-axis) has already been declared) is less than two, an error “CAE, Insufficient valid axes for palletizing 3-point teaching data” will generate. If the number of valid point-data axes is more than two, an error “CB9, PX/PY-axes indeterminable when obtaining palletizing angle” will generate.
If the axis number specified in operand 2 is neither of the two valid axes in the point data excluding the PZ-axis, an error “CBA, Reference axis and PX/PY-axes mismatch when obtaining palletizing angle” will generate.
If the reference point among the three teaching points is the same as the point data at the PX-axis end point other than the PZ-axis component, an error “Reference point and PX-axis end point identical when obtaining palletizing angle” will generate, and angle calculation will be disabled.
The actual operating direction may have been reversed depending on the mechanism of the rotating axis and the setting of axis-specific parameter No. 6, “Operating-direction reversing selection.” To use the value obtained by this command, be sure to confirm the actual operating direction.
If the output field is specified, the output will turn ON after this command is executed.

- PAPG (Get palletizing calculation data)

Extension condition (LD, A, O, AB, OB)	Input condition (I/O, flag)	Command, declaration			Output (Output, flag)
		Command, declaration	Operand 1	Operand 2	
Optional	Optional	PAPG	Palletizing number	Position number	CP

Store the position coordinate data of the palletizing points for the palletizing number specified in operand 1, in the position number specified in operand 2.
If the output field is specified, the output will turn ON after this command is executed.

1.22 Palletizing Movement Command

- PMVP (Move to palletizing points via PTP)

Extension condition (LD, A, O, AB, OB)	Input condition (I/O, flag)	Command, declaration			Output (Output, flag)
		Command, declaration	Operand 1	Operand 2	
Optional	Optional	PMVP	Palletizing number	(Position number)	PE

Move to the calculated palletizing points via PTP.
The axes will move to the palletizing points specified in operand 1, via PTP.
If the palletizing points are valid only for the PX/PY-axes (when palletizing Z-axis (PZ-axis) is not specified, etc.), movement in directions other than the PX/PY-axis directions will not be performed. If the PZ-axis coordinates of the palletizing points are also valid, movement in the PZ-axis direction will also be performed.
However, if a position number is specified in operand 2, the PZ-direction position will move to the height of the specified position number by ignoring the palletizing calculation (only when three or more axes are available).
Any data other than PZ-axis data contained in the position number specified in operand 2 will be ignored. Absence of Z-axis data will be handled as an error.
If palletizing composition is set, any axes other than the PX, PY (and PZ)-axes will also be operated if data is available for such axes.
Executing this command will not increment the palletizing position number by 1.
Before specifying operand 2, a palletizing Z-axis must have been declared (PCHZ) in the palletizing setting.
If palletizing Z-axis has not been declared, an error will generate.

- PMVL (Move to palletizing points via interpolation)

Extension condition (LD, A, O, AB, OB)	Input condition (I/O, flag)	Command, declaration			Output (Output, flag)
		Command, declaration	Operand 1	Operand 2	
Optional	Optional	PMVL	Palletizing number	(Position number)	PE

Move to the calculated palletizing points via interpolation.
The axes will move to the palletizing points specified in operand 1, via interpolation.
If the palletizing points are valid only for the PX/PY-axes (when palletizing Z-axis (PZ-axis) is not specified, etc.), movement in directions other than the PX/PY-axis directions will not be performed. If the PZ-axis coordinates of the palletizing points are also valid, movement in the PZ-axis direction will also be performed.
However, if a position number is specified in operand 2, the PZ-direction position will move to the height of the specified position number by ignoring the palletizing calculation (only when three or more axes are available).
Any data other than PZ-axis data contained in the position number specified in operand 2 will be ignored. Absence of Z-axis data will be handled as an error.
If palletizing composition is set, any axes other than the PX, PY (and PZ)-axes will also be operated if data is available for such axes.
Executing this command will not increment the palletizing position number by 1.
Before specifying operand 2, a palletizing Z-axis must have been declared (PCHZ) in the palletizing setting.
If palletizing Z-axis has not been declared, an error will generate.

- PACH (Palletizing-point arch motion)

Extension condition (LD, A, O, AB, OB)	Input condition (I/O, flag)	Command, declaration			Output (Output, flag)
		Command, declaration	Operand 1	Operand 2	
Optional	Optional	PACH	Palletizing number	Position number	PE

Perform arch motion from the current point and move to the palletizing points.

- Move to the palletizing points specified in operand 1, via arch motion.
- Movements in the PX/PY-axis directions will begin after rising from the current point to the palletizing start-point arch trigger. After the Z point specified in operand 2 (as the highest point) is passed and movements in the PX/PY-axis directions are complete, the axes will pass near the palletizing end-point arch trigger and reach the calculated palletizing point.
- Palletizing arch triggers must have been set using a PTRG command.

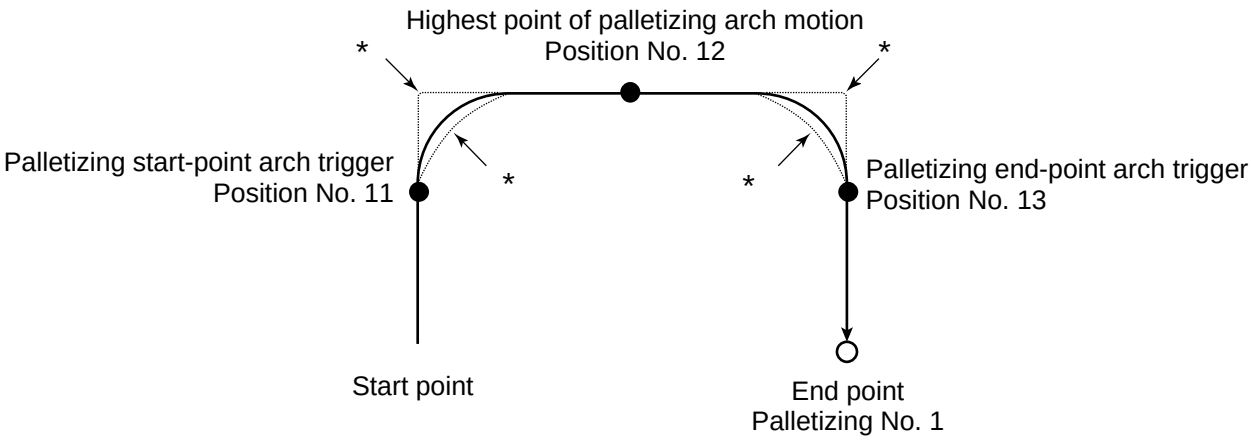


```
PCHZ    3
PTRG    11      13
  |
  |
  |
PACH    1       12
```

* When the operation is resumed after a pause, depending on the position where the operation is resumed the locus may follow the lines (dotted lines) indicated by asterisks in the diagram for the composite section from ascent to horizontal movement or from horizontal movement to descent. Be careful not to cause interference.

- The PZ-axis coordinate of the end point will become the PZ-axis component of the position coordinates of the palletizing point, if any, plus the palletizing Z-axis offset. If there is no PZ component, the PZ-axis coordinate of the end point will become the PZ-axis coordinate of the start point plus the palletizing Z-axis offset. (Normally the offset is added to all palletizing positions, such as the arch triggers and Z point.)
- An error will generate if the palletizing start-point arch trigger is set below the start point or the palletizing end-point arch trigger is set below the end point. (Note: Up/down has nothing to do with +/– on the coordinate system.)
- The PZ-axis up direction refers to the direction toward the Z point from the start point (the down direction refers to the opposite direction), and has nothing to do with the size of coordinate value. Therefore, be sure to confirm the actual operating direction when using this command.
- The PZ-axis will come down after a rise-process command value is output. Therefore, the operation may follow the locus shown below depending on the settings of palletizing arch-trigger points and Z point:

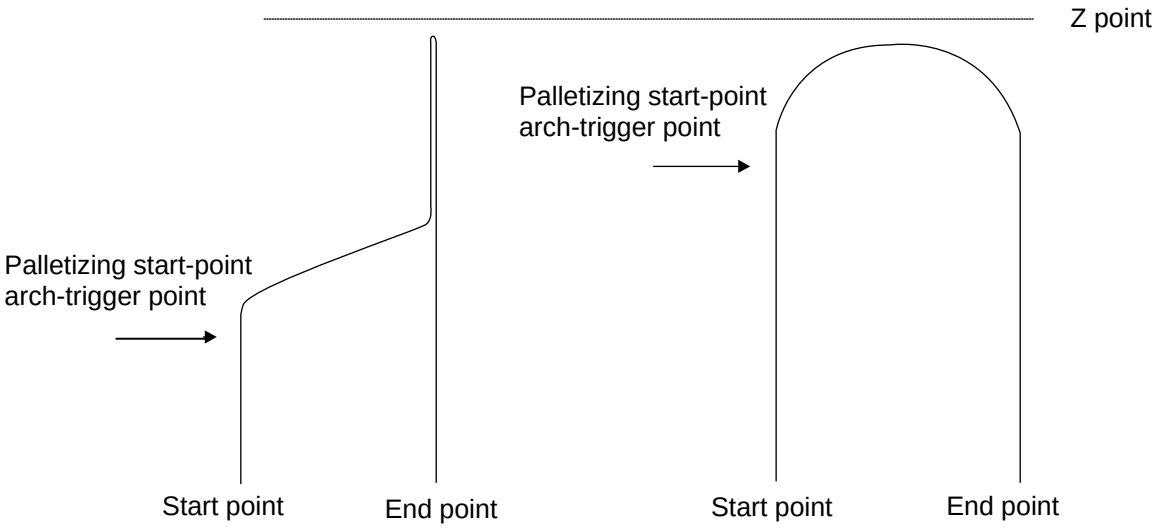

Fig. 5

In this case, change the palletizing arch triggers and Z point to increase the operation efficiency.

- If palletizing composition is set, axes other than the PX, PY and PZ-axes will also be operated if data is available for such axes. However, the composite axis will start/end operation at positions above the arch triggers.
- Executing this command will not increment the palletizing position number by 1.

- ARCH (Arch motion)

Extension condition (LD, A, O, AB, OB)	Input condition (I/O, flag)	Command, declaration			Output (Output, flag)
		Command, declaration	Operand 1	Operand 2	
Optional	Optional	ARCH	Position number	Position number	PE

Perform arch motion from the current point and move to the specified points.

- Move to the points specified in operand 1, via arch motion.
- Movements in directions other than the arch-motion Z-axis direction will begin after rising from the current point to the start-point arch trigger. After the Z point specified in operand 2 (as the highest point) is passed and movements in directions other than the arch-motion Z-axis direction are complete, the axes will pass near the end-point arch trigger and reach the specified point.
- Palletizing arch triggers must be set using an ATRG command.

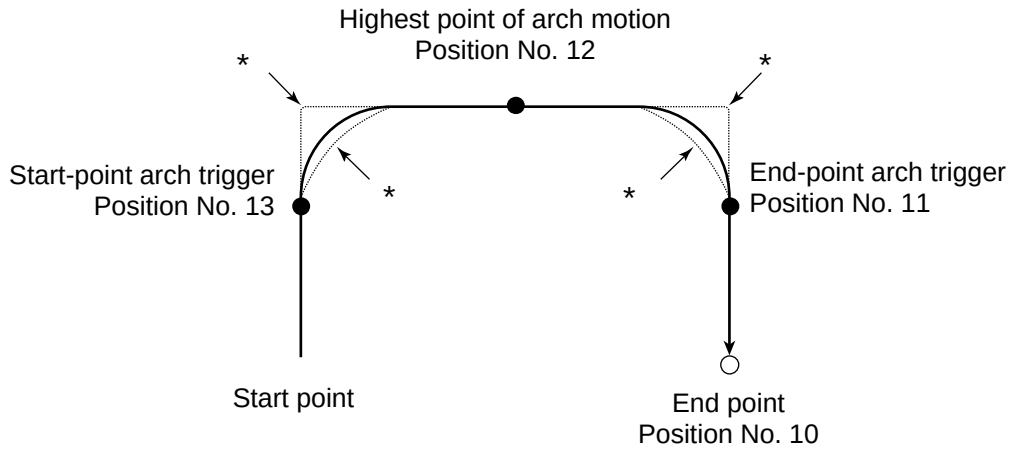


```
ACHZ   3
ATRG   13      11
  |
  |
  |
ARCH   10      12
```

* When the operation is resumed after a pause, depending on the position where the operation is resumed the locus may follow the lines (dotted lines) indicated by asterisks in the diagram for the composite section from ascent to horizontal movement or from horizontal movement to descent. Be careful not to cause interference.

- The arch-motion Z-axis coordinate of the end point will become the arch-motion Z-axis component of the point data specified in operand 1, if any, plus the arch-motion Z-axis offset. If there is no arch-motion Z component, the arch-motion Z-axis coordinate of the end point will become the arch-motion Z-axis coordinate of the start point plus the arch-motion Z-axis offset. (Normally the offset is added to all arch-motion positions, such as the arch triggers and Z point.)
- An error will generate if the start-point arch trigger is set below the start point or the end-point arch trigger is set below the end point. (Note: Up/down has nothing to do with +/– on the coordinate system.)
- The arch-motion Z-axis up direction refers to the direction toward the Z point from the start point (the down direction refers to the opposite direction), and has nothing to do with the size of coordinate value. Therefore, be sure to confirm the actual operating direction when using this command.

- The arch-motion Z-axis will come down after a rise-process command value is output. Therefore, the operation may follow the locus in Fig. 5 given in the aforementioned explanation of PACH command, depending on the settings of arch-trigger points and Z point. In this case, change the arch triggers and Z point to increase the operation efficiency.
- As for the arch-trigger end-point data, if there is any valid axis data other than the data of the arch-motion Z-axis, then operation will be started/ended for the applicable axes in the same manner—but above the arch triggers.
- If arch-trigger composition is set, any valid axes other than those set in the end-point data or the arch-motion Z-axis will also be operated as long as data is available for such axes. In this case, operation of the applicable axes will also be started/ended above the arch triggers.

1.23 Building of Pseudo-Ladder Task

- CHPR (Change task level)

Extension condition (LD, A, O, AB, OB)	Input condition (I/O, flag)	Command, declaration			Output (Output, flag)
		Command, declaration	Operand 1	Operand 2	
Optional	Optional	CHPR	0 or 1	Prohibited	CP

[Function] Specify “1” (User HIGH) if you wish the target task to be processed before other tasks.
This command can also be used with non-ladder tasks.
Task level change (0: User NORMAL, 1: User HIGH) is not a required component, but specifying User HIGH will require a TSLP command explained below. (Without TSLP, tasks of the User NORMAL level will not be processed.)

- TPCD (Specify processing to be performed when input condition is not specified)

Extension condition (LD, A, O, AB, OB)	Input condition (I/O, flag)	Command, declaration			Output (Output, flag)
		Command, declaration	Operand 1	Operand 2	
Prohibited	Prohibited	TPCD	0 or 1	Prohibited	CP

[Function] Specify the processing to be performed when input condition is not specified.
(0: Execute, 1: Follow the input condition in the last executed step)
In a ladder task, always input “1” (Follow the input condition in the last executed step) in operand 1.
In a non-ladder task, always input “0” (Execute). (The default value is “0.”)

- TSLP (Task sleep)

Extension condition (LD, A, O, AB, OB)	Input condition (I/O, flag)	Command, declaration			Output (Output, flag)
		Command, declaration	Operand 1	Operand 2	
Prohibited	Prohibited	TSLP	Time	Prohibited	CP

[Function] Set the time during which the applicable task will sleep, in order to distribute the processing time to other tasks.
If the task level is set to User HIGH, this command must always be specified.
The applicable task will sleep during the set time.
The time in operand 1 is set in msec.
An appropriate time setting must be examined on the actual system. (Normally approx. 1 to 3 is set.)
(If the ladder statement becomes long, state this command multiple times between steps, as necessary.)
This command can also be used with non-ladder tasks.

1.24 Extended Commands

- ECMD1 (Get motor current value (as percentage of rated current))

Extension condition (LD, A, O, AB, OB)	Input condition (I/O, flag)	Command, declaration			Output (Output, flag)
		Command, declaration	Operand 1	Operand 2	
Optional	Optional	ECMD	1	Axis number	CC

This command is supported by controllers of main application version 0.37 or later.
This command can be entered using PC software of version 4.0.0.1 or later, ANSI teaching pendants of version 1.05 or later, or IAI's standard teaching pendants of version 1.31 or later.

[Function] Store in variable 99 the motor current value (percentage of the rated current) of the "axis number" specified in operand 2.

(Note)
- The motor current value to be obtained (as a percentage of the rated current) represents filtered fed-back current data subject to analog error. Accordingly, provide a margin of 5% or more if the obtained motor current is to be compared against the "steady-state (non-push motion) torque limit (maximum limit)" set by expanded command code 250.

[Example]

ECMD	1	2		Extended command 1 Store the motor current value (percentage of the rated current) of axis 2 in variable 99.

- ECMD2 (Get home sensor status)

Extension condition (LD, A, O, AB, OB)	Input condition (I/O, flag)	Command, declaration			Output (Output, flag)
		Command, declaration	Operand 1	Operand 2	
Optional	Optional	ECMD	2	Axis number	CC

This command is supported by controllers of main application version 0.37 or later.
This command can be entered using PC software of version 4.0.0.1 or later, ANSI teaching pendants of version 1.05 or later, or IAI's standard teaching pendants of version 1.31 or later.

[Function] Reflect in the output the home sensor status of the "axis number" specified in operand 2.

(Note) The home sensor status to be obtained is not an electrical H/L level, but a differential operation /non-operation status that takes into consideration axis-specific parameter No. 14, "Home-sensor input polarity."
If "0" (Do not use) is set in axis-specific parameter No. 14, "Home-sensor input polarity," the sensor status (output) is deemed indeterminable and use of the sensor is prohibited.
The output port/flag specified in the output will be operated only when this command is executed.
Accordingly, this command must be executed repeatedly in order to always reflect the sensor status in the output port/flag.

[Example] ECMD 2 3 315 Output the home sensor status of axis 3 to output port No. 315.

- ECMD3 (Get overrun sensor status)

Extension condition (LD, A, O, AB, OB)	Input condition (I/O, flag)	Command, declaration			Output (Output, flag)
		Command, declaration	Operand 1	Operand 2	
Optional	Optional	ECMD	3	Axis number	CC

This command is supported by controllers of main application version 0.37 or later.
This command can be entered using PC software of version 4.0.0.1 or later, ANSI teaching pendants of version 1.05 or later, or IAI's standard teaching pendants of version 1.31 or later.

[Function] Reflect in the output the overrun sensor status of the "axis number" specified in operand 2.

(Note) The overrun sensor status to be obtained is not an electrical H/L level, but a differential operation/non-operation status that takes into consideration axis-specific parameter No. 15, "Overrun-sensor input polarity."
If "0" (Do not use) is set in axis-specific parameter No. 15, "Overrun-sensor input polarity," the sensor status (output) is deemed indeterminable and use of the sensor is prohibited.
The output port/flag specified in the output will be operated only when this command is executed. Accordingly, this command must be executed repeatedly in order to always reflect the sensor status in the output port/flag.

[Example] ECMD 3 1 890 Output the overrun sensor status of axis 1 to global flag No. 890.

- ECMD4 (Get creep sensor status)

Extension condition (LD, A, O, AB, OB)	Input condition (I/O, flag)	Command, declaration			Output (Output, flag)
		Command, declaration	Operand 1	Operand 2	
Optional	Optional	ECMD	4	Axis number	CC

This command is supported by controllers of main application version 0.37 or later.
This command can be entered using PC software of version 4.0.0.1 or later, ANSI teaching pendants of version 1.05 or later, or IAI's standard teaching pendants of version 1.31 or later.

[Function] Reflect in the output the creep sensor status of the "axis number" specified in operand 2.

(Note) The creep sensor status to be obtained is not an electrical H/L level, but a differential operation/non-operation status that takes into consideration axis-specific parameter No. 16, "Creep-sensor input polarity."
If "0" (Do not use) is set in axis-specific parameter No. 16, "Creep-sensor input polarity," the sensor status (output) is deemed indeterminable and use of the sensor is prohibited.
The output port/flag specified in the output will be operated only when this command is executed. Accordingly, this command must be executed repeatedly in order to always reflect the sensor status in the output port/flag.

[Example] ECMD 4 2 315 Output the creep sensor status of axis 2 to output port No. 315.

- ECMD250 (Set torque limit/“torque limit over” detection time)

Extension condition (LD, A, O, AB, OB)	Input condition (I/O, flag)	Command, declaration			Output (Output, flag)
		Command, declaration	Operand 1	Operand 2	
Optional	Optional	ECMD	250	Integer variable number	CC

This command is supported by controllers of main application version 0.37 or later.
This command can be entered using PC software of version 4.0.0.1 or later, ANSI teaching pendants of version 1.05 or later, or IAI’s standard teaching pendants of version 1.31 or later.

[Function] Set the steady-state (non-push motion) torque limit (maximum limit) and “steady-state (non-push motion) torque limit over” detection time.
The data stored in three consecutive integer variables starting from the integer variable number specified in operand 2 is used to change the applicable parameter (including an internal parameter) temporarily.

When operand 2 = n

Variable No. n --- Target axis pattern (entered as a decimal value)
* Example of decimal value entry: When “1” is entered = Axis 1 only
When “2” is entered = Axis 2 only
When “3” is entered = Axes 1 and 2
When “7” is entered = Axes 1, 2 and 3
When “15” is entered = Axes 1, 2, 3 and 4

Variable No. n+1 --- Value set for steady-state (non-push motion) torque limit (maximum limit)
(1% of the rated torque to the value specified in driver card parameter No. 40, “Maximum torque limit (%)”)
* If a value greater than the maximum limit set for each axis is specified, the maximum limit set for each axis will be set.

Variable No. n+2 --- Value set for “steady-state (non-push motion) torque limit (maximum limit) over” detection time
(0 to 20,000 msec)
* Set “1” or a greater value when this command is used to detect interference or heavy load or move an axis.
* If “0” (unlimited) is set, the maximum steady-state (non-push motion) torque limit will be limited to 70% to prevent overheating.

Variable No. n+3 --- “0” is set. (Reserved. * This data may be made accessible in the future.)

Variable No. n+4 --- “0” is set. (Reserved. * This data may be made accessible in the future.)

Processing will be performed according to the parameter below if the period during which the command value has breached the “steady-state (non-push motion) torque limit (maximum limit)” has continued for the “steady-state (non-push motion) torque limit over” detection time or longer in a steady state (non-push motion). Take note, however, that processing according to the parameter below will not be performed if the “steady-state (non-push motion) torque limit over” detection time” is set to “0” (infinite).

All-axis parameter No. 19, “Processing type upon steady-state (non-push motion) torque limit over (priority on driver errors such as overload)”
0: Operation-cancellation level error (Recommended)
(Error No. 420, “Steady-state (non-push motion) torque limit over error)
1: Operation cancellation (The SEL command output turns OFF.)

[Example1]

LET	290	3		Set the target axis pattern (axes 1 and 2) in integer variable 290.
LET	291	80		Set a steady-state torque limit in integer variable 291.
LET	292	1000		Set the “steady-state torque limit over” detection time in integer variable 292.
ECMD	250	290		Read the values of three consecutive variables starting from variable 290. Target axis pattern = Axes 1 and 2 Steady-state torque limit = 80% “Steady-state torque limit over” detection time = 1,000 msec
MOVP	2			Move to position No. 2 under the conditions set by ECMD250.

* When reverting the conditions to their defaults

[Example2]

LET	290	3	Set the target axis pattern (axes 1 and 2) in integer variable 290.
LET	291	1000	Set a steady-state torque limit (maximum limit set for each axis) in integer variable 291.
LET	292	20000	Clear the “steady-state torque limit over” detection time in integer variable 292. (Set “20000” to clear the setting.)
STOP	*290		Clear a low-torque axis deviation counter.
ECMD	250	290	Read the values of three consecutive variables starting from variable 290. Target axis pattern = Axes 1 and 2 Steady-state torque limit = Maximum limit set for each axis (The setting is reverted to the maximum torque.) “Steady-state torque limit over” detection time = 20,000 msec
MOVP	2		Move to position No. 2 at the steady-state torque.

(Note1) When a low torque is set, the work may drop (in the case of a vertical axis, etc.) or overshoot may occur. If the torque is reduced during high-speed operation, overshoot may occur due to insufficient torque.

(Note2) It is dangerous to change the torque to a lower setting during high-speed operation, because the actuator may not decelerate normally due to insufficient torque and overshoot as a result.

(Note3) If positioning operation is performed at low torque, the axis may stop and remain stationary near the target position due to insufficient torque. Before commencing axis movement, always set the “steady-state (non-push motion) torque limit over” detection time to 1 msec or longer to detect a condition of steady-state (non-push motion) torque limit over (timeout).

* If the “steady-state (non-push motion) torque limit over” detection time is set to “0” for the purpose of setting a “torque limit for the supporting axis during engagement (applicable to a horizontal axis only)” and the position data used in the return operation following the engagement operation (as a result of a PUSH command, etc.) includes the coordinates of the supporting axis during engagement (whose torque is limited), positioning operation will be performed during the return operation following the engagement operation to move the actuator position to the coordinates of the axis whose torque is limited, in which case the actuator may stop near the target value due to insufficient torque. When setting position data for the return operation following the engagement operation, be sure to set only the coordinates of the operating axis during engagement (axis used in the PUSH command, etc.)

(Note4) If an extremely low torque is set, a servo-ON axis may move at a very slow speed due to an analog offset error, etc.

(Note5) The torque increases during acceleration/deceleration even under a normal load condition. Accordingly, determine each setting (steady-state torque limit, “steady-state torque limit over” detection time) as deemed appropriate so that a steady-state torque limit over error will not be detected.

(Note6) An “Error No. C6B, Deviation overflow error” or “Error No. CA5, Stop-deviation overflow error” may generate before an “Error No. 420, Steady-state (non-push motion) torque limit over error” is detected. This is normal and does not indicate a malfunction.

(Note7) When changing to a high torque setting from a low torque setting at which axis movement cannot be assured, be sure to issue a STOP command to the low-torque axis to clear the deviation counter before changing to the high torque setting (i.e., while the torque is still low). If the torque setting is changed from low to high while deviation pulses are still stored, the axis may move at an uncontrolled speed and create a dangerous situation.

(Note8) When returning to a normal condition (maximum torque), expressly specify “1000%” as the “steady-state (non-push motion) torque limit (maximum limit)” and “20000 msec” as the “steady-state (non-push motion) torque limit over” detection time.

* If a value exceeding the maximum limit of a given axis is specified as the “steady-state (non-push motion) torque limit (maximum limit)” of that axis, the maximum limit of the axis (between approx. 200 and 400%) will be set.

(Note9) The following values will become effective upon a power ON reset or software reset or when home return is started:
Steady-state (non-push motion) torque limit (maximum limit) = “Driver card parameter No. 40, Maximum torque limit (%)”
“Steady-state (non-push motion) torque limit over” detection time = 20000 msec

(Note10) The new settings of steady-state (non-push motion) torque limit (maximum limit) and “steady-state (non-push motion) torque limit over” detection time will remain effective even after the SEL program ends.
If a system is constructed using this expanded command, therefore, be sure to use this expanded command to expressly set the “steady-state (non-push motion) torque limit (maximum limit)” and “steady-state (non-push motion) torque limit over” detection time in all SEL programs before commencing the operation. If it is assumed that the “steady-state (non-push motion) torque limit (maximum limit)” and “steady-state (non-push motion) torque limit over” detection time will return to their original values when the operation ends in other program, a different “steady-state (non-push motion) torque limit (maximum limit)” or “steady-state (non-push motion) torque limit over” detection time may be applied in the event that the program is aborted due to an error, etc., in which case an unforeseen trouble may result.

(Note11) This expanded command will not rewrite the value of “Driver card parameter No. 40, Maximum torque limit” (main CPU flash memory) (in the non-volatile memory) itself.

Chapter 3 Key Characteristics of Actuator Control Commands and Points to Note

1. Continuous Movement Commands [PATH, CIR, ARC, PSPL, CIR2, ARC2, ARCD, ARCC, CIRS, ARCS]

(1) By running a program with continuous movement commands input in a series of continuous program steps, you can allow the actuators to perform operations continuously without stopping between steps.

```
PATH    1    5
ARC2    6    7
PATH    8    12
```

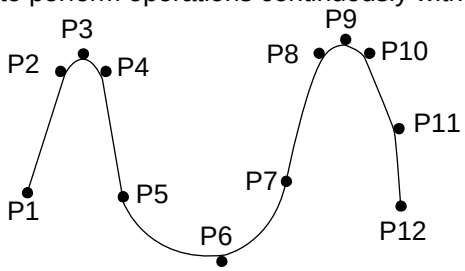

(2) Continuous movement will not be achieved if an input condition is specified for any continuous movement command.

```
        PATH    1    5
20      ARC2    6    7
        PATH    8    12
```

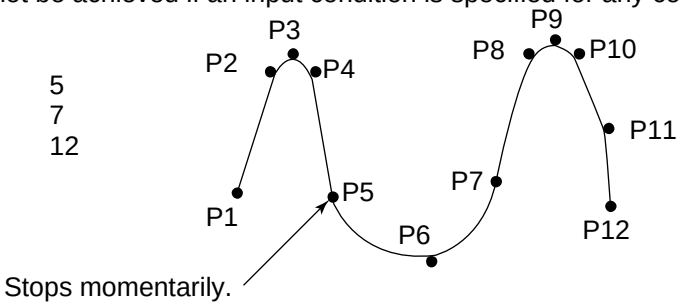

(3) The output field of each command will turn ON as the end position of that command approaches. Only with the last command in a series of continuous movement commands, the output will turn ON upon completion of operation (if there is no input condition).

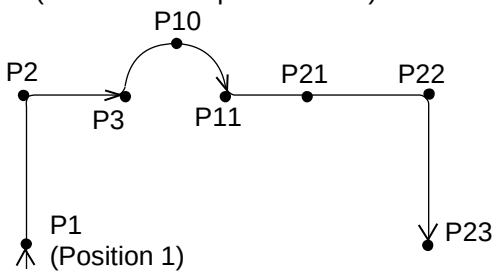

[Example 1]

```
(POTP = 1)
POTP    1
 :
 :
 :
PATH    1    3    308
ARC2    10   11   311
PATH    21   23   312
 :
 :
 :
```

Output field	Timing
308	Turn ON as P1 approaches.
309	Turn ON as P2 approaches.
310	Turn ON as P3 approaches.
311	Turn ON as P11 approaches.
312	Turn ON as P21 approaches.
313	Turn ON as P22 approaches.
314	Turn ON when P23 operation is complete.

[Example 2]

```
(POTP = 0)
PATH    1    3    308
ARC2    10   11   311
```

Output field	Timing
308	Turn ON as P3 approaches.
311	Turn ON as P11 approaches.
312	Turn ON when P23 operation is complete.

```
        PATH    21      23      312
```

[Example 3] If an input condition is specified, the output will turn ON upon completion of operation in the step before the one in which the input condition is specified.

```
        POTP    1
         :
         :
         :
        PATH    1       3       308
20      ARC2    10      11      311
        PATH    21      23      312
```

Output field	Timing
308	Turn ON as P1 approaches.
309	Turn ON as P2 approaches.
310	Turn ON when P3 operation is complete.
311	Turn ON as P11 approaches.
312	Turn ON as P21 approaches.
313	Turn ON as P22 approaches.
314	Turn ON when P23 operation is complete.

(4) When executing continuous movement commands sequentially, the controller is calculating approx. 100 positions ahead. This is why the steps are displayed continuously on the PC screen or teaching-pendant screen, regardless of the actual operation. The last step in the continuous operation section executed by continuous movement commands will wait for the applicable operation to complete.

```
         :
         :
         :
        PATH    1       5
        ARC     6       7
        PATH    8       12
        BTON    310
         :
         :
         :
```

Actuator operation

Step displayed on the PC software or teaching pendant

(5) Do not allow the output fields to duplicate in the continuous operation section executed by continuous movement commands.
Duplicating output fields in the continuous operation section will not achieve the expected result. The output field will turn OFF at the start of processing of each command.

```
        POTP    1
        PATH    1       5       305
         :
         :
         :
        PATH    11      15      304
```

Do not let outputs 305 through 308 to duplicate, as in the example shown at left.

Continuous operation section executed by continuous movement commands

The final output status of duplicate 305 through 308 is indeterminable, because it is affected by the positioning calculation time and the relationship of durations of actual operations.

(6) The actuator can be moved continuously along a series of continuous positions including one discontinuous position. Specify the position number corresponding to the discontinuous position as both the start position number and end position number of a PATH command. Position No. 6 is the discontinuous point to be passed in this example.

The actuator will move continuously along the path of position Nos. 1 → 2 → 3 → 4 → 6 → 9 → 10.

```
        PATH    1       4
        PATH    6       6
        PATH    9       10
```

Discontinuous position

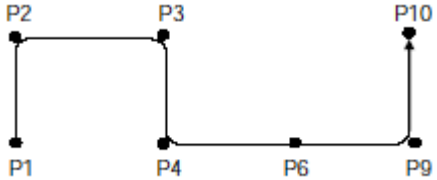

2. PATH/PSPL Commands

When executing a PATH or PSPL command, pay attention to the locus because it will change if the acceleration/deceleration is different between points.
The locus can be fine-tuned by changing the acceleration/deceleration, but different acceleration/deceleration settings between points will prevent smooth transition of speeds when moving from one position to another.
If there is a large difference in deceleration/acceleration between points and the positioning distance is small, the speed may drop. Exercise caution.

3. CIR/ARC Commands

The processing by a CIR or ARC command resembles moving along a polygon with a PATH command.
A small division angle may cause the speed to drop.
CIR2, ARC2, ARCD and ARCC commands actually perform arc interpolation.

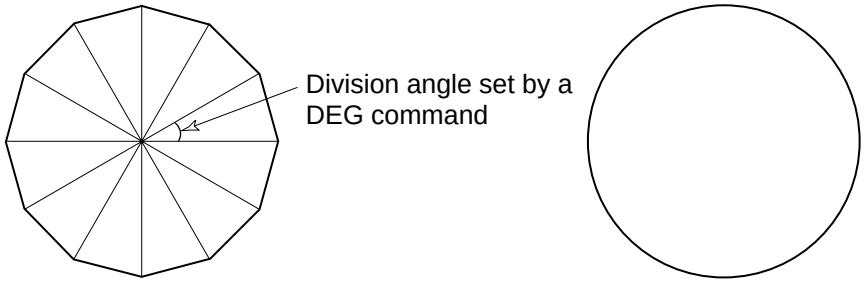

CIR　　CIR2

4. CIR2/ARC2/ARCD/ARCC Commands

With a CIR2, ARC2, ARCD or ARCC command, the speed can be changed (only in the arc interpolation section) by inputting a speed for the point specified in operand 1. These commands are effective when you must lower the speed partially because the radius is small and the arc locus cannot be maintained inside the allowable range.

The speed and acceleration will take valid values based on the following priorities:

Priority	Speed	Acceleration (deceleration)
1	Setting in the position data specified in operand 1	Setting in the position data specified in operand 1
2	Setting by VEL command	Setting by ACC (DCL) command
3		Default acceleration in all-axis parameter No. 11 (Default deceleration in all-axis parameter No. 12)

Chapter 4 Palletizing Function

The SEL language used by the X-SEL Controller provides palletizing commands that support palletizing operation. These commands allow simple specification of various palletizing settings and enable arch motion ideal for palletizing.

1. How to Use

Use palletizing commands in the following steps:

(1) Palletizing setting
Set palletizing positions, arch motion, etc., using palletizing setting commands.

(2) Palletizing calculation
Specify palletizing positions using palletizing calculation commands.

(3) Palletizing movement
Execute motion using palletizing movement commands.

2. Palletizing Setting

Use the palletizing setting commands to set items necessary for palletizing operation. The setting items include the following:

(1) Palletizing number setting --- Command: BGPA
At the beginning of a palletizing setting, determine a palletizing number using a BGPA command to declare the start of palletizing setting.
At the end, declare the end of palletizing setting using an EDPA command.

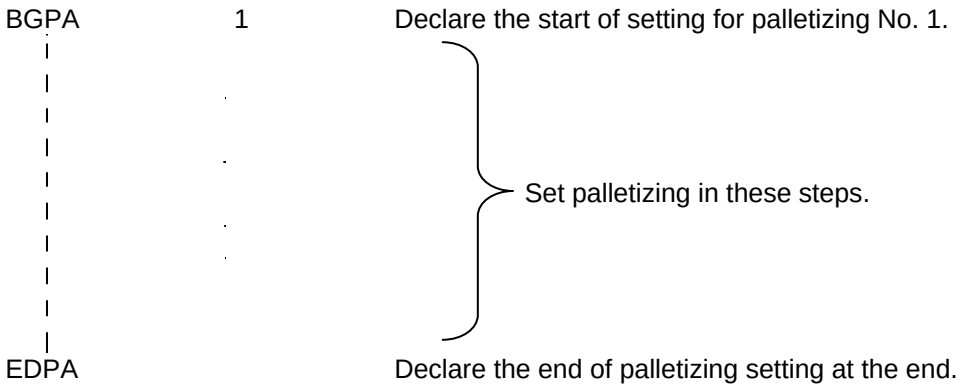

A maximum of 10 sets (palletizing Nos. 1 to 10) of palletizing setting can be specified for each program.

(2) Palletizing pattern --- Command: PAPN
Select a pattern indicating the palletizing order.
The two patterns illustrated below are available.
The encircled numbers indicate the order of palletizing and are called “palletizing position numbers.”

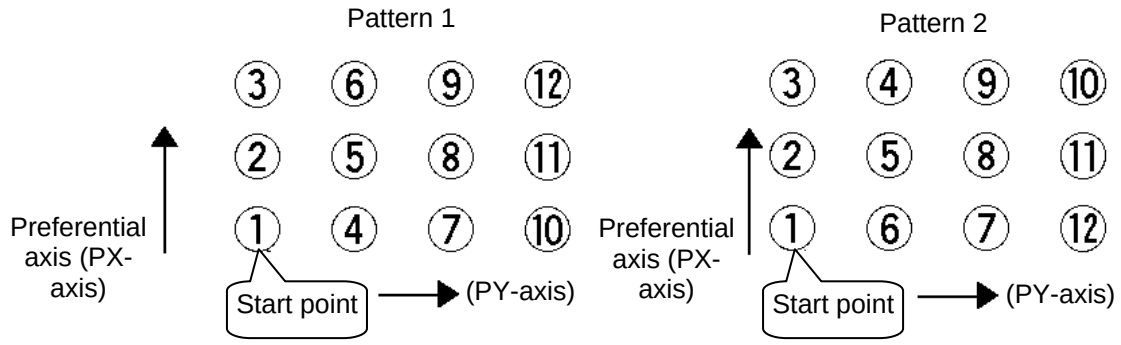

Fig. 1

PAPN	2		When pattern 2 is selected (Setting is not necessary if pattern 1 is selected.)

The row from 1 to 3 to be placed first is called the “preferential axis (PX-axis),” while the other direction comprising the palletizing plane is called the “PY-axis.”

(3) Palletizing counts --- Command: PAPI
Set the palletizing counts.

PAPI	3	4	Count for preferential axis (PX-axis): 3, Count for PY-axis: 4

(4) Palletizing position setting
Palletizing position setting is performed mainly by method A or B, as explained below. Set the palletizing positions for each palletizing setting based on method A or B.

	Setting method	Commands
A	3-point teaching method Set three position-data points specifying the palletizing positions.	PAPS
B	Method to set palletizing positions in parallel with the actuators Set from the palletizing axes, palletizing reference point and palletizing pitches.	PASE, PAST, PAPT

A. 3-point teaching method

To set the palletizing positions by 3-point teaching, store desired positions in position data fields as three continuous position data and then specify the first position number using a PAPS command. This method allows you to set the PX-axis and PY-axis as three-dimensional axes not parallel with the actuators and not crossing with each other.
In the example shown below, position data ①, ③ and ⑩ are stored in three continuous position data fields.

When three points are taught from position No. 11

Position No. 11 ①: Start point (First palletizing position)
Position No. 12 ③: Palletizing position corresponding to the end point in the PX-axis direction
Position No. 13 ⑩: Palletizing position corresponding to the end point in the PY-axis direction
The encircled numbers indicate palletizing position numbers (palletizing order).

Use a PAPS command to specify the position number corresponding to the start point.

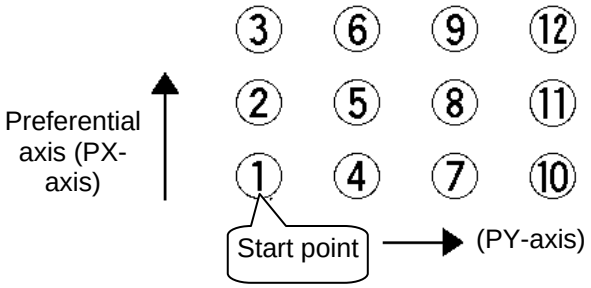

Fig. 1

```
PAPS        11
```

The pitches are calculated automatically from the count set for each axis.
In 3-point teaching, you can specify position data for two axes or three axes. If data are specified for three axes, the palletizing plane will become a three-dimensional plane.

B. Method to set palletizing positions in parallel with the actuators

Palletizing reference point: Store the position data of the start point (palletizing position No. 1) in a position data field and specify the applicable position number using a PAST command, as shown below.

Palletizing pitches: Use a PAPT command to specify the pitches in the PX-axis and PY-axis directions.

Palletizing axes: Use a PASE command to specify the two axes, one representing the PX-axis direction and the other representing the PY-axis direction, to be used in palletizing.

(An actuator axis number parallel with the preferential axis (PX-axis) and another perpendicular to the preferential axis)

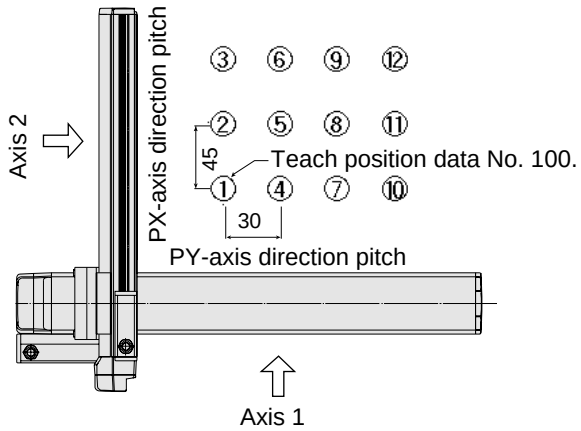

PAST	100		Teach position data No. 100 as the start point.
PAPT	45	30	The PX-axis direction pitch is 45 mm and the PY-axis direction pitch is 30 mm.
PASE	2	1	Set axis 2 as the preferential axis (PX-axis) and axis 1 as the axis perpendicular to the preferential axis.

(Note) When the above palletizing axes, palletizing pitches and palletizing reference point are used, the PX-axis and PY-axis must be parallel with the actuators and crossing with each other.

Select either method A or B for each palletizing setting.

(5) Zigzag setting --- Command: PSLI
Use a PSLI command to set a zigzag layout as shown below.
Zigzag offset: Offset amount in the preferential-axis direction, which will be applied when even-numbered rows are placed.
"Even-numbered rows" refer to the rows occurring at the even numbers based on the row placed first representing the first row.

Zigzag count: Number in the even-numbered rows. Two in the diagram below.

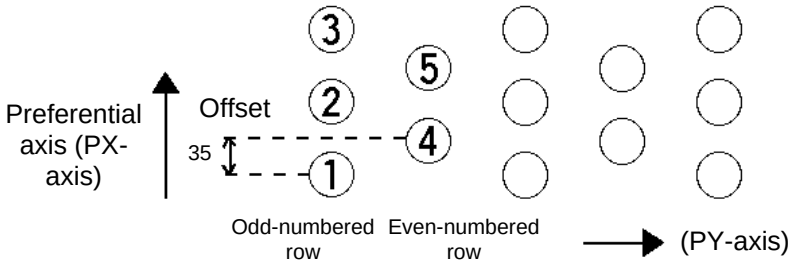

PSLI 35 2

(6) Arch-motion setting
(a) Arch-motion Z-axis number --- Command: ACHZ
(b) Arch-motion Z-axis offset --- Command: OFAZ
(c) Arch-motion composition --- Command: AEXT
Composition data refers to position data of any additional axis you wish to use in arch-motion operation, other than the valid end-point axes or arch-motion Z-axis. Examples include rotation angle.
Note that operation of the composite axis will start and end above the arch triggers.
In an arch-motion composition setting command, specify a position number storing arch-motion composition data.
(d) Arch triggers --- Command: ATRG
The arch-trigger settings used for arch motion include the items specified below.
In an arch-trigger setting command, specify position numbers storing arch-trigger coordinate data.
(d-1) Start-point arch trigger
Specify when to start moving in other axis direction after the start of arch motion from the start point, as an arch-motion Z-direction coordinate position reached.
Start-point arch trigger = Z1
(d-2) End-point arch trigger
Specify when to end moving in other axis direction during downward arch motion, as an arch-motion Z-direction coordinate position reached.
End-point arch trigger = Z3

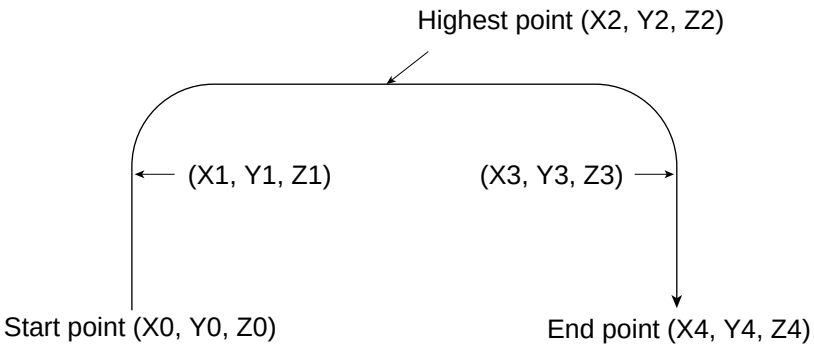

(7) Palletizing arch-motion setting
(a) Palletizing Z-direction axis number --- Command: PCHZ
(b) Palletizing Z-axis offset --- Command: OFPZ
(c) Palletizing composition --- Command: PEXT
Composition data refers to position data of any additional axis you wish to use with palletizing movement commands, other than the PX, PY (and PZ)-axes. Examples include rotation angle.
Note that operation of the composite axis will start and end above the palletizing arch triggers.
In a palletizing-composition setting command, specify a position number storing palletizing composition data.

(d) Palletizing arch triggers --- Command: PTRG
If the end point is a palletizing point, a palletizing arch trigger must be set just like an arch trigger.
In a palletizing arch-trigger setting command, specify position numbers storing palletizing arch-trigger coordinate data.
(d-1) Palletizing start-point arch trigger
(d-2) Palletizing end-point arch trigger

3. Palletizing Calculation

The items that can be operated or obtained using palletizing calculation commands are shown below:

(1) Palletizing position number Commands --- PSET, PINC, PDEC, PTNG
Number showing the ordinal number of a palletizing point.
(In Fig. 1 given in the explanation of palletizing pattern, the encircled numbers are palletizing position numbers.)

Always set this command before executing a palletizing movement command (excluding ARCH) --- PSET

For example, executing a palletizing movement command by setting 1 as the palletizing position number will move the axes to the start point. Executing a palletizing movement command by setting 2 as the palletizing position number will move the axes to the point immediately next to the start point in the PX-axis direction.

(2) Palletizing angle Command --- PARG
Angle formed by the physical axis and the palletizing preferential axis (PX-axis) (θ in the figure below).
θ indicates an angle calculated by ignoring the coordinate in the palletizing Z-axis direction.
In the figure below, θ will become a negative value if axis 1 is used as the reference for angle calculation.

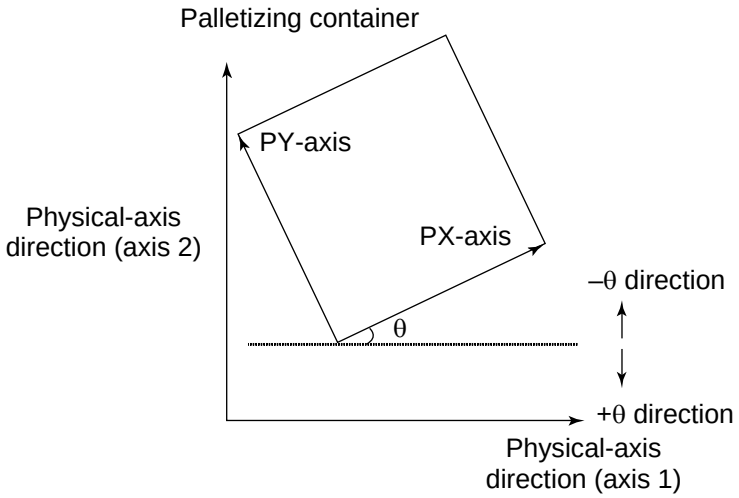

Fig. 4

If the composite axis is a rotating axis, obtaining the palletizing angle and adding it to the composite-axis operation as an offset will allow correction of the composite axis against positional shift of the palletizing container.
With X-SEL commands, executing a “get palletizing angle” command following a palletizing setting via 3-point teaching will automatically obtain the palletizing angle.
If the setting by 3-point teaching was done three-dimensionally, a palletizing Z-axis must be specified.

(3) Palletizing calculation data Command --- PAPG
When a palletizing position number is set, this data refers to the position coordinate data of the palletizing point corresponding to that palletizing position number.
Note that this position coordinate data does not reflect normal offset or palletizing Z-axis offset.

4. Palletizing Movement

Palletizing movement commands include those used to move to a palletizing point and one used to move to an end point specified by position data.

(1) Movement commands to palletizing point --- PMVP, PMVL, PACH
Position coordinates of a two-dimensionally or three-dimensionally placed palletizing point are calculated and movement is performed using the calculated point as the end point. (The axes will move to the palletizing point of the palletizing position number specified in the executed command.)
Two actuator axes will be required to comprise a two-dimensional plane. If a vertical axis (PZ-axis) is required, another axis must be set.
PMVP: Move from the current position to a palletizing point via PTP.
PMVL: Move from the current position to a palletizing point via interpolation.
PACH: Move from the current position to a palletizing point via arch motion.
Palletizing arch motion must be set in a palletizing setting.

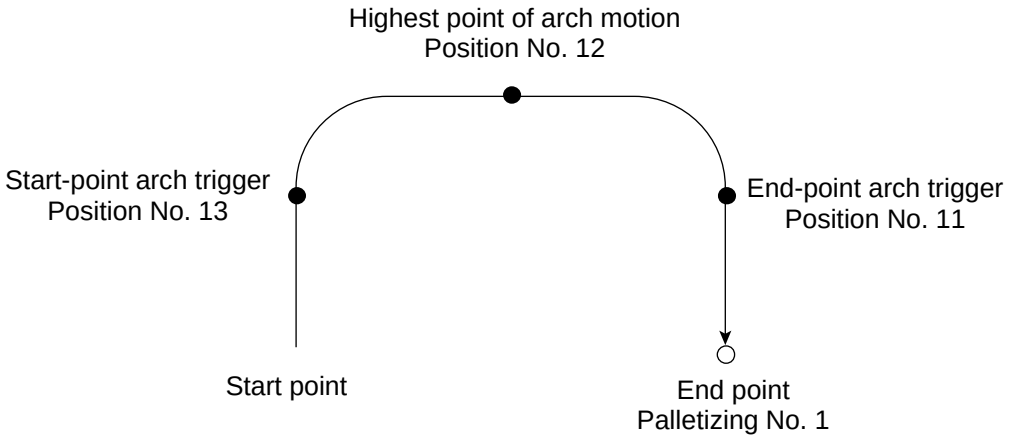


```
PCHZ      3
PTRG      11      13
  |
  |
  |
PACH      1       12
```

(2) Movement comment based on end point specified by point data --- ARCH
Perform arch motion using an end point specified by position data.
In the case of a linear movement in parallel with an actuator, operation can be performed only with two axes including the applicable axis and the PZ-axis.
Arch motion must be set.

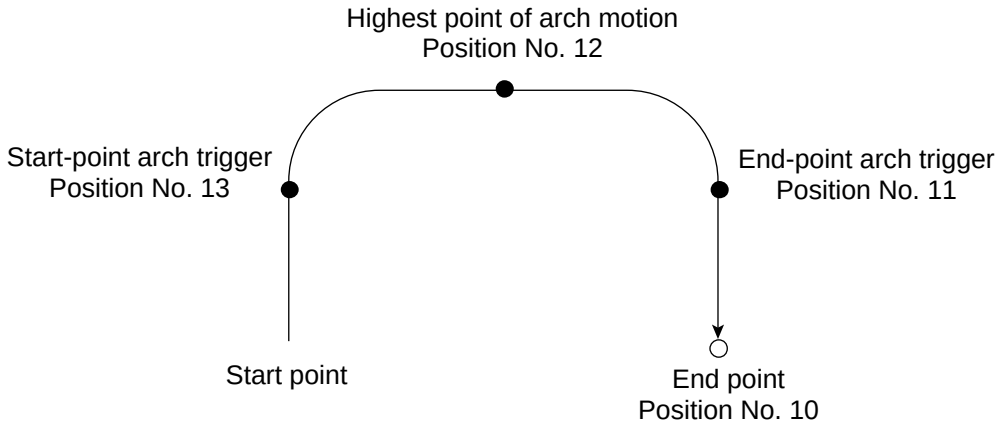


```
ACHZ      3
ATRG      13      11
  |
  |
  |
ARCH      10      12
```

5. Program Examples

(1) Simple program example (two-axis specification) using PAPS (set by 3-point teaching)
The example below specifies movement only and does not cover picking operation.

Step	E	N	Cnd	Cmnd	Operand 1	Operand 2	Pst	Comment
1				BGPA	1			Start setting palletizing No. 1.
2				PAPI	3	4		Palletizing counts: 3 x 4
3				PAPS	2			Set by 3-point teaching.
4				EDPA				End setting palletizing No. 1.
5								
6				VEL	200			Speed: 200 mm/sec
7				MOVL	1			Move to picking position.
8				PSET	1			Set palletizing position number to 1.
9				TAG	1	1		
10				PMVL	1			Move to palletizing position via interpolation.
11				MOVL	1			Move to picking position via interpolation.
12				PINC	1		600	Increment palletizing position number by 1.
13			600	GOTO	1			Beginning of loop if PINC is successful.
14				EXIT				End

No.	Axis 1	Axis 2	Vel	Acc	Dcl	Remarks
1	10.000	10.000				Picking position
2	70.000	70.000				Reference-point position data
3	148.000	71.000				PX-axis end-point position data
4	69.000	143.000				PY-axis end-point position data

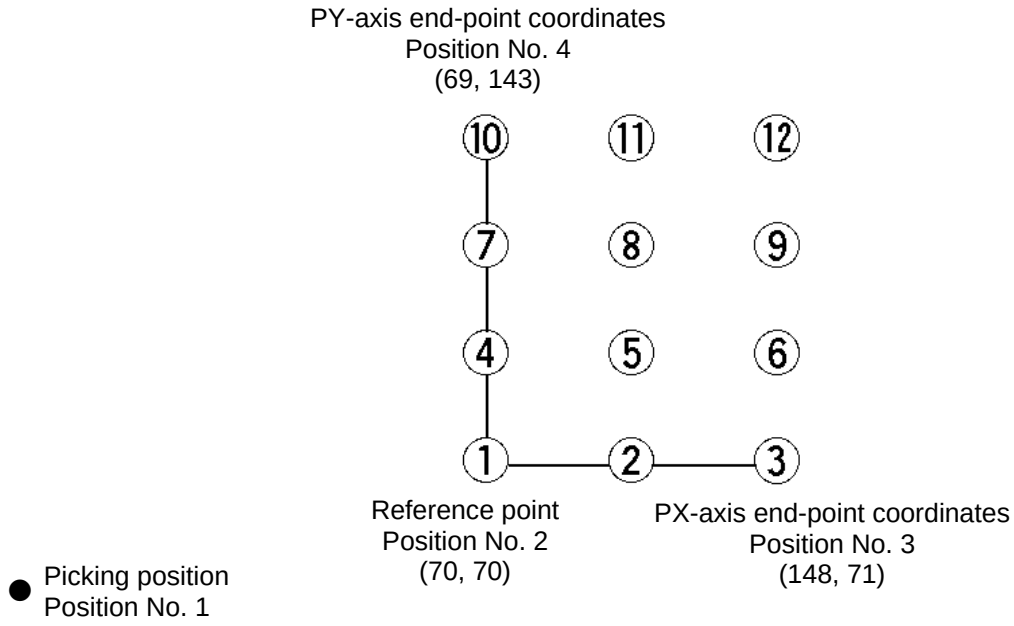

(2) Simple program example (two-axis specification) using PAPT, PAST and PASE
The example below specifies movement only and does not cover picking operation.

Step	E	N	Cnd	Cmnd	Operand 1	Operand 2	Pst	Comment
1				BGPA	1			Start setting palletizing No. 1.
2				PAPI	3	4		Palletizing counts: 3 x 4
3				PASE	1	2		PX-axis = Axis 1, PY-axis = Axis 2
4				PAPT	40	25		Pitch: X = 40, Y = 25
5				PAST	2			Position No. 2 as reference point
6				EDPA				End setting palletizing No. 1.
7								
8				VEL	200			Speed: 200 mm/sec
9				MOVL	1			Move to picking position.
10				PSET	1	1		Set palletizing position number to 1.
11				TAG	1			
12				PMVL	1			Move to palletizing position via interpolation.
13				MOVL	1			Move to picking position via interpolation.
14				PINC	1		600	Increment palletizing position number by 1.
15			600	GOTO	1			Beginning of loop if PINC is successful.
16				EXIT				End

No.	Axis 1	Axis 2	Vel	Acc	Dcl	Remarks
1	10.000	10.000				Picking position
2	70.000	70.000				Reference-point position data

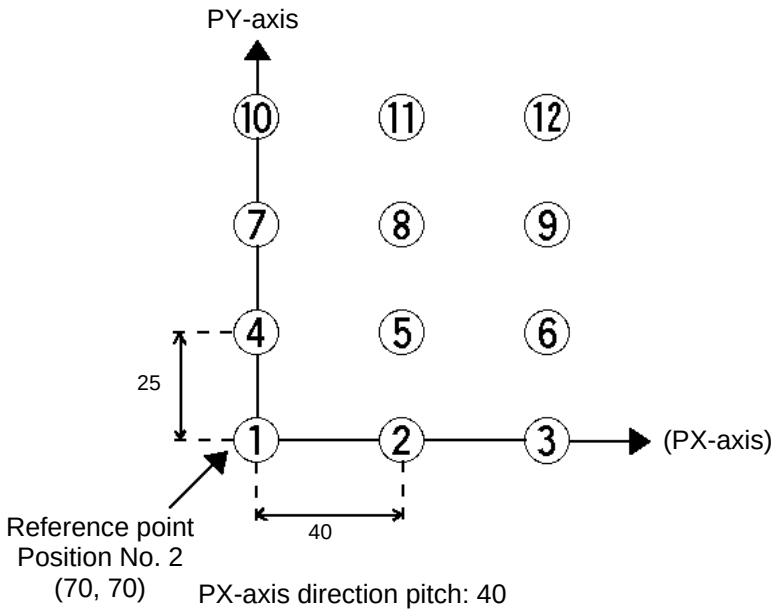

PX-axis direction pitch: 40
PY-axis direction pitch: 25
The PX-axis and PY-axis are parallel with axis 1 and axis 2, respectively.

● Picking position
Position No. 1

(3) Simple program example using PAPS (set by 3-point teaching)
The example below specifies movement only and does not cover picking operation.

Step	E	N	Cnd	Cmnd	Operand 1	Operand 2	Pst	Comment
1				BGPA	1			Start setting palletizing No. 1.
2								
3				PAPI	5	7		Palletizing counts: 5 x 7
4				PAPN	1			Palletizing pattern 1
5				PAPS	1			Set by 3-point teaching.
6								Use position No. 1 data.
7				PSLI	20	4		Zigzag offset = 20 mm
8				PCHZ	3			Palletizing Z-axis = Axis 3
9				PTRG	4	4		Set palletizing arch triggers.
10								Use position No. 4 data.
11				OFPZ	100			PZ-axis offset = 100 mm
12				PEXT	6			Set palletizing composition.
13								Use position No. 6 data.
14				EDPA				
15								
16				PARG	1	1		Get palletizing angle.
17								Stored in variable 199.
18				PPUT	4	6		Store angle data of variable
19								199 in axis 4 at position No. 6.
20	*//							
21								
22				ATRG	4	4		Set arch triggers.
23								Use position No. 4 data.
24				ACHZ	3			Set arch-motion Z-axis.
25								
26				ACC	0.3			Acceleration
27				DCL	0.3			Deceleration
28				VLMX				
29								
30				PSET	1	1		Set palletizing position number to 1.

Step	E	N	Cnd	Cmnd	Operand 1	Operand 2	Pst	Comment
31				MOVP	8			Move to picking position.
32								
33				TAG	1			Beginning of loop processing
34				PACH	1	9		Palletizing arch motion
35								Z point specified by Position No. 9
36				ARCH	8	9		Arch motion
37								Z point specified by Position No. 9
38				PINC	1		600	Increment palletizing position number by 1.
39			600	GOTO	1			Go to beginning of loop if PINC is successful.
40								
41				EXIT				End of task
42								
43								
44								
45								

No.	Axis 1	Axis 2	Axis 3	Axis 4	Remarks
1	100.000	100.000	100.000	*.***	Reference point data
2	260.000	105.000	100.000	*.***	PX-axis end-point data
3	95.000	280.000	100.000	*.***	PY-axis end-point data
4	*.***	*.***	50.000	*.***	Arch-trigger point data
5	*.***	*.***	*.***	*.***	(Not used)
6	*.***	*.***	*.***	-1.79	Palletizing-composition point data
7	*.***	*.***	*.***	*.***	(Not used)
8	0.000	0.000	100.000	0.000	Picking-position point data
9	*.***	*.***	0.000	*.***	Z point data
10					

Schematic diagram of placement-point positions based on the above program

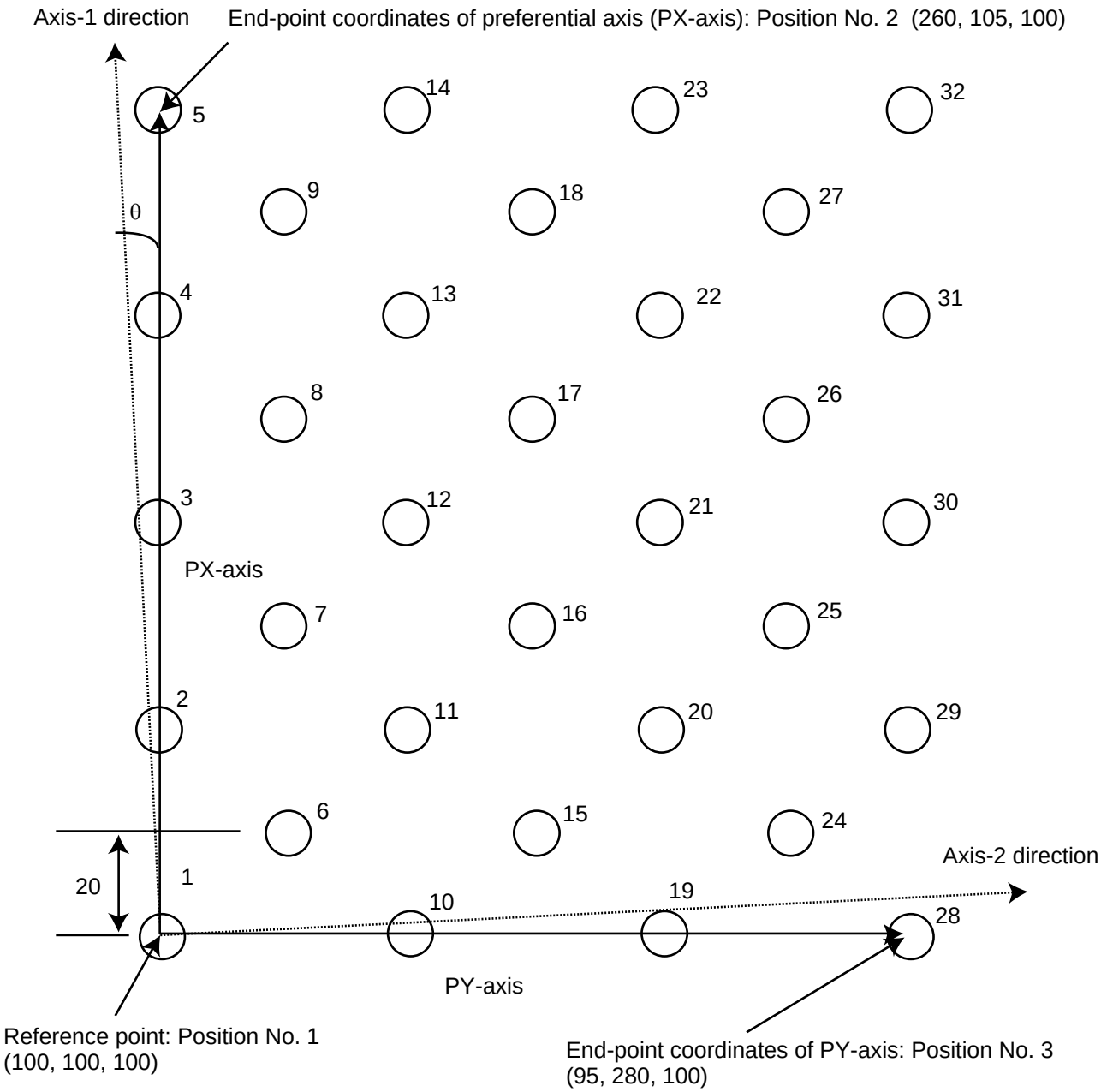

- The number shown at the top right of each circle indicates a palletizing position number.
- Count in PX-axis direction = 5, Count in PY-axis direction = 7
- Zigzag offset: 20
- Zigzag count: 4
- Pallet shift angle θ: –1.79°

(4) Simple program example using PASE, PAPT and PAST
The example below specifies movement only and does not cover picking operation.

Step	E	N	Cnd	Cmnd	Operand 1	Operand 2	Pst	Comment
1				BGPA	1			Start setting palletizing No. 1.
2								
3				PAPI	5	7		Palletizing counts: 5 x 7
4				PAPN	1			Palletizing pattern 1
5				PASE	1	2		PX-axis = Axis 1, PY-axis = Axis 2
6				PAPT	40	30		Pitch (X = 40 mm, Y = 30 mm)
7				PAST	1			Set reference point data.
8								Use position No. 1 data.
9				PSLI	20	4		Zigzag offset = 20 mm
10								Zigzag count = 4
11				PCHZ	3			Palletizing Z-axis = Axis 3
12				PTRG	4	4		Set palletizing arch triggers.
13								Use position No. 4 data.
14				OFPZ	100			PZ-axis offset = 100 mm
15								
16				EDPA				
17								
18	*//							
19				ATRG	4	4		Set arch triggers.
20								Use position No. 4 data.
21				ACHZ	3			Set arch-motion Z-axis.
22								
23				ACC	0.3			Acceleration
24				DCL	0.3			Deceleration
25				VLMX				
26								
27				PSET	1	1		Set palletizing position number.
28				MOVP	8			Move to picking position.
29	*//							
30								

Step	E	N	Cnd	Cmnd	Operand 1	Operand 2	Pst	Comment
31				TAG	1			Beginning of loop processing
32				PACH	1	9		Palletizing arch motion
33								Z point specified by Position No. 9
34				ARCH	8	9		Arch motion
35								Z point specified by Position No. 9
36				PINC	1		600	Increment palletizing position number by 1.
37			600	GOTO	1			Go to beginning of loop if PINC is successful.
38								
39				EXIT				End of task
40								

No.	Axis 1	Axis 2	Axis 3	Axis 4	Remarks
1	100.000	100.000	100.000	*.***	Reference point data
2	*.***	*.***	*.***	*.***	(Not used)
3	*.***	*.***	*.***	*.***	(Not used)
4	*.***	*.***	50.000	*.***	Arch-trigger point data
5	*.***	*.***	*.***	*.***	(Not used)
6	*.***	*.***	*.***	*.***	(Not used)
7	*.***	*.***	*.***	*.***	(Not used)
8	0.000	0.000	100.000	0.000	Picking-position point data
9	*.***	*.***	0.000	*.***	Z point data
10					

Schematic diagram of placement-point positions based on the above program

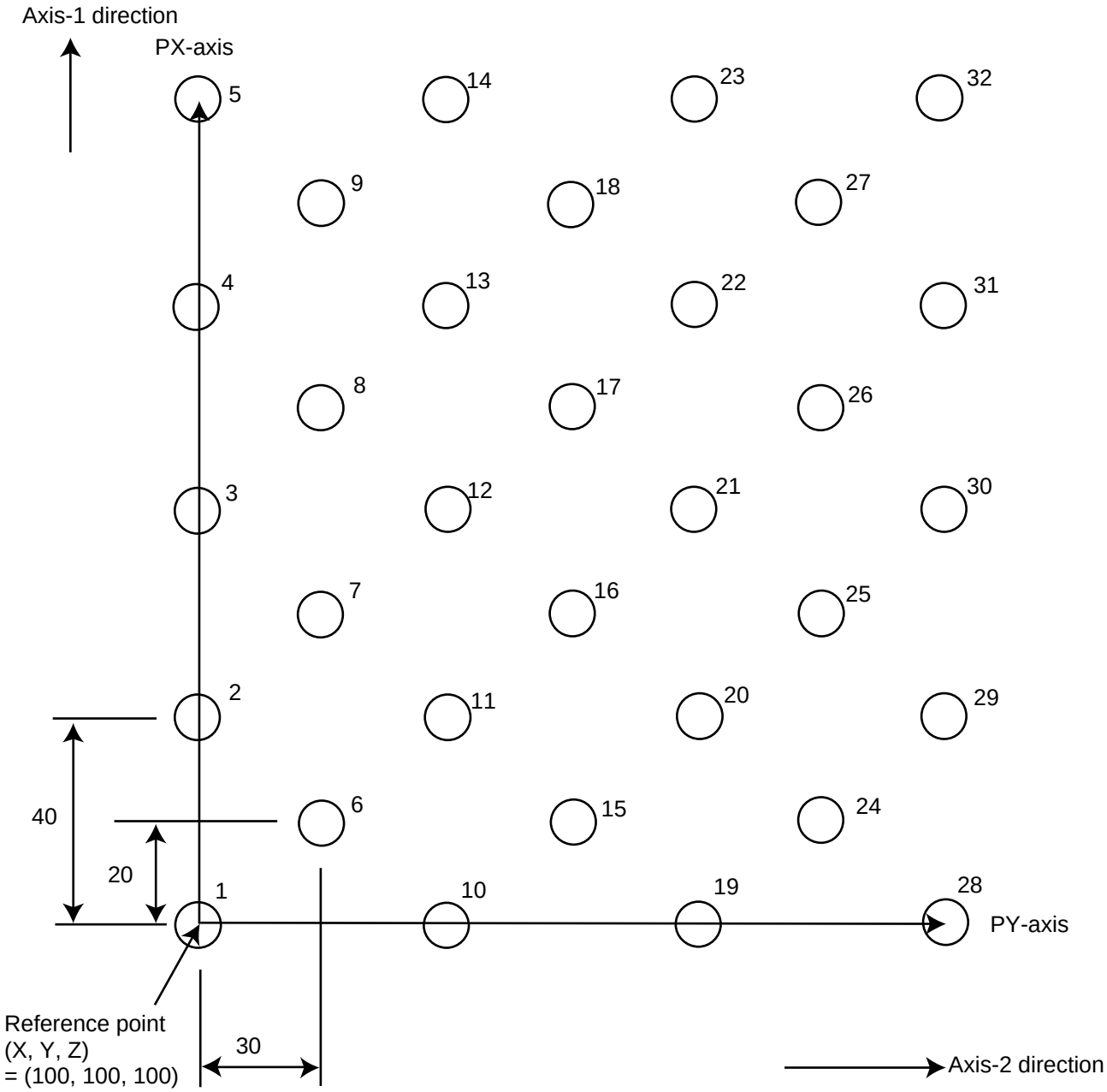

- The number shown at the top right of each circle indicates a palletizing position number.
- Count in PX-axis direction = 5, Count in PY-axis direction = 7
- Pitch in PX-axis direction: 40
- Pitch in PY-axis direction: 30
- Zigzag offset: 20
- Zigzag count: 4

Chapter 5 Pseudo-Ladder Task

With the X-SEL Controller, a pseudo-ladder task function can be used depending on the command and extension condition.
The input format is shown below. Note that this function must be used by expert engineers with a full knowledge of PLC software design.

1. Basic Frame

Extension condition E	N	Input condition Cnd	Command Cmnd	Operand 1	Operand 2	Output Pst	
LD		7001	CHPR	1			
			TPCD	1			
			TAG	1			
⌊ ⌊ ⌊ ⌊ ⌊ ⌊		⌊ ⌊ ⌊ ⌊ ⌊ ⌊	⌊ ⌊ ⌊ ⌊ ⌊ ⌊	⌊ ⌊ ⌊ ⌊ ⌊ ⌊			Ladder statement field
LD		7001	TSLP	1 ~ 100			
⌊ ⌊ ⌊ ⌊ ⌊ ⌊		⌊ ⌊ ⌊ ⌊ ⌊ ⌊	⌊ ⌊ ⌊ ⌊ ⌊ ⌊	⌊ ⌊ ⌊ ⌊ ⌊ ⌊			Ladder statement field
LD		7001	TSLP	1 ~ 100			
LD		7001	GOTO	1			
LD		7001	EXIT				

* * Virtual input 7001: “Normally ON” contact

2. Ladder Statement Field

(1) Extension conditions

LD	.....	LOAD
A	.....	AND
O	.....	OR
AB	.....	AND BLOCK
OB	.....	OR BLOCK

All of the above extension conditions can be used in non-ladder tasks.

(2) Ladder commands

OUTR	.....	Ladder output relay (Operand 1 = Output, flag number)
TIMR	.....	Ladder timer relay (Operand 1 = Local flag number, Operand 2 = Timer setting (sec))

3. Points to Note

- This system only processes software ladders using an interpreter. Therefore, the processing time is much longer than that of a dedicated commercial sequencer.
  (This system is not suitable for large-scale ladder processing.)
- If an extension condition is not specified for steps in which an input condition is specified, the steps will be treated as LD (LOAD).
- Always specify a “normally ON” contact for those steps that must be processed without fail, such as CHPR, TSLP and GOTO. (LD 7001)
  Virtual input 7001: “Normally ON” contact

- The following circuit cannot be expressed. Create an equivalent circuit.

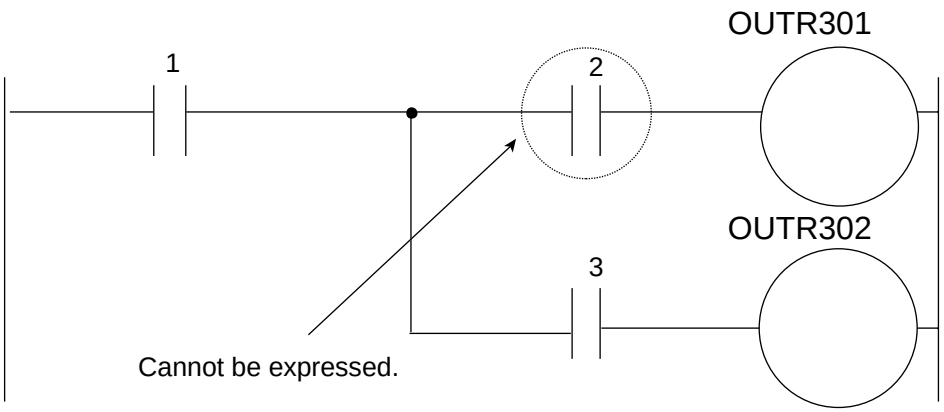

4. Program Example

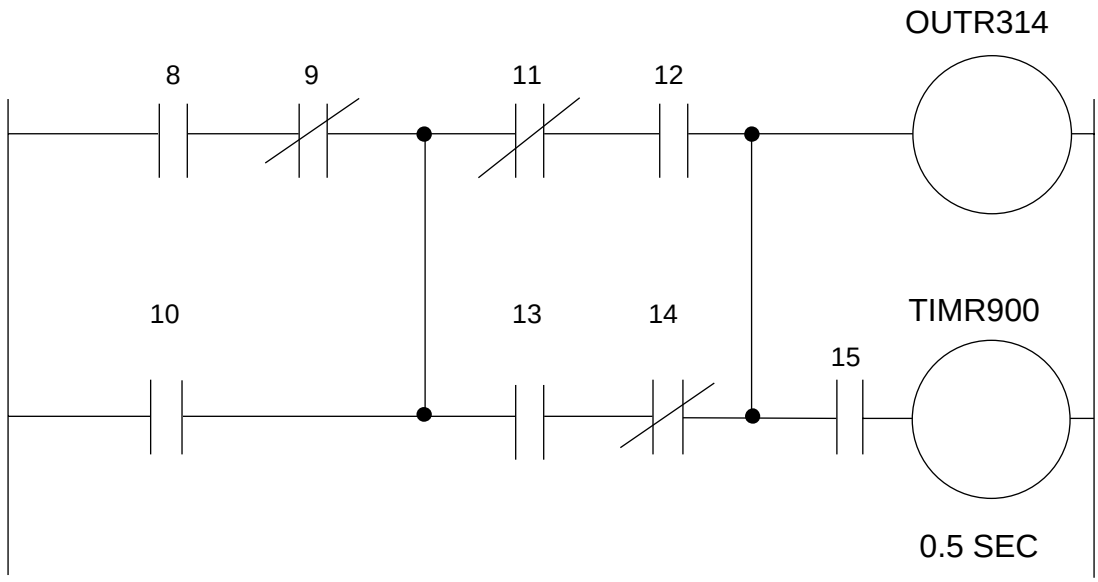

Extension condition E	N	Input condition Cnd	Command Cmnd	Operand 1	Operand 2	Output Pst
LD		7001	CHPR	1		
			TPCD	1		
			TAG	1		
LD		8				
A	N	9				
O		10				
LD	N	11				
A		12				
LD		13				
A	N	14				
OB						
AB			OUTR	314		
A		15	TIMR	900	0.5	
LD		7001	TSLP	3		
LD		7001	GOTO	1		
LD		7001	EXIT			

Chapter 6 Application Program Examples

1. Operation by Jog Command [Doll-Picking Game Machine]

(1) Overview of the system
This system is a doll-picking game machine consisting of axis-1 and axis-2 actuators. Pushbutton switches corresponding to the two axes are provided on an external operation switch box, and these switches are used to move the actuators to a desired position to grab and pick up dolls inside the case.

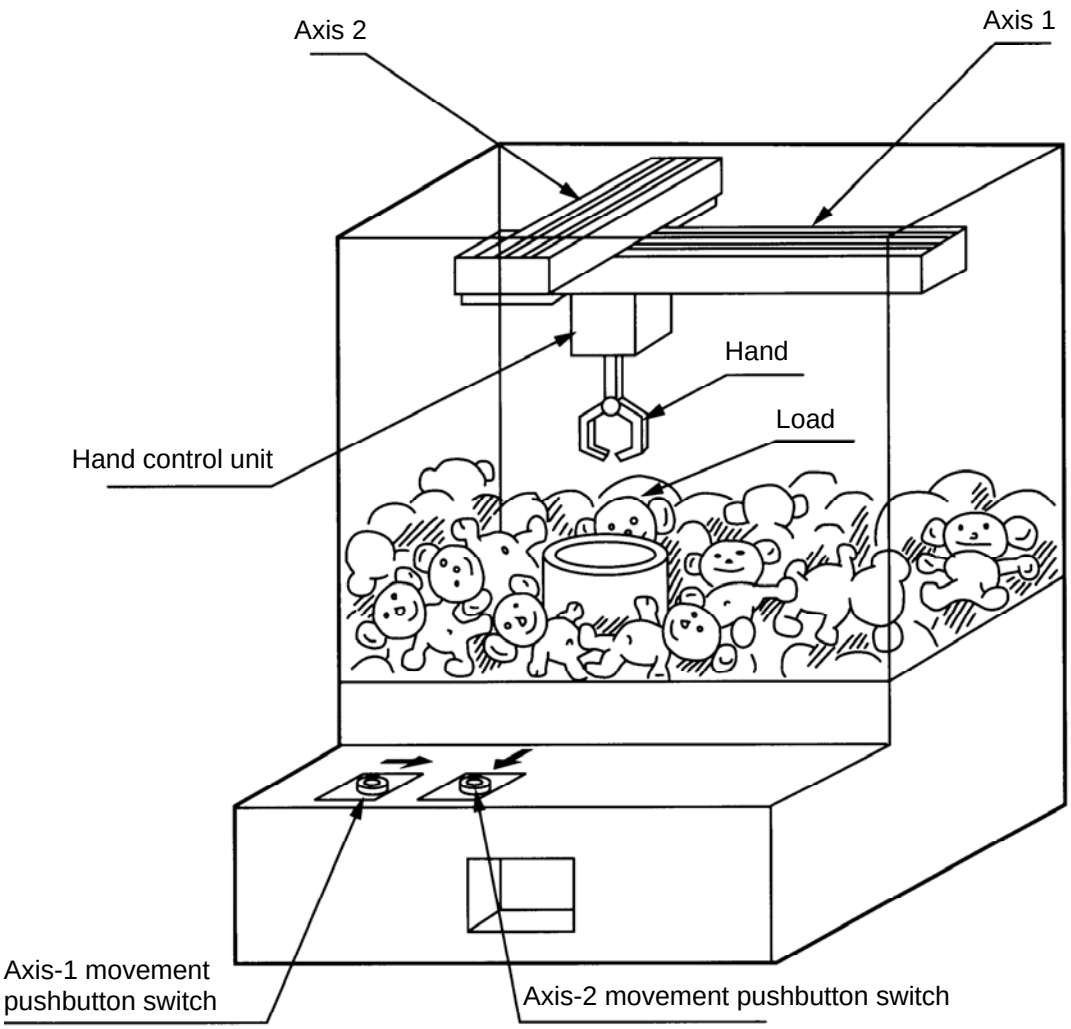

(2) Explanation of the operation

1. Wait for the axis-1 movement pushbutton switch to turn ON.
2. The X-axis moves while the pushbutton switch is ON, and stops when the switch turns OFF.
3. Wait for the axis-2 movement pushbutton switch to turn ON.
4. The Y-axis moves while the pushbutton switch is ON, and stops when the switch turns OFF.
5. Output a start command to the hand control unit.
6. Wait for an operation completion input from the hand control unit.
7. Move to the home after the input is received.

The above operation will be repeated. The operation position, external I/O assignments and operation flow chart of this operation are shown below:

Operation Position

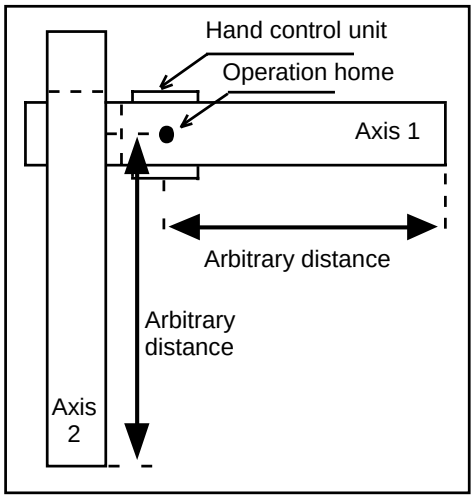

Operation Flow Chart

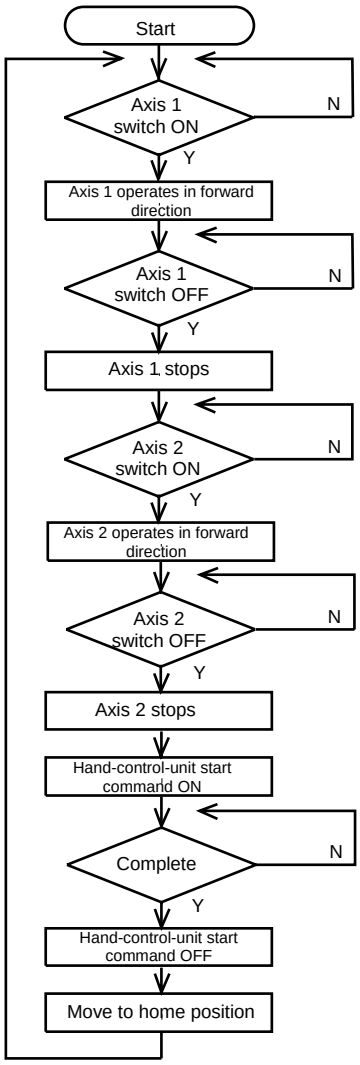

I/O Assignments

Category		I/O No.	Signal name	Specification
X-SEL	Input	16	Axis-1 movement command	Pushbutton switch
		17	Axis-2 movement command	Pushbutton switch
		18	Hand operation completion	External control unit
	Output	309	Hand start command	24 VDC
	* Flag is not used.			

(3) X-SEL Controller application program

Step	E	N	Cnd	Cmnd	Operand 1	Operand 2	Pst	Comment
1				HOME	11			Axes 1 and 2 return to home (servo ON).
2				VEL	400			Set speed to 400 mm/s.
3				TAG	1			
4				WTON	16			Wait for input from axis-1 movement switch.
5				JFWN	1	16		Move forward while axis-1 movement switch is ON.
6				WTON	17			Wait for input from axis-2 movement switch.
7				JFWN	10	17		Move forward while axis-2 movement switch is ON.
8				BTON	309			Start command for external control unit turns ON.
9				WTON	18			Wait for external control unit to complete operation.
10				BTOF	309			Start command for external control unit turns OFF.
11				JBWF	11	18		Axes 1 and 2 move backward while 18 is ON.
12				GOTO	1			Jump to TAG1.
13								
14								
15								
16								
17								
18								
19								
20								
21								
22								
23								
24								
25								
26								
27								
28								
29								
30								
31								
32								

2. Operation by Point Movement Command [Riveting System]

(1) Overview of the system
This system is a riveting system consisting of an XY-table operated by axis-1 and axis-2 actuators and a riveter. By setting a load on the XY-table at the operation home and turning on the start switch, rivets will be driven at the three points specified on the load.

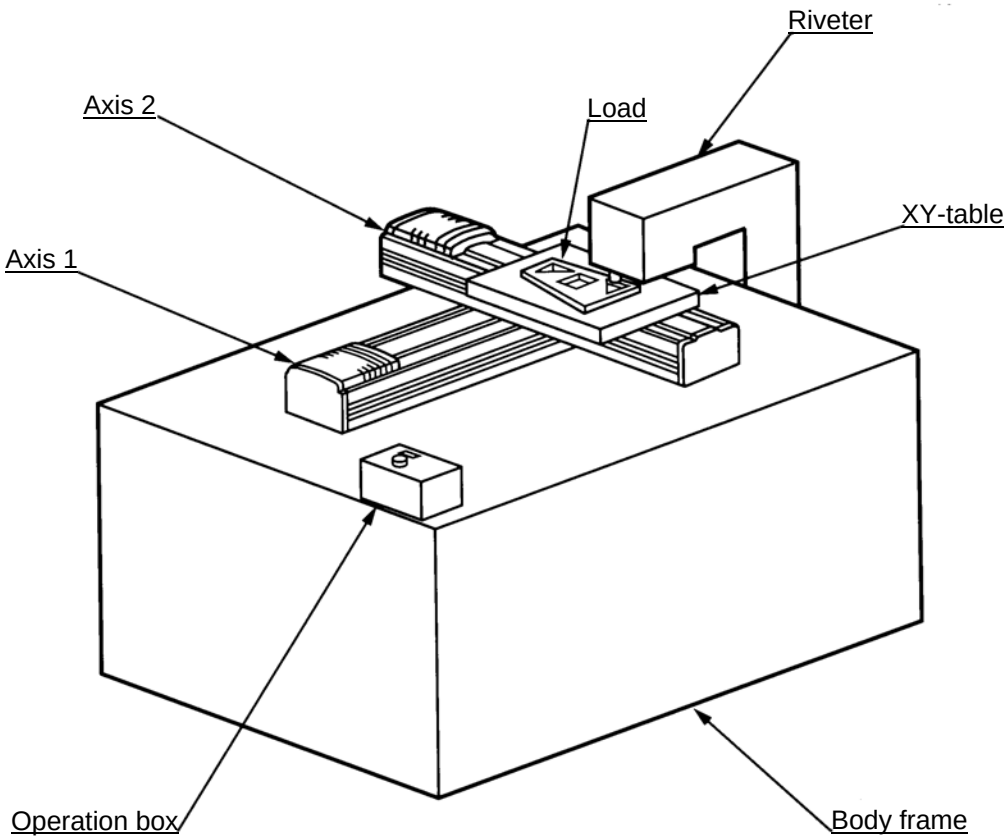

(2) Explanation of the operation

1. The XY-table moves to the operation home (P1) and waits.
2. The operator sets a load on the XY-table and turns on the start switch.
3. The XY-table moves to riveting position No. 1 (P2) on the load and a riveting command is output to the riveter.
4. When the riveter completes the riveting operation and a completion signal is input, the table will move to riveting position No. 2 (P3) and then No. 3 (P4), in the same manner.
5. When all three points have been riveted, the table will return to the operation home (P1).

The above operation will be repeated. The operation position, external I/O assignments and operation flow chart of this operation are shown below:

Operation Position

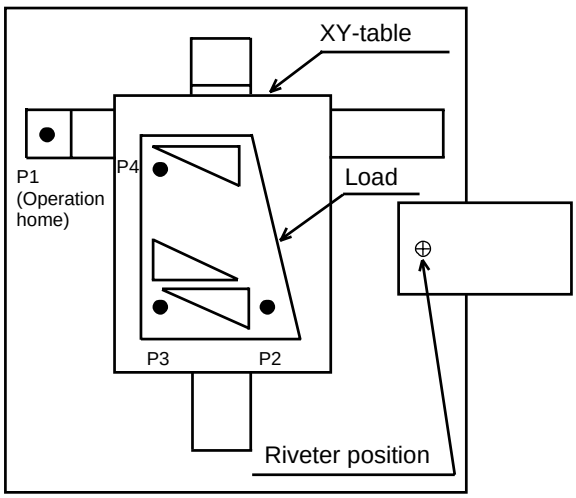

Operation Flow Chart

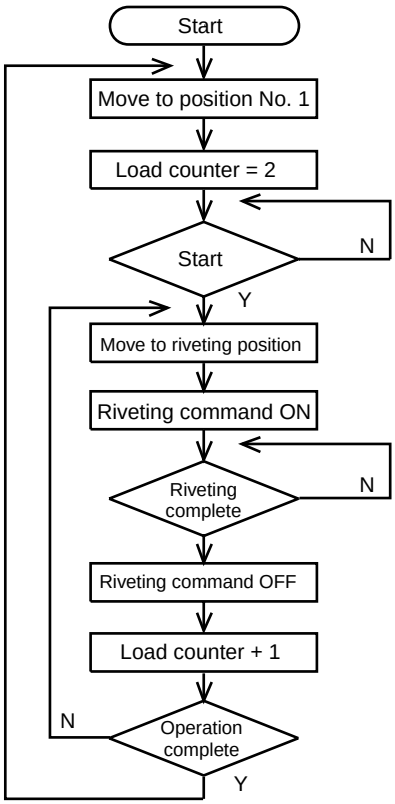

I/O Assignments

Category		I/O No.	Signal name	Specification
X-SEL	Input	16	Start command	Pushbutton switch
		17	Riveting completion	Contact signal
	Output	309	Riveting command	24 VDC
	* Flag is used from 600.			

(3) X-SEL Controller application program

Step	E	N	Cnd	Cmnd	Operand 1	Operand 2	Pst	Comment
1				HOME	11			XY-table returns to home (servo ON).
2				VEL	400			Set speed to 400 mm/s.
3				TAG	1			
4				MOVL	1			Move to position No. 1 (origin of work).
5				LET	1	2		Set 2 in load counter.
6				BTOF	600			Clear completion flag.
7				WTON	16			Wait for start command.
8				TAG	2			
9				MOVL	*1			Move to load counter position.
10				BTON	309			Riveting command turns ON.
11				WTON	17			Wait for riveting to complete.
12				BTOF	309			Riveting command turns OFF.
13				ADD	1	1		Increment load counter by 1.
14				CPEQ	1	5	600	Turns ON flag if operation is complete.
15		N	600	GOTO	2			Jump to TAG2 if not complete.
16				GOTO	1			Jump to TAG1 if complete.
17								
18								
19								
20								
21								
22								
23								
24								
25								
26								
27								
28								
29								
30								
31								
32								

3. Palletizing Operation [Palletizing System]

(1) Overview of the system
This system is a palletizing system consisting of axis-1 and axis-2 actuators and a Z-axis air cylinder. It clamps a load at the load feed point and transfers it onto a pallet, and repeats this operation in a sequence.
(Operation is implemented by an offset command without using a palletizing function.)

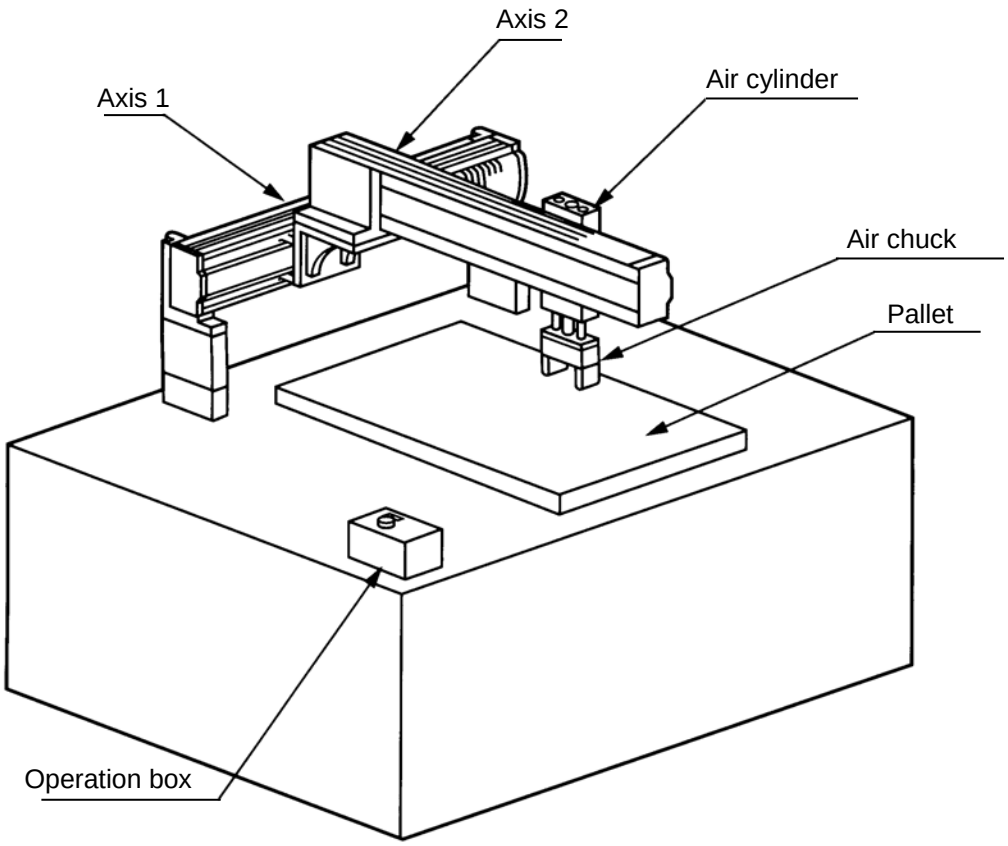

(2) Explanation of the operation

1. Move to the standby point and wait for a start input.
2. Move to the load feed point after a start input is received.
3. The Z-axis comes down and the air chuck clamps the load.
4. The Z-axis rises and moves to above the pallet.
5. The Z-axis comes down and releases the load.
6. The Z-axis rises and moves to above the load feed point.
7. When the pallet becomes full, a pallet-completion indicator signal is output. The axes move to P18 and then wait for restart.

The above operation will be repeated. The operation position, external I/O assignments and operation flow chart of this operation are shown below:

Operation Position

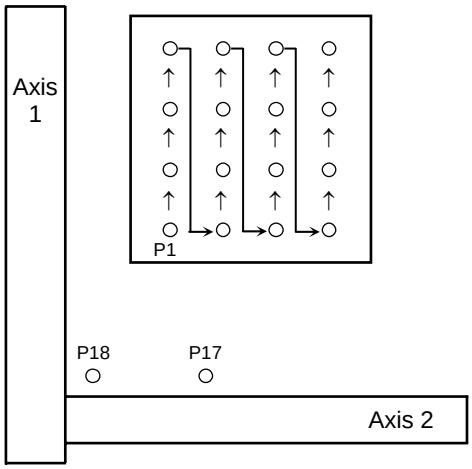

Operation Flow Chart

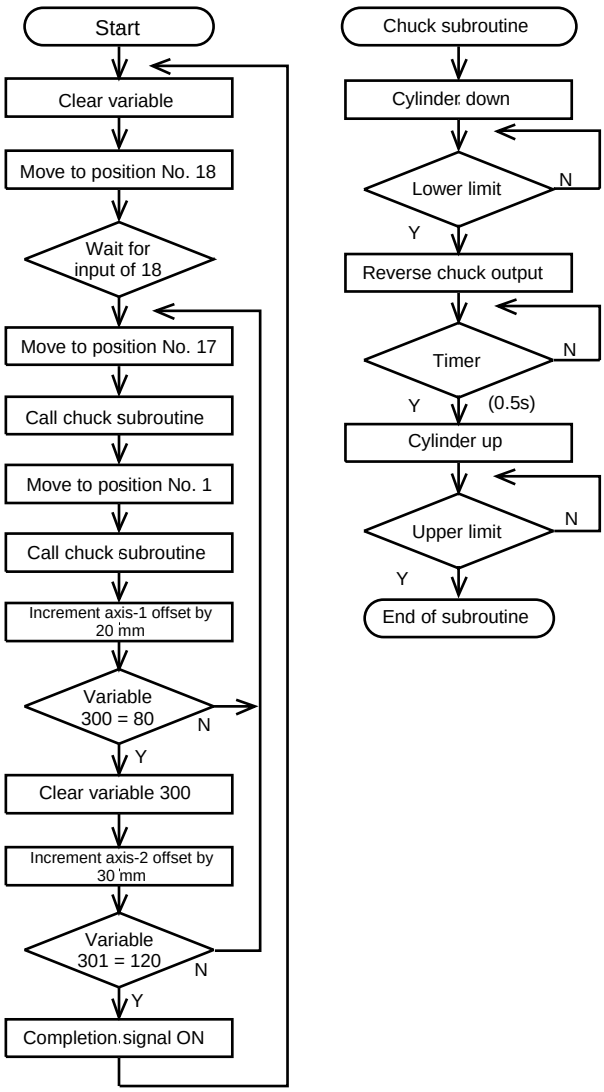

I/O Assignments

Category		I/O No.	Signal name	Specification
X-SEL	Input	16	Z-axis cylinder upper limit	Proximity SW
		17	Z-axis cylinder lower limit	Proximity SW
		18	Start	Pushbutton switch
	Output	309	Z-axis cylinder SV	24 VDC
		310	Z-axis chuck SV	24 VDC
		311	Pallet-completion indicator	24 VDC
	* Flag is used from 600.			

Pallet specifications
Axis-1 direction: 20-mm pitch
Axis-2 direction: 30-mm pitch

(3) X-SEL Controller application program

Step	E	N	Cnd	Cmnd	Operand 1	Operand 2	Pst	Comment
1				HOME	11			Axes 1 and 2 return to home.
2				VEL	100			Set speed to 100 mm/s.
3				ACC	0.2			Acceleration/deceleration: 0.2 G
4				TAG	1			
5				LET	300	0		Clear variable.
6				LET	301	0		Clear variable.
7				OFST	11	0		Clear offset value.
8				MOVL	18			Move to position No. 18.
9				WTON	18			Wait for start input.
10				BTOF	311			Output 311 turns OFF.
11				TAG	2			
12				OFST	11	0		Clear offset value.
13				MOVL	17			Move to position No. 17.
14				EXSR	1			Call chuck subroutine (chuck).
15				OFST	1	*300		Offset axis 1 by value in variable 300.
16				OFST	10	*301		Offset axis 2 by value in variable 301.
17				MOVL	1			Move to position No. 1 + offset value.
18				EXSR	1			Call chuck subroutine (unchuck).
19				ADD	300	20		Add 20 to variable 300.
20				CPEQ	300	80	600	Turn ON flag 600 if variable 300 = 80.
21		N	600	GOTO	2			Jump to TAG2 if flag 600 is OFF.
22				LET	300	0		Clear variable 300.
23				ADD	301	30		Add 30 to variable 301.
24				CPEQ	301	120	601	Turn ON flag 601 if variable 301 = 120.
25		N	601	GOTO	2			Jump to TAG2 if flag 601 is OFF.
26				BTON	311			Output 311 turns ON.
27				GOTO	1			Jump to TAG1.
28				BGSR	1			Start chuck subroutine.
29				BTON	309			Z-axis cylinder down
30				WTON	17			Wait for lower-limit input.
31				BTNT	310			Reverse air-chuck output.
32				TIMW	0.5			Timer: 0.5 second
33				BTOF	309			Z-axis cylinder up
34				WTON	16			Wait for upper-limit input.
35				EDSR				End of chuck subroutine
36								
37								
38								
39								

Part 5 Multi-Tasking

Chapter 1 Real-Time Multi-Tasking

1. SEL Language

The X-SEL Controller allows integrated control of actuators and peripherals with a single controller using its 32-bit RISC CPU and high-speed real-time operating system. There is no need to learn various languages for different units, such as robot language for robots and sequencer language for peripherals. Since SEL language is the only language used, an efficient system can be designed. The current version of SEL language represents a pioneering evolution of the widely proven programming language, evidenced by higher-performance features and advanced functions. The latest version is also easier to use compared with the conventional SEL language.

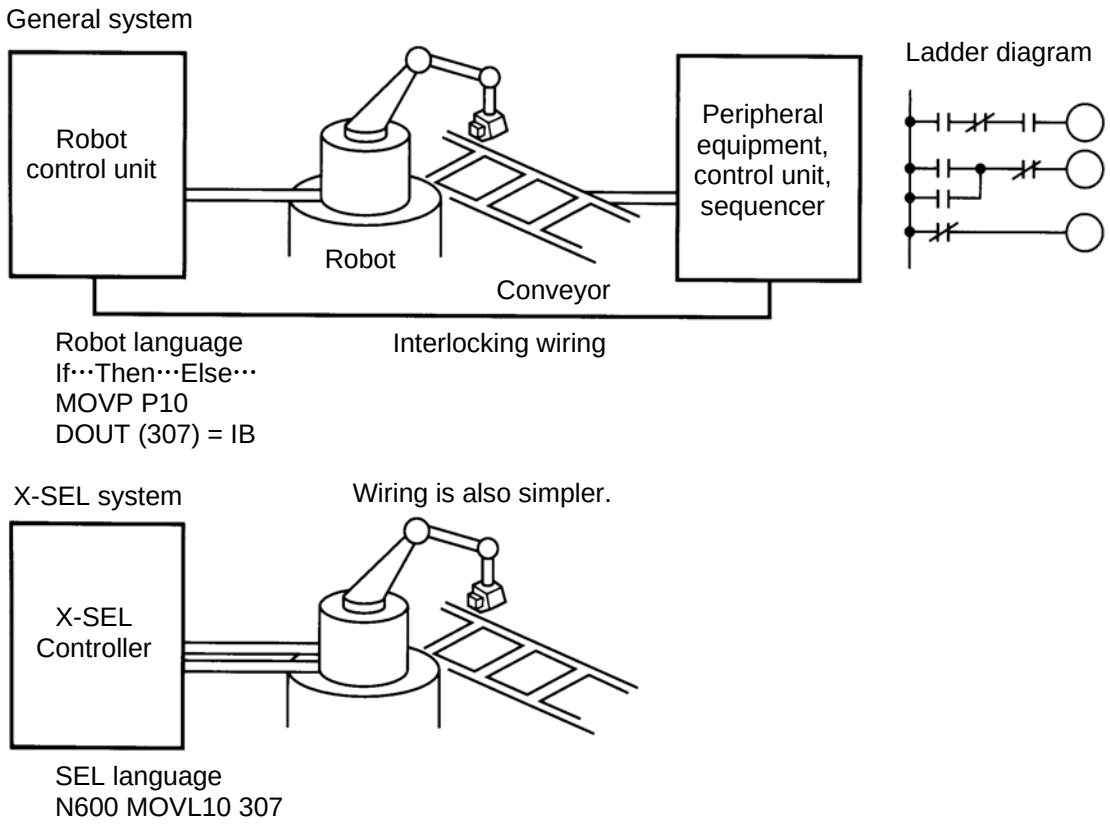

2. Multi-Tasking

"Multi-tasking" operation may not be a familiar term, but it is widely used in computer programming to refer to parallel processing. Simply put, multi-tasking means running several programs in parallel.
Take a screw-tightening robot, for example.
In general, a screw-tightening robot consists of axis-1 and axis-2 actuators and a screw-tightening machine (up/down air cylinder, etc.).

Operation Flow

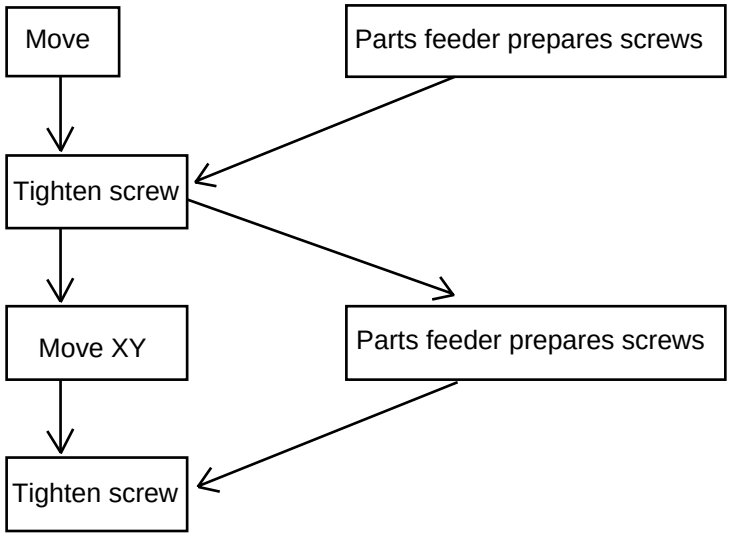

Although the flow chart is simple, the movement of axis-1 and axis 2 actuators and the operation of the parts feeder must take place simultaneously. This requires "multi-tasking" operation.

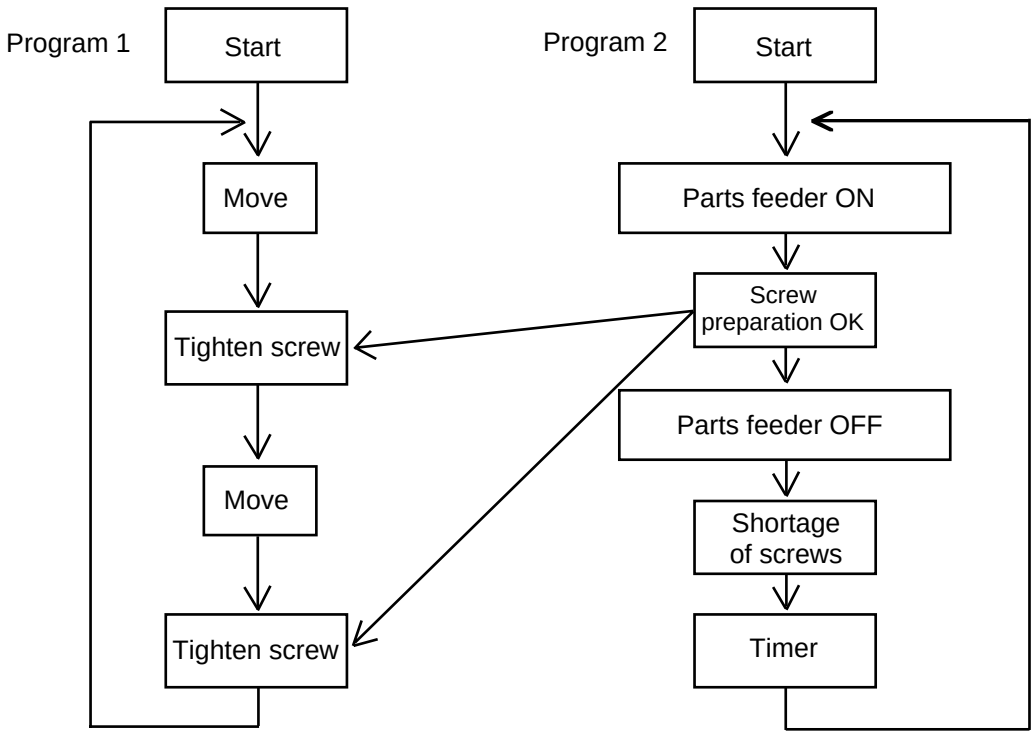

3. Difference from a Sequencer

The parallel processing method has evolved from the traditional method of using a sequence control circuit consisting of relays to a more recent one using a sequencer equipped with a microcomputer. Since a microcomputer basically allows one process for each clock, a sequence control circuit with a microcomputer must scan the entire program to achieve apparent parallel processing. For this reason, a scan time is required, which adds to overhead (dead time).

The microcomputer scans the enter program and outputs only where the condition is satisfied.

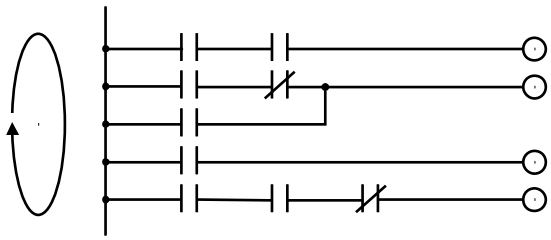

On the other hand, a system consisting of a microcomputer and a real-time operating system no longer uses parallel processing scan (by always scanning the entire program), but adopts an event-driven method instead (whereby the system operates only when an event occurs, such as upon receipt of an input signal). Since no extra scan is necessary, the system can operate at high speed. In addition, each program to be processed in parallel is programmed in steps, so the program is easy to understand and maintain.

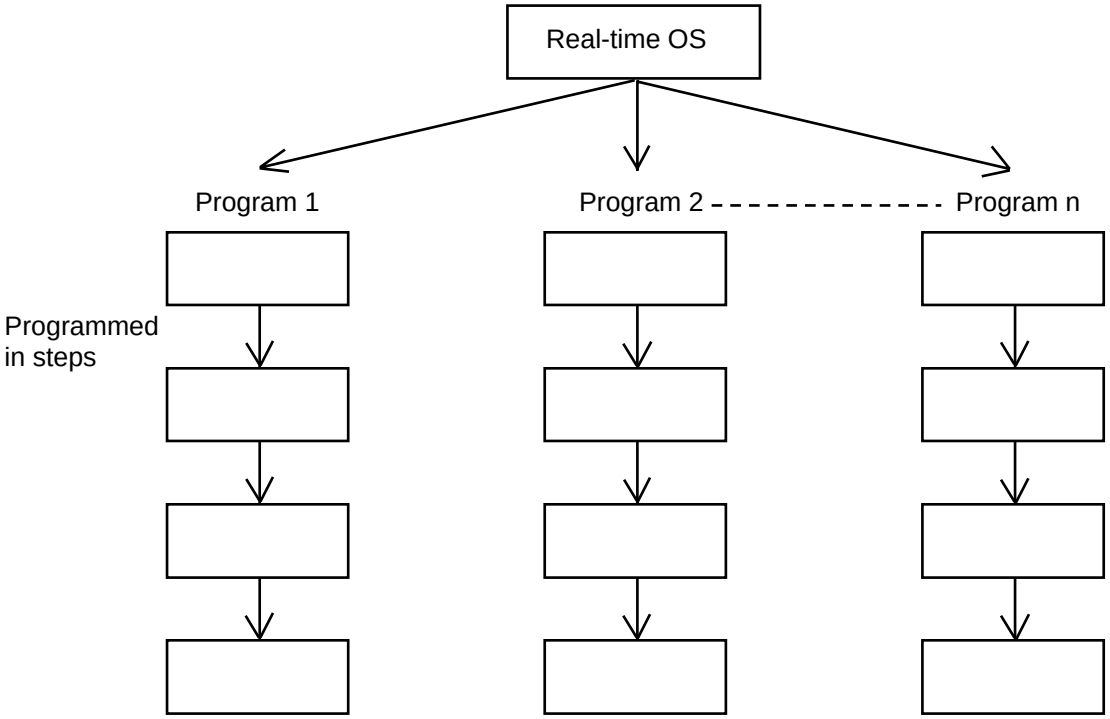

The programmer need not worry about running all programs in parallel, which is controlled by the real-time operating system.

4. Release of Emergency Stop

Default factory settings of parameters
(
“Other parameter No. 10, Emergency-stop recovery type” = 0
“Other parameter No. 11, Safety-gate open recovery type” = 0
“Other parameter No. 12, Recognition type during automatic operation” = 0
)
An emergency stop is actuated by turning the emergency-stop contact b input to OFF, and released by turning the input to ON.

(1) Flow chart

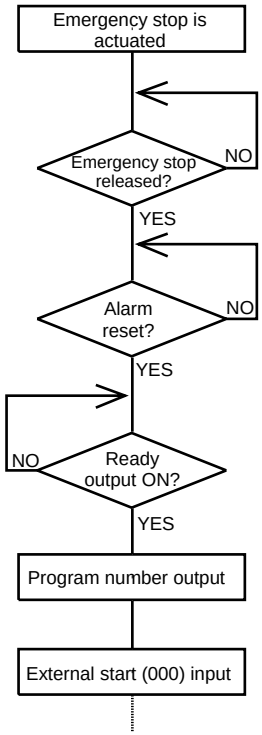

The selected program is executed from step 1.

(2) Timing chart

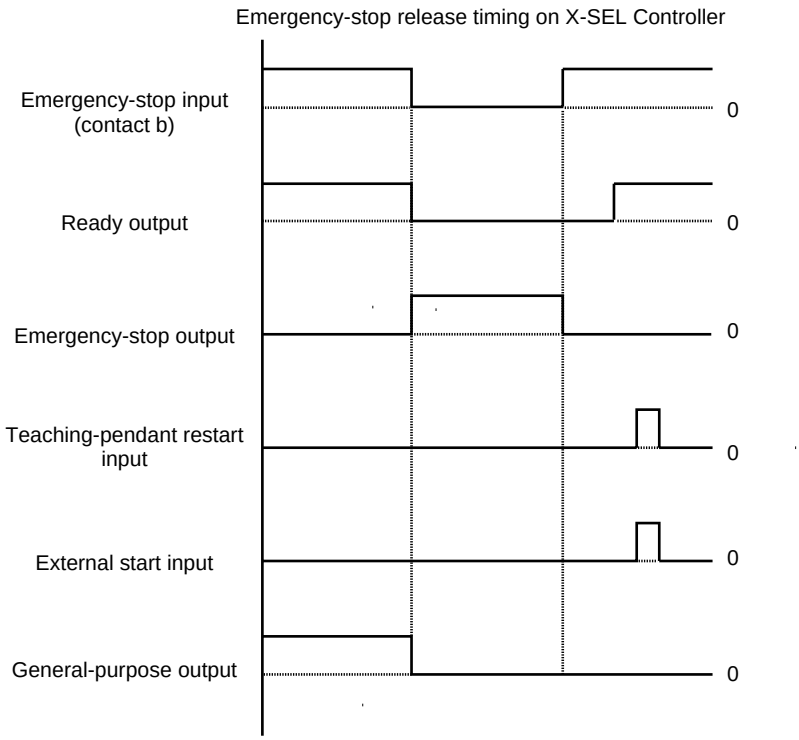

◎ The internal conditions of the controller during an emergency stop are as follows:

- Programs ..... Aborted (excluding “I/O processing programs operation when program is aborted”)
- Output ports, local flags, local variables ..... Cleared
- Global flags, global variables ..... Retained

If the peripherals are to be controlled by program, create a management program beforehand and use the program to control the peripherals. Alternatively, start (EXPG) or abort (ABPG) other programs in accordance with the status of each general-purpose input.

5. Program Switching

Various methods are available to switch between programs, depending on the purpose of programs. The representative methods are explained below.

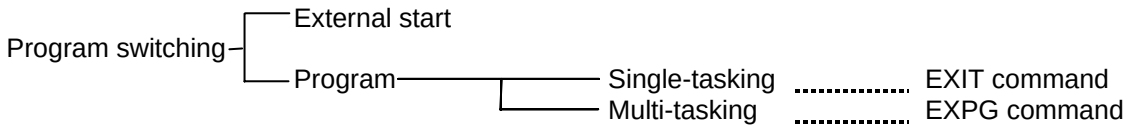

First, the program switching methods are largely divided into switching by external start and switching by application program.

(1) External start method ..... Refer to Chapter 1, “Operation” (Starting via External Signal Selection) in Part 2, “Operation.”

(2) Program method

○ Single-tasking

Executing an EXIT command (end program) at the end of each program will end the program and cause the system to return to the condition immediately after the power is turned on. However, since the home position is retained, another program can be started by an external start input with the corresponding program number specified.

○ Multi-tasking

Creating a management program and executing EXPG commands (start other program) will allow a series of programs to be run in parallel.

Chapter 2 Example of Building a System

How to build hardware and software is explained in details by using a screw-tightening robot as an example.

1. Equipment

Screw-tightening machine (for Z-axis)	
Actuators (for axes 1 and 2)	IAI's 60-W servo motor with 300-mm stroke x 2
Controller	IAI's X-SEL Controller

2. Operation

(1) Tighten six screws at 30-mm pitches on axes 1 and 2.
1. The actuators move to a screw-tightening position.
2. The Z-axis air cylinder of the screw-tightening machine comes down.
3. The screw-tightening machine starts operating.
4. When the screw tightening is complete, the Z-axis air cylinder rises.
5. The actuators move to the next position.

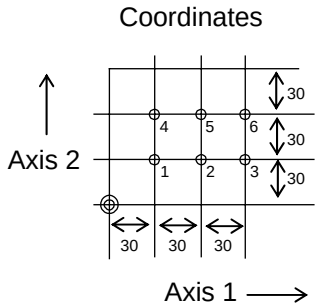

(2) The parts feeder operates in parallel with the above operation.
1. The parts feeder starts when screws are short.
2. The parts feeder stops when the screws are fully loaded.

3. Overview of the Screw-Tightening System

This system consists of axis-1 and axis-2 actuators, Z-axis cylinder, screw-tightening device and parts feeder, and tightens the screws fed by the parts feeder at the specified positions on the load.

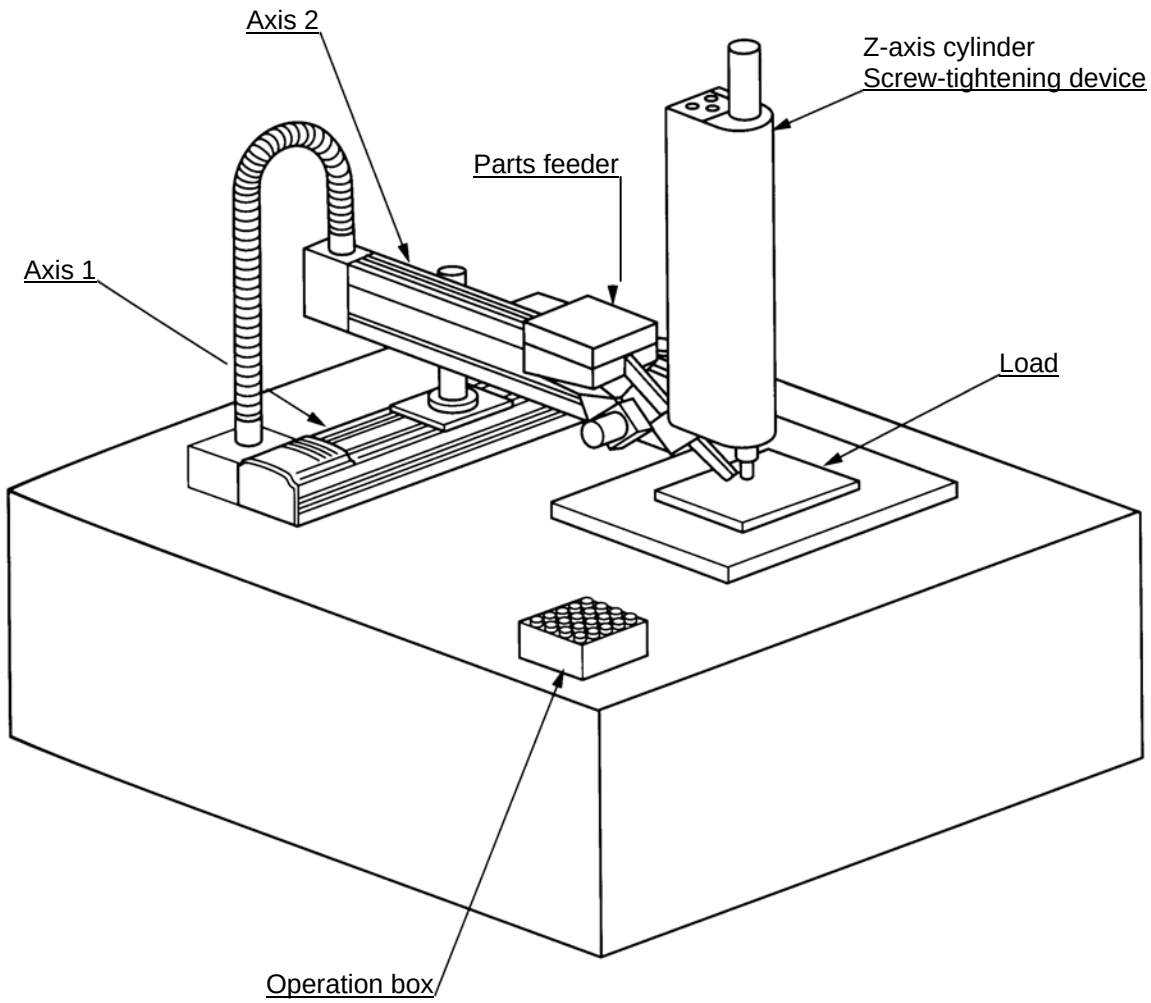

4. Hardware

(1) I/O assignments I/O connector (50-pin)

Pin No.	Category	Port No.	Function	Cable color
1	Input	-	General-purpose: NC, Compact: +24-V input	Brown – 1
2		000	Program start	Red – 1
3		001	General-purpose input	Orange – 1
4		002	General-purpose input	Yellow – 1
5		003	General-purpose input	Green – 1
6		004	General-purpose input	Blue – 1
7		005	General-purpose input	Purple – 1
8		006	General-purpose input	Gray – 1
9		007	Program specification (PRG No. 1)	White – 1
10		008	Program specification (PRG No. 2)	Black – 1
11		009	Program specification (PRG No. 4)	Brown – 2
12		010	Program specification (PRG No. 8)	Red – 2
13		011	Program specification (PRG No. 10)	Orange – 2
14		012	Program specification (PRG No. 20)	Yellow – 2
15		013	Program specification (PRG No. 40)	Green – 2
16		014	General-purpose input	Blue – 2
17		015	General-purpose input	Purple – 2
18		016	Screw tightening start	Gray – 2
19		017	Screw tightening end	White – 2
20		018	Z-axis air-cylinder upper limit	Black – 2
21		019	Parts-feeder screws full	Brown – 3
22		020	Screw tightening complete	Red – 3
23		021	General-purpose input	Orange – 3
24		022	General-purpose input	Yellow – 3
25		023	General-purpose input	Green – 3
26		024	General-purpose input	Blue – 3
27		025	General-purpose input	Purple – 3
28		026	General-purpose input	Gray – 3
29		027	General-purpose input	White – 3
30		028	General-purpose input	Black – 3
31		029	General-purpose input	Brown – 4
32		030	General-purpose input	Red – 4
33		031	General-purpose input	Orange – 4
34	Output	300	Alarm output	Yellow – 4
35		301	Ready output	Green – 4
36		302	Emergency-stop output	Blue – 4
37		303	General-purpose output	Purple – 4
38		304	General-purpose output	Gray – 4
39		305	General-purpose output	White – 4
40		306	General-purpose output	Black – 4
41		307	General-purpose output	Brown – 5
42		308	General-purpose output	Red – 5
43		309	Z-axis air cylinder down	Orange – 5
44		310	Screw tightening start	Yellow – 5
45		311	Parts feeder start	Green – 5
46		312	General-purpose output	Blue – 5
47		313	General-purpose output	Purple – 5
48		314	General-purpose output	Gray – 5
49		315	General-purpose output	White – 5
50		-	General-purpose: NC, Compact: 0 V	Black – 5

(2) Layout diagram

Pin No.	Category	Port No.	Function
1		-	General-purpose: NC, Compact: +24-V input
2		000	Program start
3		001	General-purpose input
4		002	General-purpose input
5		003	General-purpose input
6		004	General-purpose input
7		005	General-purpose input
8		006	General-purpose input
9		007	Program specification (PRG No. 1)
10		008	Program specification (PRG No. 2)
11		009	Program specification (PRG No. 4)
12		010	Program specification (PRG No. 8)
13		011	Program specification (PRG No. 10)
14		012	Program specification (PRG No. 20)
15		013	Program specification (PRG No. 40)
16		014	General-purpose input
17	Input	015	General-purpose input
18		016	Screw tightening start
19		017	Screw tightening end
20		018	Z-axis air-cylinder upper limit
21		019	Parts-feeder screws full
22		020	Screw tightening complete
23		021	General-purpose input
24		022	General-purpose input
25		023	General-purpose input
26		024	General-purpose input
27		025	General-purpose input
28		026	General-purpose input
29		027	General-purpose input
30		028	General-purpose input
31		029	General-purpose input
32		030	General-purpose input
33		031	General-purpose input
34		300	Alarm output
35		301	Ready output
36		302	Emergency-stop output
37		303	General-purpose output
38		304	General-purpose output
39		305	General-purpose output
40		306	General-purpose output
41		307	General-purpose output
42	Output	308	General-purpose output
43		309	Z-axis air cylinder down
44		310	Screw tightening start
45		311	Parts feeder start
46		312	General-purpose output
47		313	General-purpose output
48		314	General-purpose output
49		315	General-purpose output
50		-	General-purpose: NC, Compact: 0 V

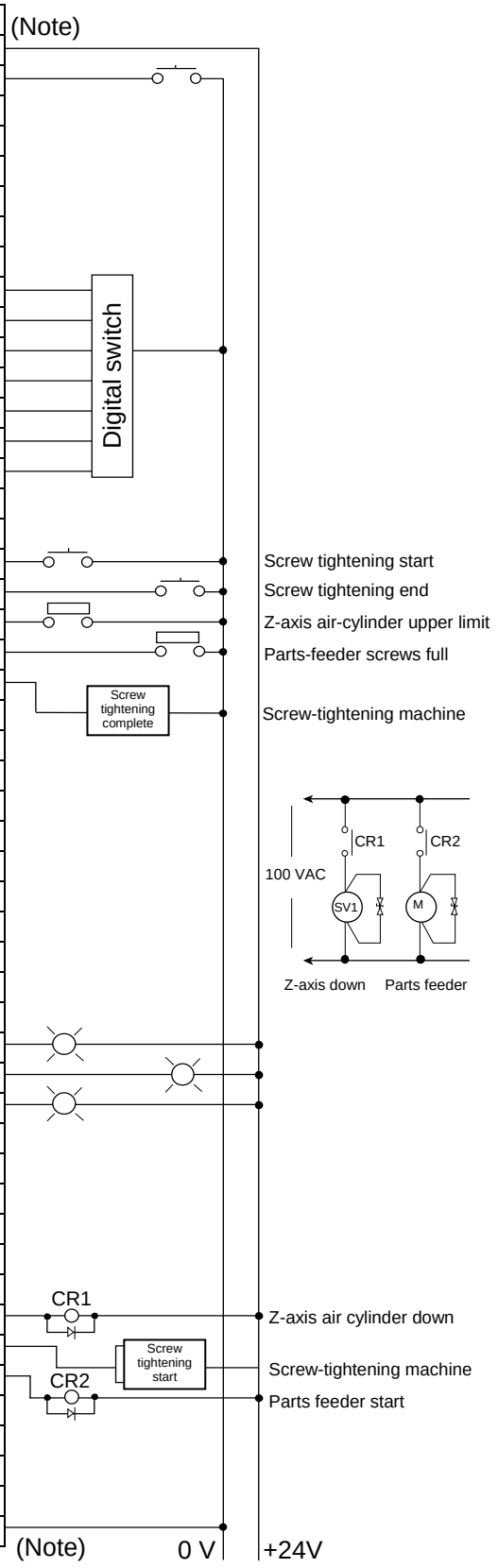

Pin Nos. 1 and 50 are not connected on a general-purpose type.
Pin No. 1 is connected to +24 V and No. 50 to 0 V on a compact type.

5. Software

(1) Control flow chart

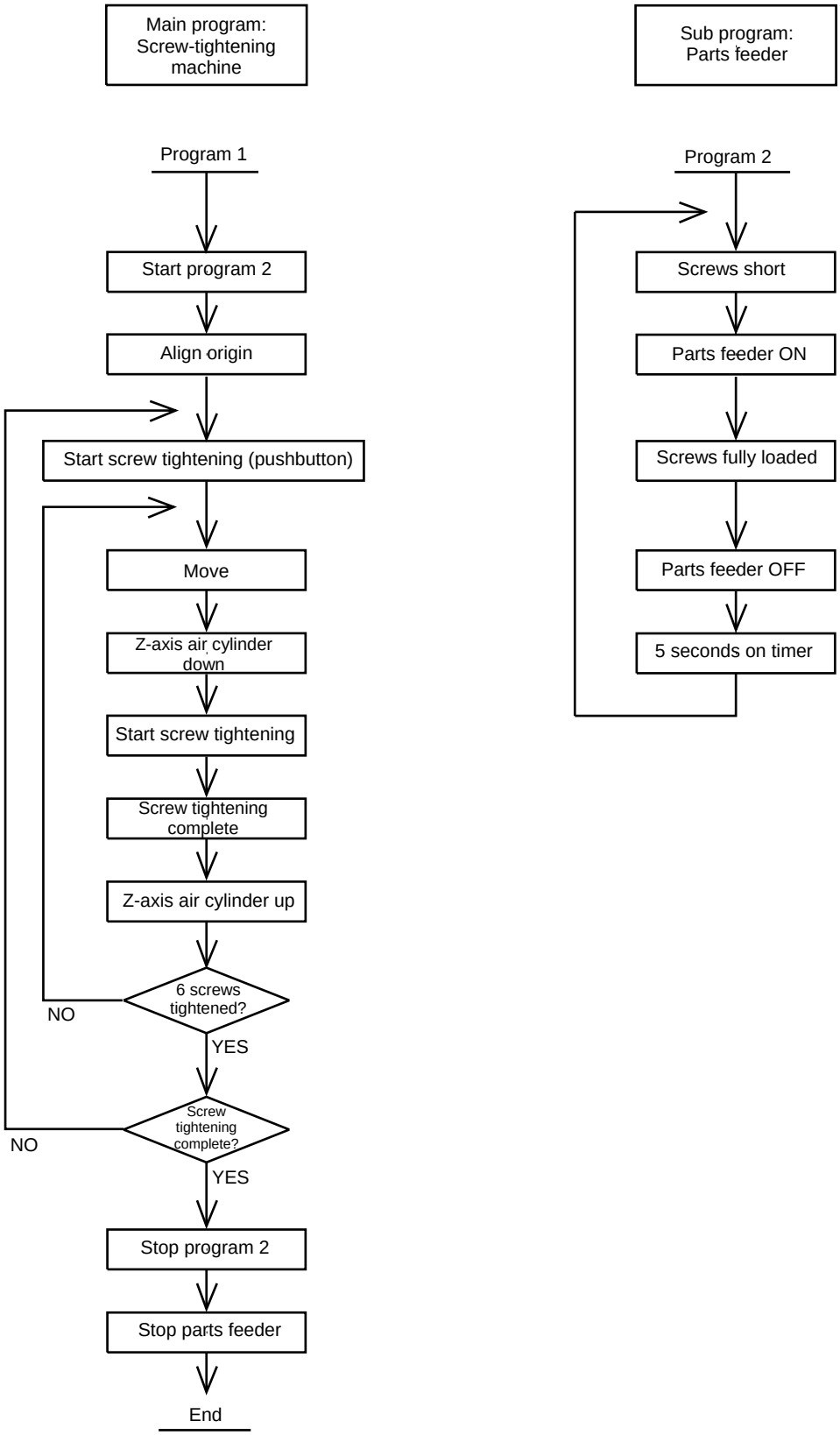

(2) Main program

Screw-tightening program No. 1

Application program

Comment	Extension condition	Input condition	Command			Output condition	Comment
	AND, OR	I/O, flag	Command	Operand 1	Operand 2	Output port, flag	
1			EXPG	2			Start program 2.
2			HOME	11			Align home.
3			VEL	100			Speed: 100 mm/sec
4			ACC	0.3			Acceleration: 0.3 G
5			TAG	1			Jump destination at restart
6			WTON	16			Screw-tightening start pushbutton
7			LET	1	1		Set screw counter.
8			TAG	2			Jump destination after tightening one screw
9			MOVL	*1			Move.
10			BTON	309			Z-axis air cylinder down
11			BTON	310			Start screw tightening.
12			WTON	20			Screw tightening complete.
13			BTOF	309	310		Cylinder up, screw tightening stopped.
14			WTON	18			Check Z-axis air cylinder top position.
15			ADD	1	1		Increment screw counter by 1.
16			CPEQ	1	7	900	Compare after tightening six screws.
17		N900	GOTO	2			Go to next screw-tightening cycle after tightening one screw.
18		N17	GOTO	1			Restart screw tightening.
19			ABPG	2			Stop program 2.
20			BTOF	311			Stop parts feeder.
21			EXIT				End of program 1

Position program

No.	X	Y
1	30	30
2	60	30
3	90	30
4	30	60
5	60	60
6	90	60

(3) Sub program

Parts feeder program No. 2

Application program

Comment	Extension condition	Input condition	Command			Output condition	Comment
	AND, OR	I/O, flag	Command	Operand 1	Operand 2	Output port, flag	
1			TAG	1			Jump destination for repeating
2			WTOF	19			Screws short.
3			BTON	311			Start parts feeder.
4			WTON	19			Screws fully loaded.
5			BTOF	311			Stop parts feeder.
6			TIMW	5			5 seconds on restart timer
7			GOTO	1			Repeat.

Appendix

⊙ Actuator Specification List

	Model	Stroke (mm) and maximum speed (mm/sec) (Note 1)	Load capacity (Note 2) Horizontal (kg)	Load capacity (Note 2) Vertical (kg)	Rated acceleration Horizontal (G)	Rated acceleration Vertical (G)
RCS2 (Slider type)	RCS2-SA4C-□-20-10-□□□	665	4	1	0.3	0.3
	RCS2-SA4C-□-20-5-□□□	330	6	2.5	0.3	0.3
	RCS2-SA4C-□-20-2.5-□□□	165	8	4.5	0.2	0.2
	RCS2-SA5C-□-20-12-□□□	800 / 760	4	1	0.3	0.3
	RCS2-SA5C-□-20-6-□□□	400 / 480	8	2	0.3	0.3
	RCS2-SA5C-□-20-3-□□□	200 / 150	12	4	0.2	0.2
	RCS2-SA6C-□-30-12-□□□	800 / 760 / 640 / 540	6	1.5	0.3	0.3
	RCS2-SA6C-□-30-6-□□□	400 / 380 / 320 / 270	12	3	0.3	0.3
	RCS2-SA6C-□-30-3-□□□	200 / 190 / 160 / 135	18	6	0.2	0.2
	RCS2-SA7C-□-60-16-□□□	800 / 640 / 480	12	3	0.3	0.3
	RCS2-SA7C-□-60-8-□□□	400 / 320 / 240	25	6	0.3	0.3
	RCS2-SA7C-□-60-4-□□□	200 / 160 / 120	40	12	0.2	0.2
	RCS2-SS7C-□-60-12-□□□	600 / 470	15	4	0.3	0.3
	RCS2-SS7C-□-60-6-□□□	300 / 230	30	8	0.3	0.3
	RCS2-SS8C-□-100-20-□□□	1000 / 980 / 765 / 825 / 515	20	4	0.3	0.3
	RCS2-SS8C-□-100-10-□□□	500 / 480 / 388 / 330 / 255	40	8	0.3	0.3
	RCS2-SS8C-□-150-20-□□□	1000 / 960 / 768 / 625 / 515	30	6	0.3	0.3
	RCS2-SS8C-□-150-10-□□□	500 / 480 / 388 / 330 / 255	60	12	0.3	0.3
RCS2 (Rod type)	RCS2-RA4C-□-20-12-□□□	600	3	1	0.3	0.3
	RCS2-RA4C-□-20-6-□□□	300	6	2	0.3	0.3
	RCS2-RA4C-□-20-3-□□□	150	12	4	0.2	0.2
	RCS2-RA4C-□-30-12-□□□	600	4	1.5	0.3	0.3
	RCS2-RA4C-□-30-6-□□□	300	9	3	0.3	0.3
	RCS2-RA4C-□-30-3-□□□	150	18	6.5	0.2	0.2
	RCS2-RA5C-□-60-16-□□□	800 / 755	12	2	0.3	0.3
	RCS2-RA5C-□-60-8-□□□	400 / 377	25	5	0.3	0.3
	RCS2-RA5C-□-60-4-□□□	200 / 188	50	11.5	0.2	0.2
	RCS2-RA5C-□-100-16-□□□	800 / 755	15	3.5	0.3	0.3
	RCS2-RA5C-□-100-8-□□□	400 / 377	30	9	0.3	0.3
	RCS2-RA5C-□-100-4-□□□	200 / 188	60	18	0.2	0.2
	RCS2-RA7AD-I-60-12-□□□	600 / 505	10	2.5	0.15	0.15
	RCS2-RA7AD-I-60-6-□□□	300 / 250	20	7	0.1	0.1
	RCS2-RA7AD-I-60-3-□□□	150 / 125	40	15	0.05	0.05
	RCS2-RA7AD-I-100-12-□□□	600 / 505	15	5.5	0.2	0.2
	RCS2-RA7AD-I-100-6-□□□	300 / 250	30	12.5	0.1	0.1
	RCS2-RA7BD-I-100-16-□□□	800	10	3.5	0.25	0.25
	RCS2-RA7BD-I-100-8-□□□	400	22	9	0.17	0.17
	RCS2-RA7BD-I-100-4-□□□	200	40	19.5	0.1	0.1
	RCS2-RA7BD-I-150-16-□□□	800	15	6.5	0.3	0.3
	RCS2-RA7BD-I-150-8-□□□	400	35	14.5	0.2	0.2
RCS2 (Arm/flat type)	RCS2-A4R-□-20-10-□□□	330	–	2.5	–	0.2
	RCS2-A4R-□-20-5-□□□	165	–	4.5	–	0.2
	RCS2-A5R-□-30-12-□□□	400	–	2	–	0.2
	RCS2-A5R-□-30-6-□□□	200	–	4	–	0.2
	RCS2-A6R-□-30-12-□□□	400	–	3	–	0.2
	RCS2-A6R-□-30-6-□□□	200	–	6	–	0.2
	RCS2-F5D-□-60-16-□□□	800	–	2	–	0.3
	RCS2-F5D-□-60-8-□□□	400	–	5	–	0.3
	RCS2-F5D-□-60-4-□□□	200	–	11.5	–	0.2
	RCS2-F5D-□-100-16-□□□	800	–	3.5	–	0.3
	RCS2-F5D-□-100-8-□□□	400	–	9	–	0.3
	RCS2-F5D-□-100-4-□□□	200	–	18	–	0.2

(Note 1) The figure in each elongated circle indicates the maximum speed for the applicable stroke(s).
(Note 2) The load capacity is based on operation at the rated acceleration.
(Note 3) RCS2-R**7 series actuators cannot be used as axis 5 or 6.

	Model	Stroke (mm) and maximum speed (mm/sec) (Note 1)	Load capacity (Note 2)		Rated acceleration	
			Horizontal	Vertical	Horizontal	Vertical
		50 100 150 200 250 300 350 400 450 500 550 600 700 800 900 1000 1100 1200	(kg)	(kg)	(G)	(G)
RCS2 (Rotary type)	RCS2-RT6-I-60-18-300	500	–	–	–	–
	RCS2-RT6R-I-60-18-300	500	–	–	–	–
	RCS2-RT7R-I-60-4-300	500	–	–	–	–
RCS2CR (Slider type)	RCS2CR-SA4C-□-20-10-□□□	665	4	1	0.3	0.3
	RCS2CR-SA4C-□-20-5-□□□	330	6	2.5	0.3	0.3
	RCS2CR-SA4C-□-20-2.5-□□□	165	8	4.5	0.2	0.2
	RCS2CR-SA5C-□-20-12-□□□	800 760	4	1	0.3	0.3
	RCS2CR-SA5C-□-20-6-□□□	400 380	8	2	0.3	0.3
	RCS2CR-SA5C-□-20-3-□□□	200 190	12	4	0.2	0.2
	RCS2CR-SA6C-□-30-12-□□□	800 760 640 540	6	1.5	0.3	0.3
	RCS2CR-SA6C-□-30-6-□□□	400 380 320 270	12	3	0.3	0.3
	RCS2CR-SA6C-□-30-3-□□□	200 190 160 135	18	6	0.2	0.2
	RCS2CR-SA7C-□-60-16-□□□	600 640 480	12	3	0.3	0.3
	RCS2CR-SA7C-□-60-8-□□□	400 320 240	25	6	0.3	0.3
	RCS2CR-SA7C-□-60-4-□□□	200 160 120	40	12	0.2	0.2
	RCS2CR-SS7C-□-60-12-□□□	600 470	15	4	0.3	0.3
	RCS2CR-SS7C-□-60-6-□□□	300 230	30	8	0.3	0.3
	RCS2CR-SS8C-□-100-20-□□□	1000 800 765 625 515	20	4	0.3	0.3
	RCS2CR-SS8C-□-100-10-□□□	500 480 380 310 255	40	8	0.3	0.3
	RCS2CR-SS8C-□-150-20-□□□	1000 800 765 625 515	30	6	0.3	0.3
	RCS2CR-SS8C-□-150-10-□□□	500 480 380 310 255	60	12	0.3	0.3
RCS2W (Dustproof/splash-proof type)	RCS2W-RA4□-□-30-12-□□□	600	4	1.5	0.3	0.3
	RCS2W-RA4□-□-30-6-□□□	300	9	3	0.3	0.3
	RCS2W-RA4□-□-30-3-□□□	150	18	6.5	0.2	0.2

(Note 1) The figure in each elongated circle indicates the maximum speed for the applicable stroke(s).
(Note 2) The load capacity is based on operation at the rated acceleration.

	Model	Stroke (mm) and maximum speed (mm/sec) (Note 1)	Load capacity (Note 2)		Rated acceleration	
		50 100 150 200 250 300 350 400 450 500 550 600 700 800 900 1000	Horizontal (kg)	Vertical (kg)	Horizontal (G)	Vertical (G)
RCS (Slider type)	RCS-SS-□-60-H-□□□	600 470	15	4	0.3	0.2
	RCS-SS-□-60-M-□□□	300 230	30	8		
	RCS-SM-□-100-H-□□□	1000 960 765 625 515	20	4		
	RCS-SM-□-100-M-□□□	500 480 380 310 255	40	8		
	RCS-SM-□-150-H-□□□	1000 960 765 625 515	30	6		
	RCS-SM-□-150-M-□□□	500 480 380 310 255	60	12		
	RCS-SSR-□-60-H-□□□	600 470	15	4		
	RCS-SSR-□-60-M-□□□	300 230	30	8		
	RCS-SMR-□-100-H-□□□	1000 960 765 625 515	20	4		
	RCS-SMR-□-100-M-□□□	500 480 380 310 255	40	8		
	RCS-SMR-□-150-H-□□□	1000 960 765 625 515	30	6		
	RCS-SMR-□-150-M-□□□	500 480 380 310 255	60	12		
RCS (Rod type)	RCS-RA55-□-60-H-□□□	800 755	12	2	0.3	0.2
	RCS-RA55-□-60-M-□□□	400 377	25	5		
	RCS-RA55-□-60-L-□□□	200 188	50	11.5	0.2	
	RCS-RA55-□-100-H-□□□	800 755	15	3.5	0.3	
	RCS-RA55-□-100-M-□□□	400 377	30	9		
	RCS-RA55-□-100-L-□□□	200 188	60	18	0.2	
	RCS-RA55R-□-60-H-□□□	800 755	12	2	0.3	
	RCS-RA55R-□-60-M-□□□	400 377	25	5		
	RCS-RA55R-□-60-L-□□□	200 188	50	11.5	0.2	
	RCS-RB7530-I-60-H-□□□	600 505	10	2.5	0.15	0.15
	RCS-RB7530-I-60-M-□□□	300 250	20	7	0.1	0.1
	RCS-RB7530-I-60-L-□□□	150 125	40	15.5	0.05	0.05
	RCS-RB7530-I-100-H-□□□	600 505	15	5.5	0.2	0.2
	RCS-RB7530-I-100-M-□□□	300 250	30	12.5	0.1	0.1
	RCS-RB7535-I-100-H-□□□	800	10	3.5	0.25	0.25
	RCS-RB7535-I-100-M-□□□	400	22	9	0.17	0.17
	RCS-RB7535-I-100-L-□□□	200	40	19.5	0.1	0.1
	RCS-RB7535-I-150-H-□□□	800	15	6.5	0.3	0.3
	RCS-RB7535-I-150-M-□□□	400	35	14.5	0.2	0.2
RCS (Flat type)	RCS-F55-□-60-H-□□□	800	–	2	0.3	0.2
	RCS-F55-□-60-M-□□□	400		5		
	RCS-F55-□-60-L-□□□	200		11.5	0.2	
	RCS-F55-□-100-H-□□□	800		3.5	0.3	
	RCS-F55-□-100-M-□□□	400		9		
	RCS-F55-□-100-L-□□□	200		18	0.2	

(Note 1) The figure in each elongated circle indicates the maximum speed for the applicable stroke(s).
(Note 2) The load capacity is based on operation at the rated acceleration.
(Note 3) RCS-RB75 series actuators cannot be used as axis 5 or 6.

	Model	Stroke (mm) and maximum speed (mm/sec) (Note 1)	Load capacity (Note 2)		Rated acceleration	
			Horizontal	Vertical	Horizontal	Vertical
		50 100 150 200 250 300 350 400 450 500 550 600 700 800 900 1000	(kg)	(kg)	(G)	(G)
DS	DS-SA4-□-20-10-□□□	665	4	1	0.3	0.3
	DS-SA4-□-20-5-□□□	330	5	2.5		
	DS-SA4-□-20-2.5-□□□	165	5	4.5	0.2	0.2
	DS-SA5-□-20-12-□□□	800 760	4	1	0.3	0.3
	DS-SA5-□-20-6-□□□	400 380	8	2		
	DS-SA5-□-20-3-□□□	200 190	8	4	0.2	0.2
	DS-SA6-□-30-12-□□□	800 760 640 540	6	1.5	0.3	0.3
	DS-SA6-□-30-6-□□□	400 380 320 270	12	3		
	DS-SA6-□-30-3-□□□	200 190 160 135	12	6	0.2	0.2
	DS-A4-□-20-10-□□□	330	–	2.5	–	0.2
	DS-A4-□-20-5-□□□	165	–	4.5		
	DS-A5-□-20-12-□□□	400	–	2		
	DS-A5-□-20-6-□□□	200	–	4		
	DS-A6-□-30-12-□□□	400	–	3		
	DS-A6-□-30-6-□□□	200	–	6		
		100 200 300 400 500 600 700 800 900 1000 1100 1200 1300 1400 1500 2000				
SS	SS-S-□-60-12-□□□	600 470	15	4	0.3	0.3
	SS-S-□-60-6-□□□	300 230	30	8		
	SS-M-□-100-20-□□□	1000 960 765 625 515	20	4		
	SS-M-□-100-10-□□□	500 480 380 310 255	40	8		
	SS-M-□-150-20-□□□	1000 960 765 625 515	30	6		
	SS-M-□-150-10-□□□	500 480 380 310 255	60	12		
ISA ISPA	ISA(ISPA)-SXM-□-60-16-□□□	800	12	3	0.3	0.3
	ISA(ISPA)-SXM-□-60-8-□□□	400	25	6		
	ISA(ISPA)-SXM-□-60-4-□□□	200	50	14	0.15	0.15
	ISA(ISPA)-SYM-□-60-16-□□□	800	12	3	0.3	0.3
	ISA(ISPA)-SYM-□-60-8-□□□	400	25	6		
	ISA(ISPA)-SYM-□-60-4-□□□	200	50	14	0.15	0.15
	ISA(ISPA)-SZM-□-60-8-□□□	400	–	6	–	0.3
	ISA(ISPA)-SZM-□-60-4-□□□	200	–	14	–	0.15
	ISA(ISPA)-MXM-□-100-20-□□□	1000 1000 795 645 540	20	5	0.3	0.3
	ISA(ISPA)-MXM-□-100-10-□□□	500 480 380 310 255	40	9		
	ISA(ISPA)-MXM-□-100-5-□□□	250 220 175 145 120	80	19	0.15	0.15
	ISA(ISPA)-MXM-□-200-30-□□□	1500 1500 1190 965 810	25	6	0.3	0.3
	ISA(ISPA)-MXM-□-200-20-□□□	1000 1000 795 645 540	40	9		
	ISA(ISPA)-MXM-□-200-10-□□□	500 480 380 310 255	80	19		
	ISA(ISPA)-MXMX-□-200-30-□□□	1500 1425 1200 675	25	–	0.3	–
	ISA(ISPA)-MXMX-□-200-20-□□□	1000 950 800 450	40	–		
	ISA(ISPA)-MYM-□-100-20-□□□	1000 1000 795 645 540	20	5	0.3	0.3
	ISA(ISPA)-MYM-□-100-10-□□□	500 480 380 310 255	40	9		
	ISA(ISPA)-MYM-□-100-5-□□□	250 220 175 145 120	80	19	0.15	0.15
	ISA(ISPA)-MYM-□-200-30-□□□	1500 1500 1190 965 810	25	6	0.3	0.3
	ISA(ISPA)-MYM-□-200-20-□□□	1000 1000 795 645 540	40	9		
	ISA(ISPA)-MYM-□-200-10-□□□	500 480 380 310 255	80	19		
	ISA(ISPA)-MZM-□-100-10-□□□	500 480 380 310 255	–	9		
	ISA(ISPA)-MZM-□-100-5-□□□	250 220 175 145 120	–	19	0.15	0.15
	ISA(ISPA)-MZM-□-200-10-□□□	500 480 380 310 255	–	19	–	0.3

(Note 1) The figure in each elongated circle indicates the maximum speed for the applicable stroke(s).
(Note 2) The load capacity is based on operation at the rated acceleration.

	Model	Stroke (mm) and maximum speed (mm/sec) (Note 1)														Load capacity (Note 2)		Rated acceleration	
		100~500	600	700	800	900	1000	1100	1200	1300	1400	1500	1600	1700~2000	2100~2500	3000	Horizontal (kg)	Vertical (kg)	Horizontal (G)	Vertical (G)
ISA ISPA	ISA(ISPA)-LXM-□-200-40-□□□	1000			1000	830	690	585	500								40	9	0.3	0.3
	ISA(ISPA)-LXM-□-200-20-□□□	500			470	385	320	270	235								80	19		
	ISA(ISPA)-LXM-□-400-40-□□□	2000			2000	1660	1380	1170	1000								40	9		
	ISA(ISPA)-LXM-□-400-20-□□□	1000			1000	830	690	585	500								80	19		
	ISA(ISPA)-LXMX-□-200-20-□□□						1000					950	830	740~540	490~340		40	–	0.3	–
	ISA(ISPA)-LXMX-□-400-40-□□□						2000					1900	1660	1480~1080	980~680		40	–		
	ISA(ISPA)-LXMX-□-400-20-□□□						1000					950	830	740~540	490~340		80	–		
	ISA(ISPA)-LXUWX-□-200-20-□□□						1000					950	830	740~540	490~340		40	–		
	ISA(ISPA)-LXUWX-□-400-40-□□□						2000					1900	1660	1480~1080	980~680		40	–		
	ISA(ISPA)-LXUWX-□-400-20-□□□						1000					950	830	740~540	490~340		80	–		
	ISA(ISPA)-LYM-□-200-20-□□□	1000			1000	830	690	585	500								40	9	0.3	0.3
	ISA(ISPA)-LYM-□-200-10-□□□	500			470	385	320	270	235								80	19		
	ISA(ISPA)-LYM-□-400-40-□□□	2000			2000	1660	1380	1170	1000								40	9		
	ISA(ISPA)-LYM-□-400-20-□□□	1000			1000	830	690	585	500								80	19		
	ISA(ISPA)-LZM-□-200-10-□□□	500			470	385	320	270	235								–	19		
	ISA(ISPA)-LZM-□-400-10-□□□	500			470	385	320	270	235								–	39		
ISP	ISP-WXM-□-600-40-□□□	2000			1670	1390	1170	1000	865								60	14	0.3	0.3
	ISP-WXM-□-600-20-□□□	1000			835	695	585	500	430								120	29		
	ISP-WXM-□-600-10-□□□	500			415	345	290	250	215								150	60		
	ISP-WXM-□-750-40-□□□	2000			1670	1390	1170	1000	865								75	18		
	ISP-WXM-□-750-20-□□□	1000			835	695	585	500	430								150	37	0.3	
	ISP-WXMX-□-600-40-□□□						2000					1965	1725	1530	1365~1005	915~655	60	–		–
	ISP-WXMX-□-600-20-□□□						1000					980	860	765	680~500	455~325	120	–		
	ISP-WXMX-□-750-40-□□□						2000					1965	1725	1530	1365~1005		75	–		
	ISP-WXMX-□-750-20-□□□						1000					980	860	765	680~500		150	–		
ISD	ISD-S-□-60-16-□□□	800	760														12	3	0.3	0.3
	ISD-S-□-60-8-□□□	400	380														25	6		
	ISD-S-□-60-4-□□□	200	190														50	14	0.15	0.15
	ISD-M-□-100-20-□□□	1000		915	735	600	500										20	5	0.3	0.3
	ISD-M-□-100-10-□□□	500		455	365	300	250										40	9		
	ISD-M-□-100-5-□□□	250		225	180	150	125										80	19	0.15	0.15
	ISD-M-□-200-20-□□□	1000		915	735	600	500										40	9	0.3	0.3
	ISD-M-□-200-10-□□□	500		455	365	300	250										80	19		
	ISD-MX-□-200-20-□□□				1000							950	800	700			40	–	0.3	–
	ISD-L-□-200-20-□□□	1000			930	765	640	545	465								40	9	0.3	0.3
	ISD-L-□-200-10-□□□	500			465	380	320	270	230								80	19		
	ISD-L-□-400-20-□□□	1000			930	765	640	545	465								80	19		
	ISD-LX-□-200-20-□□□						1000					950	830				40	–	0.3	–
	ISD-LX-□-400-20-□□□						1000					950	830				80	–		
IF	IF-SA□□-□-60-□□□	1750															5	–	0.3	–
	IF-SA□□-□-100-□□□	1750															10	–		
	IF-MA□□-□-200-□□□	1750															20	–		
	IF-MA□□-□-400-□□□	1750															40	–		
FS	FS-11NM-□-60-□□□	1250															2	–	0.3	–
	FS-12NM-□-60-□□□	1250															5~9	–		
	FS-11NM-□-100-□□□	1250															3	–		
	FS-12NM-□-100-□□□	1250															9~15	–		
	FS-11WM-□-100-□□□	1250															3	–		
	FS-12WM-□-100-□□□	1250															9~15	–		
	FS-11WM-□-200-□□□	1250															6	–		
	FS-12WM-□-200-□□□	1250															18~30	–		
	FS-11LM-□-400-□□□	1250															15	–		
	FS-12LM-□-400-□□□	1250															28~60	–		
	FS-11HM-□-400-□□□	2000															10	–		
	FS-12HM-□-400-□□□	2000															20~40	–		

(Note 1) The figure in each elongated circle indicates the maximum speed for the applicable stroke(s).
(Note 2) The load capacity is based on operation at the rated acceleration.

	Model	Stroke (mm)	Load capacity		Thrust (N)	Maximum speed (mm/sec) (Note 1)	Maximum acceleration (G) (Note 2)
			Horizontal (kg)	Vertical (kg)			
LSA (Linear type)	S6SS	48～1248	3	–	15	2500	3
	S6SM	40～1048	3	–	15	2500	3
	S8SS	60～1620	5	–	25	2500	3
	S8SM	60～1440	5	–	25	2500	3
	S8HS	60～1620	7	–	35	2500	3
	S8HM	60～1380	7	–	35	2500	3
	S10SS	90～2070	15	–	65	2500	3
	S10SM	60～1860	15	–	65	2500	3
	S10HS	90～2070	20	–	80	2500	3
	S10HM	105～1815	20	–	80	2500	3
	H8SS	50～1650	5	–	30	2500	3
	H8SM	130～1430	5	–	30	2500	3
	H8HS	50～1550	8	–	60	2500	3
	H8HM	130～1230	8	–	60	2500	3
	L15SS	150～1650	5	–	30	2500	3
	L15SM	50～1450	5	–	30	2500	3
	M18SS	136～1576	15	–	100	2500	3
	W21SS	1050～4155	60	–	200	2500	3
	W21SM	730～3835	60	–	200	2500	3
	W21HS	895～4000	120	–	400	2500	3
	W21HM	420～3525	120	–	400	2500	3

(Note 1) The maximum speed may not be reached with short stroke models.
(Note 2) The actual value may vary depending on the operating condition.
(Note 3) LSA type actuators cannot be used as axis 5 or 6.

⊙ How to Create a Program

1. Position Table

Position Table

The X-SEL controller P/Q types can handle up to 4,000 registered positions.
Positions are registered using the PC software or teaching pendant.

(Example of 6-axis System)

No.	Axis1	Axis2	Axis3	Axis4	Axis5	Axis6	Vel	Acc	Dcl
1	0.000	250.000	0.000	0.000	10.000	10.000			
2	0.000	200.000	0.000	30.000	20.000	20.000			
3	10.000	190.000	50.000	40.000					
4	23.000	298.000	40.000	20.000	0.000				
5	50.000	170.000	30.000	10.000					
6									
⋮	⋮	⋮	⋮	⋮	⋮	⋮			
3994									
3995									
3996									
3997									
3998									
3999									
4000									

No.: Specify a number, and the actuator will move to the position registered for the specified number in the program.

Axis1 to Axis3: Enter the target position of each axis for each position number.

Vel: Set a speed. The speed set in this field takes precedence over the speed specified in the program. In other words, the actuator uses the speed specified here when moving to the position specified for the corresponding position number.

Acc: Set an acceleration. The acceleration set in this field takes precedence over the acceleration specified in the program or one set by the applicable parameter.

Dcl: Set a deceleration. The deceleration set in this field takes precedence over the deceleration specified by the program or one set by the applicable parameter.

2. Programming Format

Program Edit Screen (PC Software)

The X-SEL controllers support programs consisting of up to 6,000 steps.
Programs are edited using the PC software or teaching pendant.

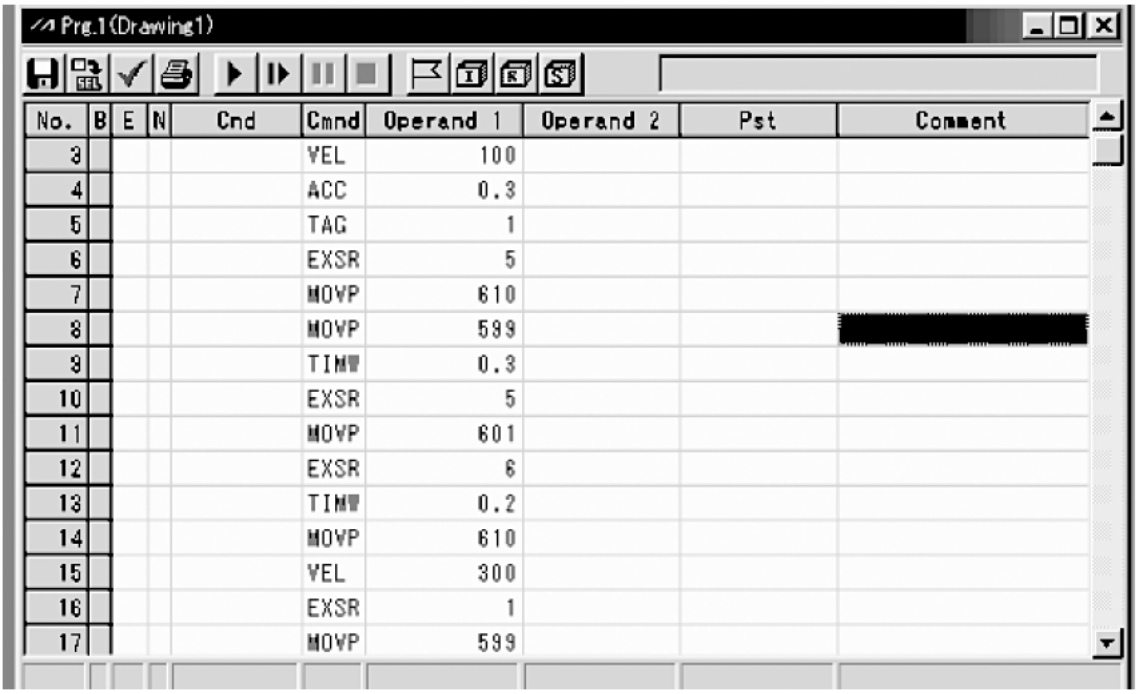

No.	B	E	N	Cnd	Cmnd	Operand 1	Operand 2	Pst	Comment
3					VEL	100			
4					ACC	0.3			
5					TAG	1			
6					EXSR	5			
7					MOVP	610			
8					MOVP	599			
9					TIMW	0.3			
10					EXSR	5			
11					MOVP	601			
12					EXSR	6			
13					TIMW	0.2			
14					MOVP	610			
15					VEL	300			
16					EXSR	1			
17					MOVP	599			

No.: Step number
B: Set a breakpoint (this field becomes editable during online edit).
Click the “B” field in the line where you want to set a breakpoint. Once a breakpoint has been set, “B” is shown in the line.
* Breakpoint --- A breakpoint is set in a step where you want to stop the program temporarily while the program is run from the PC software.
E: Enter a desired extension condition (A, O, LD, AB or OB).
N: Specify “N” to indicate negation of the input condition.
Cnd: Enter an input condition.
Cmnd: Enter a SEL command.
Operand 1: Enter operand 1.
Operand 2: Enter operand 2.
Pst: Enter an output (operand 3).
Comment: Enter a comment, if necessary (using up to 18 single-byte characters).

3. Positioning to Five Positions

Description

Move the actuator to positions 1 through 5 at a speed of 100 mm/sec after homing.
Use of only 1 axis is assumed.

Flowchart

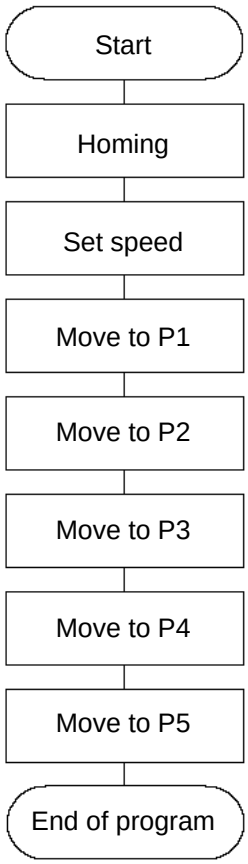

- Homing must be performed and a speed must be set, before the actuator can be operated.
- The actuator moves to the position data coordinates specified by the respective move commands.
- With the absolute specification, homing (HOME command) is not required.

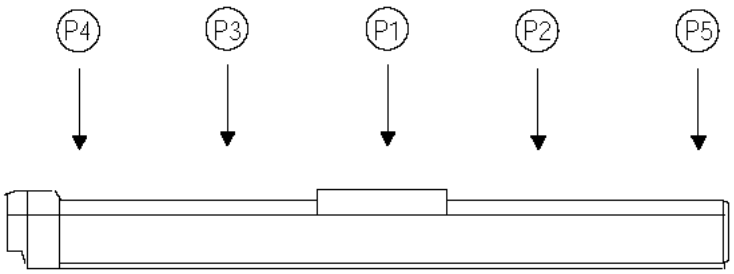

Application program

No.	B	E	N	Cnd	Cmnd	Operand 1	Operand 2	Pst	Comment
1					HOME	1			Home Axis 1
2					VEL	100			Set velocity- mm/s
3					MOVL	1			Move to point 1
4					MOVL	2			Move to point 2
5					MOVL	3			Move to point 3
6					MOVL	4			Move to point 4
7					MOVL	5			Move to point 5
8					EXIT				End Program

Position data

No.	Axis1
1	100.000
2	150.000
3	50.000
4	0.000
5	200.000
6	
7	
8	
9	

4. How to Use TAG and GOTO

Description

Use GOTO and TAG commands to repeat the same operation within the program or to jump to a desired step if a condition is satisfied. A TAG command can be written in a step either before or after a GOTO command.

Example of Use 1

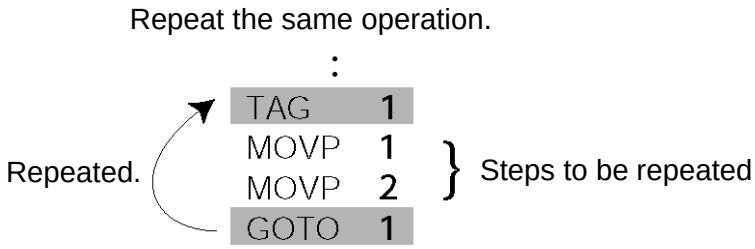

Example of Use 2

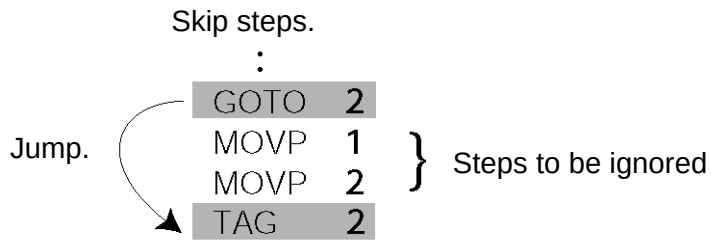

5. Moving Back and Forth between Two Points

Description

Moves back and forth between two points.

Flowchart

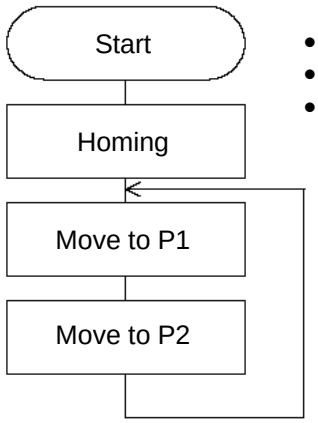

- The actuator moves back and forth between P1 and P2 indefinitely.
- Use of only 1 axis is assumed.
- Enter TAG in the first of the steps to be repeated, and enter GOTO in the last of the steps to be repeated.

Application program

No.	B	E	N	Cnd	Cmnd	Operand 1	Operand 2	Pst	Comment
1					HOME	1			Home Axis 1
2					VEL	100			Set velocity- mm/s
3					TAG	1			Set loop marker 1
4					MOVL	1			Move to point 1
5					MOVL	2			Move to point 2
6					GOTO	1			Loop to TAG 1
7									

Position data

No.	Axis1
1	100.000
2	150.000
3	
4	
5	
6	

6. Path Operation

Description

Move continuously through four arbitrary points without stopping (PATH movement).

The actuator moves along the path shown at right, without stopping at P2 and P3.
Compared with MOVP and MOVL, this command does not require the actuator to position exactly at P2 and P3, and thus the movement tact time can be reduced.
Assume the following command is executed when the actuator is stopped at P1:
PATH 2 4
The actuator will move from P1 to P4 by passing points near P2 and P3. (The passing points can be brought closer to the specified positions by increasing the acceleration.)

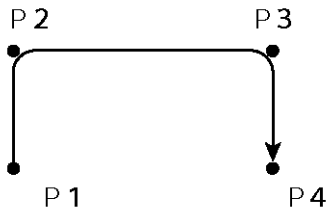

Even if “PATH 2 3” and “PATH 3 4” are input successively, the actuator will still move in the same way as when “PATH 2 4” is input.

If “PATH 4 1” is executed while the actuator is stopped at P4, the actuator will move along the same path in the opposite direction (P4 → P3 → P2 → P1).

The actuator can be moved continuously along a series of continuous positions including one discontinuous position.

```
PATH    1    4
PATH    6    6    Discontinuous position
PATH    9    10
```

As shown above, specify the position number corresponding to the discontinuous position, or position No. 6 in this case, as both the start position number and end position number of a PATH command. The actuator will move continuously along the path of position Nos. P1 → P2 → P3 → P4 → P6 → P9 → P10.

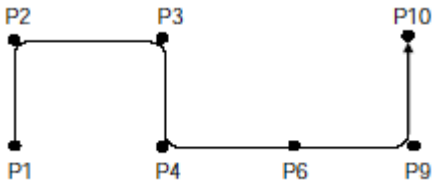

7. Output Control during Path Movement

Description

In spray operation, etc., output control may be required while the actuator is moving. The X-SEL controller can output signals while the actuator is moving with a PATH command.

How to Use

Before executing a PATH command, declare a POTP command to specify signal output during movement. If a given output or global flag is specified in the output field of the PATH command, the output or flag specified in the output field will turn ON as the actuator approaches, via path movement, the position specified in the PATH command.

Example of Use 1

The actuator moves from P1 to P5 along the positions shown at right, without stopping. As the actuator approaches P2, output port 310 turns ON.

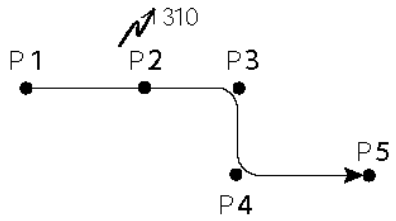

Cmnd	Operand 1	Operand 2	Pst
VEL	100		
POTP	1		
PATH	1	1	
PATH	2	2	310
PATH	3	5	

← A declaration command to specify signal output during path movement.
← 310 turns ON when the actuator approaches P2 specified in this step.

Outputs and flags can only be turned ON. The output or flag that was turned ON during path operation must be turned OFF (using a BTOF command) after the operation is completed.

Example of Use 2

Outputs 310 to 313 can be turned ON sequentially at the respective points of P2 to P5.

Cmnd	Operand 1	Operand 2	Pst
VEL	100		
POTP	1		
PATH	1	1	
PATH	2	5	310

← A declaration command to specify signal output during path movement.
← 310 to 313 turn ON sequentially at P2 to P5 specified in this step.

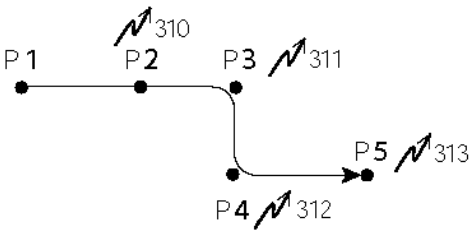

8. Circle/Arc Operation

Description

The actuator moves along a two-dimensional circle or arc.

How to Use

To specify a circle, specify three points the actuator will pass. To specify an arc, specify the starting point, passing point and end point.

Example of Use 1

Circle

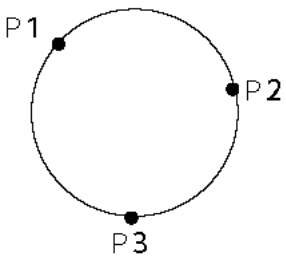

- Specify “CIR2 2 3” after the actuator has moved to P1.
- If “CIR2 2 3” is specified in the figure shown at left, the actuator will move along this circle clockwise.

E	N	Cnd	Cmnd	Operand 1	Operand 2	Pst
			VEL	100		
			MOVP	1		
			CIR2	2	3	

- To cause the actuator to move counterclockwise, specify “CIR2 3 2.”

Example of Use 2

Arc

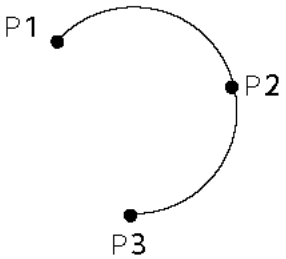

- Specify “ARC2 2 3” after the actuator has moved to P1.

E	N	Cnd	Cmnd	Operand 1	Operand 2	Pst
			VEL	100		
			MOVP	1		
			ARC2	2	3	

Reference

Circle and arc commands can be executed not only two-dimensionally (between two actuator axes) but also three-dimensionally (among three actuator axes).

CIRS: Three-dimensional circle movement
ARCS: Three-dimensional arc movement

9. Home Return Completion Output

Description

Output a signal to confirm completion of homing (incremental specification).
With the X-SEL controller, a home return completion signal can be output using an I/O parameter. However, the following explains how to output a home return completion signal within a program using a general-purpose output.
Once turned ON, a general-purpose output will remain ON even after the current program ends or other program is started. (It will turn OFF upon emergency stop, etc., but the ON status can be maintained using an I/O parameter (I/O parameter Nos. 70 and 71).)

Example of Use

a. Output a home return completion signal.

E	N	Cnd	Cmnd	Operand 1	Operand 2	Pst
			HOME	11		
			BTON	303		

Execute homing.
General-purpose output (arbitrary)

b. Use a home return completion signal to make sure the actuator will not perform homing if it has already been performed.

E	N	Cnd	Cmnd	Operand 1	Operand 2	Pst
	N	303	HOME	11		
			BTON	303		

Execute homing if output 303 is OFF.
Home return completion output

c. Use the output field instead of a BTON command.

E	N	Cnd	Cmnd	Operand 1	Operand 2	Pst
	N	303	HOME	11		303

Execute the same processing performed with the above two steps.

Reference

Output port No. 304 can be used as a home return completion output (dedicated output) by setting I/O parameter No. 50 to “2.”

10. Axis Movement by Input Waiting and Completion Output

Description

How to perform input waiting and output a processing completion signal is explained.

Flowchart

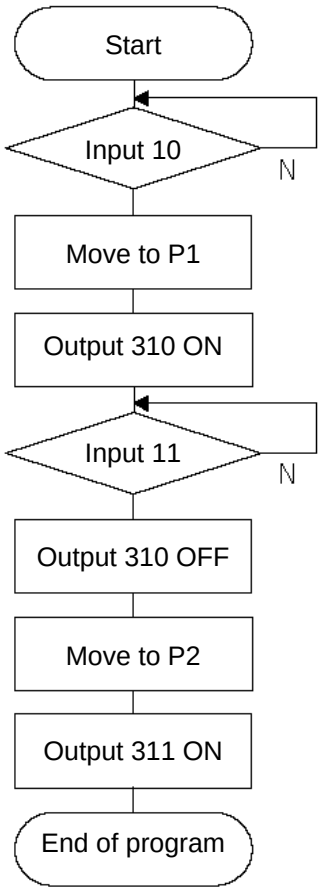

Example of Use

The actuator waits until input port 10 turns ON, and then moves to P1.
The actuator waits until input port 11 turns ON, and then moves to P2.
A movement completion signal is output from 310 upon reaching P1, and from 311 upon reaching P2.

Application program

E	N	Cnd	Cmnd	Operand 1	Operand 2	Pst	Comment
			VEL	100			Set velocity- mm/s
			WTON	10			Wait on input 10
			MOVP	1			Move to point 1
			BTON	310			Turn ON output 310
			WTON	11			Wait on input 11
			BTOF	310			Turn OFF outpt 310
			MOVP	2			Move to point 2
			BTON	311			Turn ON output 310
			EXIT				End Program

11. Changing the Moving Speed

Description

Change the moving speed.

How to Use

With the X-SEL controller, the speed can be set using the following two methods:
a: Use a VEL command within the application program
b: Use a speed setting in the position data table

Example of Use

Application program

E	N	Cnd	Cmnd	Operand 1	Operand 2	Pst
			MOVP	1		
			VEL	1000		
			MOVP	2		
			MOVP	3		
			VEL	50		
			MOVP	4		

Position data

No.	Axis1	Vel	Acc	Dcl
1	100.000	100		
2	200.000	500		
3	300.000			
4	400.000			

Moving speeds in the above program

Position at 100 mm --- The actuator moves at 100 mm/sec.
Position at 200 mm --- The actuator moves at 500 mm/sec.
Position at 300 mm --- The actuator moves at 1000 mm/sec.
Position at 400 mm --- The actuator moves at 50 mm/sec.

If a speed is specified in the position data table, this speed takes precedence over the speed specified in the application program, as shown above. In general, speeds are set in the application program using VEL.

Vel in Point Data Table and PATH Command

The speed can be changed without stopping the actuator, by using a PATH command and Vel in the position data table. (Refer to the next page.)

12. Changing the Speed during Operation

Description

Use a PATH command to change the speed while the actuator is moving.
For example, this command is useful in a paint dispensing application where the application volume changes in the middle.

Example of Use

The actuator moves through linear sections a, b and c at 50 mm/sec, 20 mm/sec and 50 mm/sec, respectively, without stopping (PATH movement).

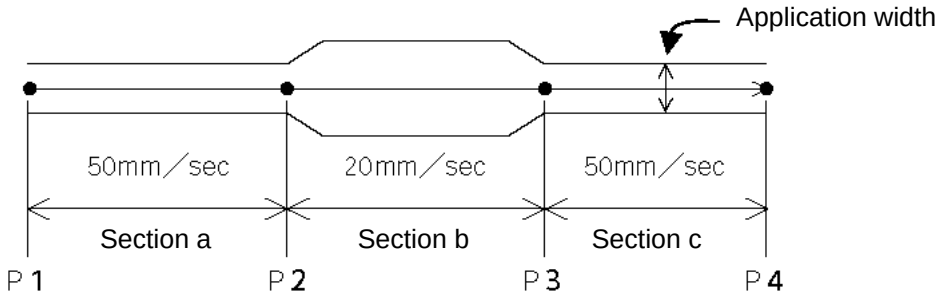

Position data

No.	Axis1	Vel	Acc	Dcl
1	0.000	50		
2	100.000	50		
3	200.000	20		
4	300.000	50		

Application program

“PATH 1 4” is the only movement command required.

E	N	Cnd	Cmnd	Operand 1	Operand 2	Pst
			PATH	1	4	

Reference

The speed can also be changed from other program using a CHVL (speed change) command (in the multi-tasking mode).

13. Local/Global Variables and Flags

Description

The internal variables and flags used in the SEL language are classified into local and global types. The data range used commonly by all programs is called the global range, while the data range used only by each program is called the local range. When multi-tasking programs are run simultaneously, the global range must be used to synchronize the programs and allow cross-referencing of variables among the programs.

Example of Use

Program handshake

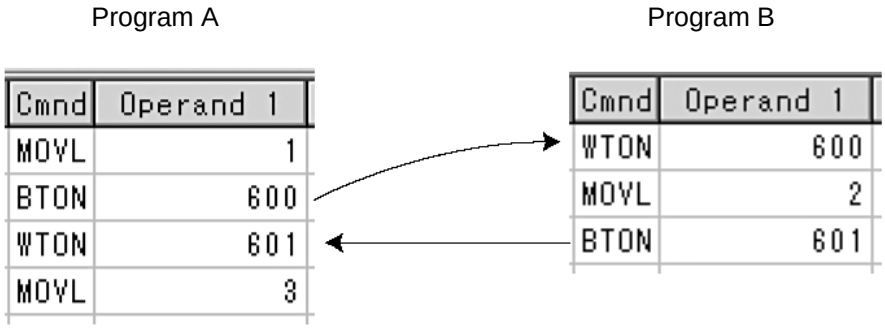

Use of global flags with the above two programs permits handshake between the programs, and the actuator moves per “MOVL 1” in program A, moves per “MOVL 2” in program B, and then move per “MOVL 3” in program A, for example.

Backup in Battery

The X-SEL controller has a built-in battery for retaining variables and flags used in the programs. For both variables and flags, only those in the global range will be retained after the controller power is turned off. The variables and flags in the local range are cleared when the program is started (the variables are reset to “0,” while the flags turn OFF).

14. How to Use Subroutines

Description

A subroutine is a group of steps that are called and executed several times within a program. Subroutines are used to reduce the number of program steps and make the program easy to read. Up to 99 subroutines can be used in one program. Up to 15 subroutine calls can be nested.

How to Use

Declare/call subroutines using the following commands:
EXSR: Call a subroutine
BGSR: Declare the start of a subroutine (start of a group of steps)
EDSR: Declare the end of a subroutine (end of a group of steps)

Example of Use

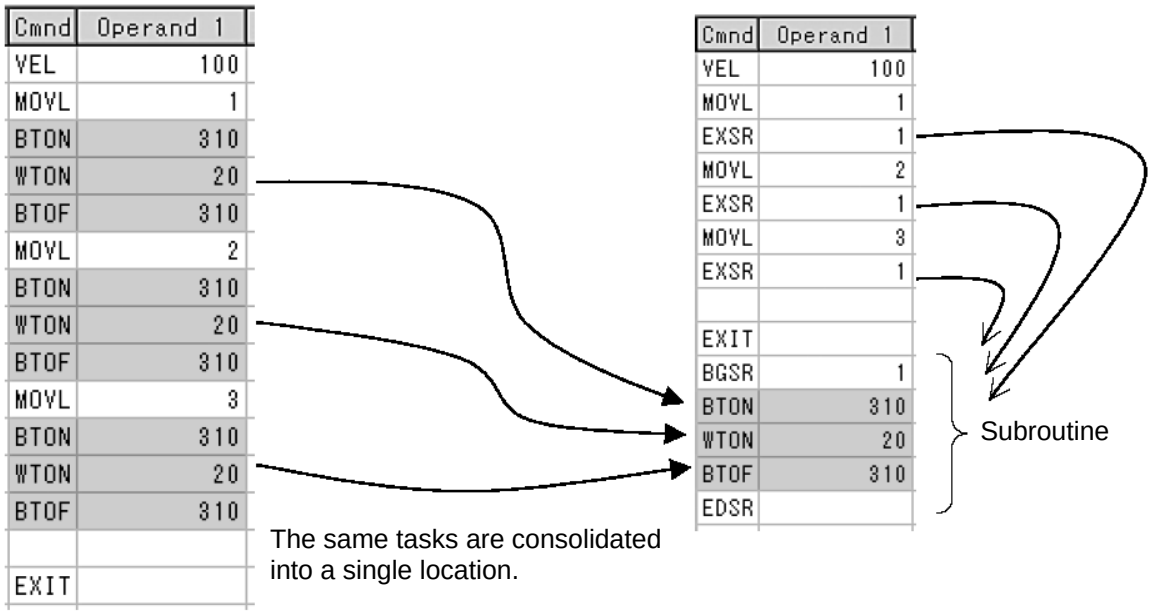

Caution

Jumping from within a subroutine to a TAG position outside the subroutine using a GOTO command is prohibited.

15. Pausing the Operation

Description

Use a declaration command HOLD to pause the moving axis temporarily via external input.

How to Use

A pause interruption operation can be executed to a moving axis (to decelerate the axis to a stop) by declaring a HOLD command within the program.
While HOLD is input, the actuator pauses (decelerates to a stop, if currently moving) against all moving commands in the same program.

Example of Use

HOLD 20 A declaration to execute pause if general-purpose input 20 turns ON.

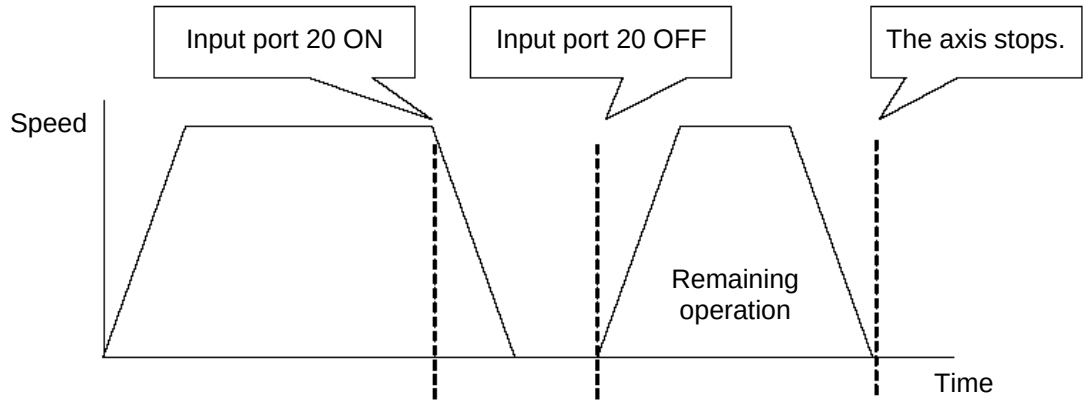

Application

You can specify a global flag, instead of an input port, in Operand 1 of the HOLD command.
Use of a global flag allows the actuator to be paused from other program.
The input signal pattern and stop action can be selected using Operand 2.

0 = Contact a (Decelerates to a stop) ⇒ Same as when Operand 2 is not specified.
1 = Contact b (Decelerates to a stop)
2 = Contact b (Decelerates to a stop, and then servo OFF ⇒ The drive power is not cut off.)

E	N	Cnd	Cmnd	Operand 1	Operand 2	Pst	Comment
			HOLD	20	2		SVOF when input 20

Caution

If the actuator is paused during homing, it will start the homing sequence from the beginning upon restart.

16. Canceling the Operation 1 (CANC)

Description

Use a declaration command CANC to decelerate the moving axis to a stop and cancel the remaining operation.

How to Use

While CAN is input, all movement commands in the same program are cancelled.

Example of Use

CANC command

```
CANC   20        Cancel the movement commands if input port 20 turns ON (declaration).
  :
MOVP    1
MOVP    2
  :
WTON   21
  :
```

* Declare this command in a step before the movement commands you want to cancel.
* While CANC is input, all operation commands are cancelled sequentially, while tasks other than operation commands (such as I/O processing and calculation processing) are executed sequentially.

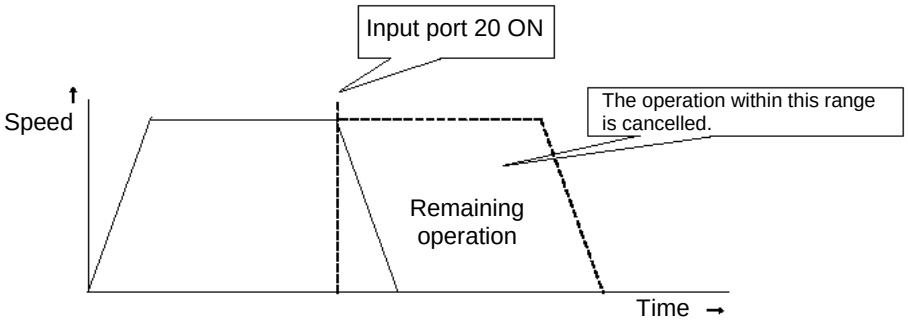

Caution

Since execution of this command makes it no longer possible to specify which program step is currently executed, it is recommended that a WTON command be used to create an input wait step.

Application

A desired input signal pattern can be selected for a CANC command using Operand 2.

0 = Contact a (Decelerates to a stop) ⇒ Same as when Operand 2 is not specified.
1 = Contact b (Decelerates to a stop)

E	N	Cnd	Cmnd	Operand 1	Operand 2	Pst	Comment
			CANC	20	1		Halt when input 20

17. Canceling the Operation 2 (STOP)

Description

Decelerate the moving axis to a stop and cancel the remaining operation. (STOP)

How to Use

Execute a STOP command from other program to forcibly stop the operation (in the multi-tasking mode). Specify the axis you want to stop using an axis pattern.

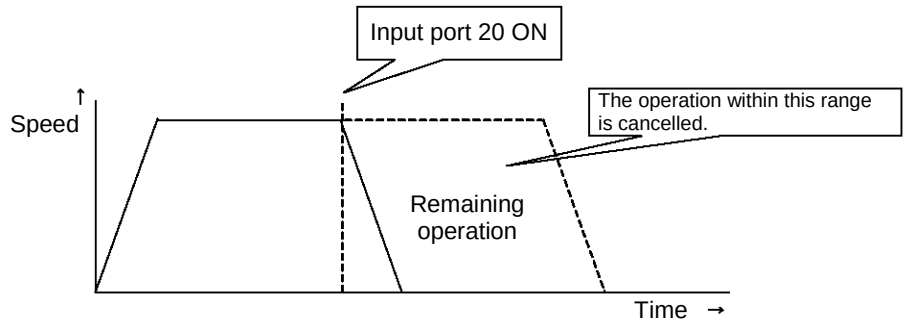

Example of Use 1

STOP command
Main program

```
EXPG    n    The stop program starts.
  :
MOVL    1
MOVL    2
  :
```

Stop control program

```
WTON    20   Wait for stop input.
STOP    11   Axes 1 and 2 stop.
```

If “STOP 11” is executed while “MOVL 1” is being executed, “MOVL 1” will be cancelled and the actuator will continue its operation from “MOVL 2.”

Example of Use 2

Main program

```
EXPG    n    The stop program starts.
  :
MOVP    1
MOVP    2
  :
```

Stop control program

```
WTON    20   Wait for stop input.
STOP    10   Axis 2 stops.
```

If “STOP 10” is executed while “MOVL 1” is being executed, only the axis 2 part of “MOVL 1” will be cancelled. Both axes 1 and 2 will operate under “MOVL 2.”

Caution

If a STOP command is executed during a CP operation (interpolation operation) initiated by MOVL, etc., the operations of all axes will be cancelled regardless of the axis pattern specified in the STOP command.

18. Movement by Position Number Specification

Description

Load externally input BCD codes as position numbers to execute movements.

Example of Use

Use an INB command to load a position number as a BCD code from an input port.
A position number can be specified using a value consisting of up to three digits.

Flowchart

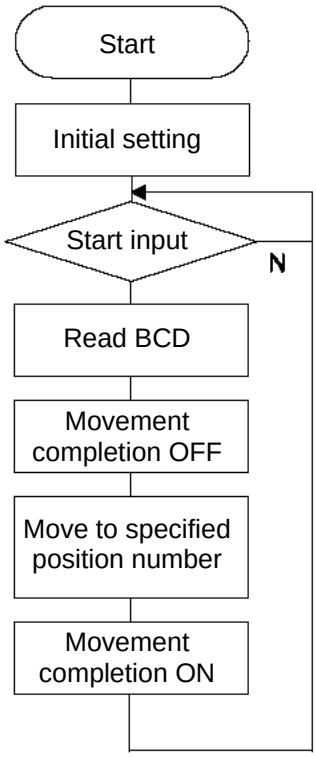

Input assignment

Port	Description
1	Start input
15	Position specification 1
16	Position specification 2
17	Position specification 4
18	Position specification 8
19	Position specification 10
20	Position specification 20
21	Position specification 40
22	Position specification 80
23	Position specification 100
24	Position specification 200
25	Position specification 400
26	Position specification 800

Output

303 Movement completion

Application program

E	N	Cnd	Cmnd	Operand 1	Operand 2	Pst	Comment
			HOME	11			Home axis 1 & 2
			VEL	100			Set velocity- mm/s
			TAG	1			Set loop marker 1
			WTON	1			Wait on start inpt
			INB	15	3		Read position #
			BTOF	303			Mov cmplt sgnl OFF
			MOVL	*99			Move to position
			BTON	303			Move cmplt sgnl ON
			GOTO	1			Jump to marker 1 ^

19. Movement by External Position Data Input

Description

Receive target position data as absolute values from a host device to execute movements.

Example of Use

Use an INB command to load position data as a BCD code from an input port.
Each BCD value should consist of four digits, with the last digit indicating a decimal place.
The moving axis is axis 1.
Example: If a BCD of “1234” is received, the axis will move to the position at 123.4 mm.

Flowchart

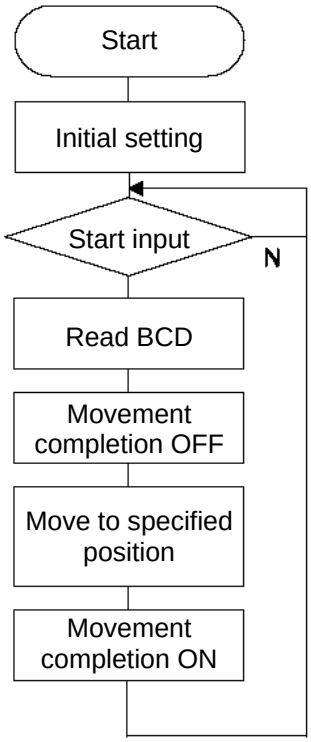

Input assignment

Port	Description
1	Start input
15	0.1mm
16	0.2mm
17	0.4mm
18	0.8mm
19	1mm
20	2mm
21	4mm
22	8mm
23	10mm
24	20mm
25	40mm
26	80mm
27	100mm
28	200mm
29	400mm
30	800mm

Output

303 Movement completion

Application program

E	N	Cnd	Cmnd	Operand 1	Operand 2	Pst	Comment
			HOME	11			Home axis 1 & 2
			VEL	100			Set velocity- mm/s
			TAG	1			Set loop marker 1
			WTON	1			Wait on start inpt
			INB	15	4		Read position #
			LET	199	*99		Indirect refernce
			DIV	199	10		Div by 10 resolutn
			PPUT	1	1000		Put 1K for axis 1
			BTOF	303			Mov cmplt sigl OFF
			MOVL	1000			Move to entry pos.
			BTON	303			Mov cmplt signl ON
			GOTO	1			Jump to marker 1 ^

20. Outputting Coordinates

Description

Read the current actuator coordinate in real time and output the reading from an output port as BCD data.

Example of Use

Use a PRDQ command to load the current coordinate position of axis 1.
The current coordinate data of axis 1 is output as BCD data at 0.2-second intervals.
The output range is 0.00 to 999.99 mm.

BCD output assignment

Output port No.	Description	Output port No.	Description
324	0.01	336	10
325	0.02	337	20
326	0.04	338	40
327	0.08	339	80
328	0.1	340	100
329	0.2	341	200
330	0.4	342	400
331	0.8	343	800
332	1		
333	2		
334	4		
335	8		

Unit: mm

Application program

E	N	Cnd	Cmnd	Operand 1	Operand 2	Pst	Comment
			TAG	1			Loop marker 1
			PRDQ	1	101		Place data in 101
			MULT	101	100		Round to thousanth
			LET	99	*101		Copy indirect valu
			OUTB	324	5		Output 5 digts BCD
			TIMW	0.2			Time wait (secs)
			GOTO	1			Loop to marker 1 ^

* With a PRDQ command, the current position coordinate is written to variable 101.
Since the coordinate is read by the variable in the “XXX.XXX” format, the unused digits are moved to decimal place to enable BCD output.
In the above example, the third and subsequent decimal places are not required, so the read value is multiplied by 100 to obtain data in the “XXXXX.X” format.
Next, this value is copied to variable 99 used exclusively for BCD output.
During this conversion, the decimal place is rounded off.
Then, the copied value is output to an external device using an OUTB command.
This program is used as a subprogram in the multi-tasking mode.

21. Conditional Jump

Description

Select the destination to jump to via GOTO using the external input, output and/or internal flag statuses as a condition.
The controller waits for multiple inputs, and performs processing according to the received input(s).

Example of Use 1

If input 10 turns ON, the actuator will jump to TAG 1. If it turns OFF, the actuator will proceed to the next processing.

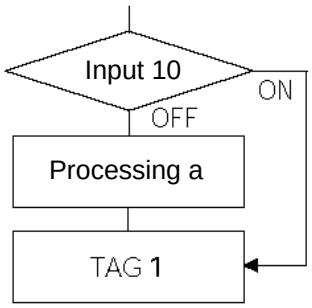

E	N	Cnd	Cmnd	Operand 1
		10	GOTO	1
			Processing a	
			TAG	1
			Processing b	

Execute GOTO 1 if input 10 turns ON.

* If input 10 turns ON, the actuator will skip processing a and perform processing b.
  If input 10 turns OFF, the actuator will perform processing a, and then perform processing b.

Example of Use 2

The controller waits for an input signal to be received at input port 10 or 11. If an input signal is received at input 10, the actuator will perform processing a. If an input signal is received at input 11, it will perform processing b.

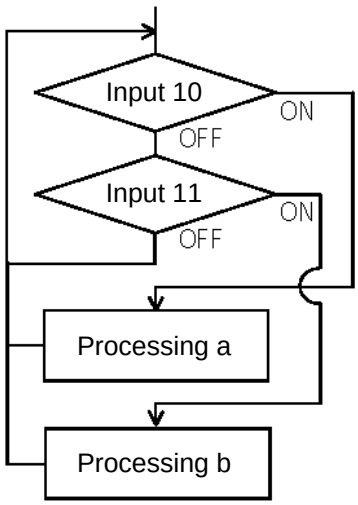

E	N	Cnd	Cmnd	Operand 1
			TAG	1
		10	GOTO	2
		11	GOTO	3
			GOTO	1
			TAG	2
			Processing a	
			GOTO	1
			TAG	3
			Processing b	
			GOTO	1

No input.
Input 10 turns ON.
Input 11 turns ON.

If both inputs 10 and 11 turn ON, the actuator will perform processing a.

22. Waiting Multiple Inputs

Description

The controller waits for multiple different inputs and performs processing upon reception of any of these inputs.

Point

A WTON command permits processing only when the specified input is received. The controller cannot wait for multiple inputs.

Example of Use

Inputs 10 and 20 are monitored, and the actuator will proceed to the next step when either input is received (OR logic).

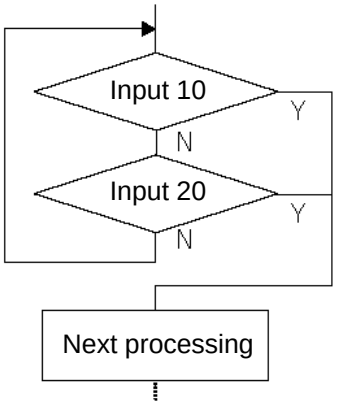

Program a

E	N	Cnd	Cmnd	Operand 1
			TAG	1
		10		
0		20	GOTO	2
			GOTO	1
			TAG	2

Next processing

Program b

E	N	Cnd	Cmnd	Operand 1
			TAG	1
	N	10		
A	N	20	GOTO	1

Next processing

* Both programs a and b perform the same processing.

As shown in the sample, the controller waits for input without using a WTON command.
This method can also be used when multiple input conditions must be combined.

23. How to Use Offset

Description

With an OFST command, an offset can be specified for position data when you want to shift (offset) all teaching points by several millimeters because the actuator was not installed exactly in the specified position or for other reasons.
An OFST command can also be used to perform pitch feed. (Refer to 25, “Constant-pitch Feed.”)

E	N	Cnd	Cmnd	Operand 1	Operand 2	Pst	Comment
			VEL	100			Set velocity- mm/s
			MOVP	1			Move to point 1
			OFST	1	80		Offset axis 1 80mm
			MOVP	1			Move to point 1

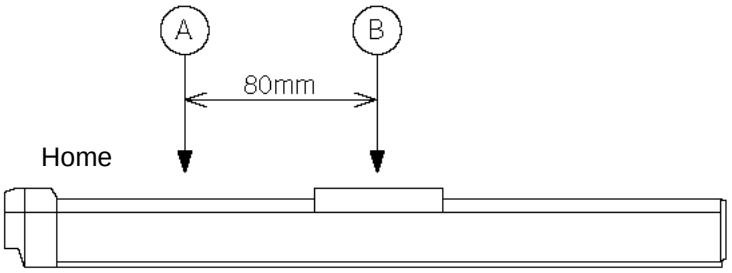

Caution

Once an offset has been set, the offset applies to all movement commands executed thereafter. To cancel the offset, execute an offset command again by specifying “0” mm. An offset does not apply to other programs (even in the multi-tasking mode). If a given offset must be applied to all programs, it must be set for all programs individually.

24. Executing an Operation N times

Description

Execute a specific operation n times.

Example of Use

The actuator moves back and forth between P1 and P2 ten times, and then the program ends.
Use a CPEQ command to compare the number of times the movement has been actually repeated, against 10.
It is assumed that homing has been completed.

Application program

E	N	Cnd	Cmnd	Operand 1	Operand 2	Pst	Comment
			VEL	100			Set velocity- mm/s
			LET	1	0		Initlz counter 1
			TAG	1			Set loop marker 1
			MOVP	1			Move to point 1
			MOVP	2			Move to point 2
			ADD	1	1		Incrmt cntr by 1
			CPEQ	1	10	900	Repeat 10 times
	N	900	GOTO	1			Loop if not done
			EXIT				Else end program

Reference

The same operation can also be performed using a DWEQ command.

25. Constant-pitch Feed

Description

Feed the actuator by a specified pitch n times from a reference point.
The pitch and number of repetitions are specified by variables in advance.

Flowchart

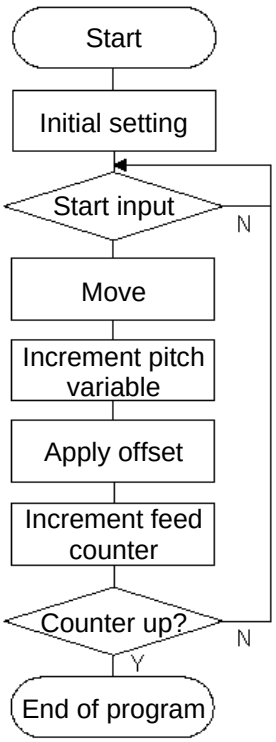

Example of Use

Use an OFST command to perform pitch feed.
The number of times the actuator has been fed is counted by a counter variable.
The X-axis is fed in the positive direction.

Point
An OFST command applies to movement commands.
Executing an OFST command alone does not move the axis.

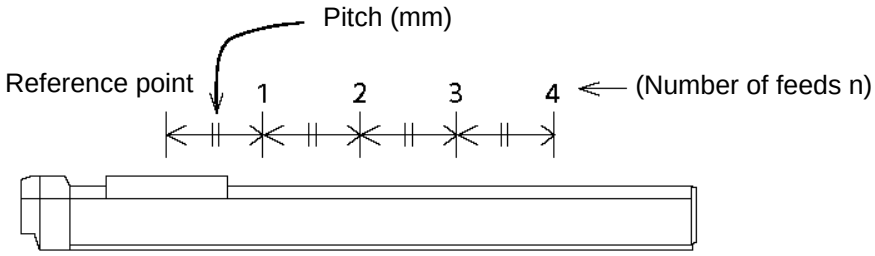

Application program

E	N	Cnd	Cmnd	Operand 1	Operand 2	Pst	Comment
			LET	1	4		Variable feed #= 4
			LET	100	80		Var. pitch = 80mm
			LET	2	0		Clear counter 2
			LET	101	0		Initializ var. 101
			HOME	1			Home axis 1
			VEL	100			Set velocity- mm/s
			TAG	1			Set loop marker 1
			WTON	1			Wait on start inpt
			MOVP	1			Move to point 1
			ADD	101	*100		Add pitch to offst
			OFST	1	*101		Process x offset
			ADD	2	1		Add 1 to counter 2
			CPGT	2	*1	900	Confirm feed cmplt
	N	900	GOTO	1			Repeat if needed
			EXIT				End Program

Reference

Pitch feed can also be performed using a MVPI or MVLI command.

26. Jogging

Description

The slider moves forward or backward while an input is ON or OFF.
Instead of an input, an output or global flag can be used as a cue.
The slider will move directly to the next step if the specified input does not satisfy the condition when the command is executed.
Regardless of the input status, the slider will stop upon reaching the soft limit, and the command in the next step will be executed.

How to Use

- Explanation of commands

JFWN	1	20	Axis 1 moves forward while input 20 is ON.
JFWF	1	21	Axis 1 moves forward while input 21 is OFF.
JBWN	10	22	Axis 2 moves backward while input 22 is ON.
JBWF	10	23	Axis 2 moves backward while input 23 is OFF.

Example of Use 1

- Stop the axis when a sensor input is received.

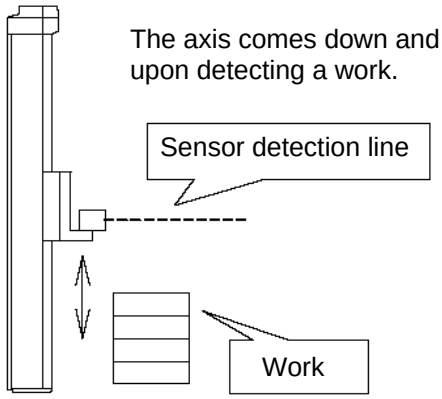


```
   :
VEL   50          Specify a low speed.
JFWF  1   20      Move until a sensor input (20) is received.
EXIT              The program ends.
```

Example of Use 2

- Cause the actuator to jog just like in teaching pendant operation (2 axes are operated).

Application program

E	N	Cnd	Cmnd	Operand 1	Operand 2	Pst
			TAG	1		
			JFWN	1	20	
			JBWN	1	21	
			JFWN	10	22	
			JBWN	10	23	
	N	24	GOTO	1		
			EXIT			

Reference

HOLD, STOP and CANC commands remain valid while the actuators are jogging.

27. Switching Programs

Description

Use EXPG/ABPG commands to switch programs using a program.

Example of Use 1

Start program 2 once the processing of program 1 is completed, and then end program 1.

Program 1	Program 2
:	:
EXPG 2	:
EXIT	

Example of Use 2

Start a program via an external signal, and then end the other program.

Program 1	Program 2
ABPG 2	ABPG 1
:	:

If program 2 is started while program 1 is running, program 1 will be aborted.
If program 1 is started while program 2 is running, program 2 will be aborted.

Application

If a program number is specified in operand 2, the programs from the one corresponding to the program number in operand 1 to the other corresponding to the program number in operand 2 can be started (EXPG) or ended (ABPG) simultaneously.

Caution

- The X-SEL controller supports multi-tasking. Up to 16 programs can be run at the same time. To use other programs when the controller is already running 16 programs, switch programs by closing a program or programs that are not required.
- If an ABPG command was executed to end a program while the program was executing a movement command, the actuator immediately decelerates to a stop.

28. Aborting a Program

Description

Abort a program currently running.
Execute an ABPG command (command to abort other program) from other program in the multi-tasking mode.

Caution

* If the target program was executing a movement command, the actuator immediately decelerates to a stop and the program ends.

Example of Use

Main program (Prg. 1)

```
EXPG    n     The abort control program starts.
WTON    10
MOVP    1
BTON    303
  :
  :
```

Abort control program (Prg. n)

```
WTON    20    Wait for an abort input.
ABPG    1     Prg. 1 is aborted.
EXIT          The program ends.
```

* If ABPG was executed while the actuator was moving via a MOVP command, the actuator immediately decelerates to a stop and the program ends.

⊙ Battery Backup Function

The X-SEL controller uses the following two batteries.

System-memory backup battery
A coin-type battery is used to back up the position data, SEL program variables, etc., in the controller. Each controller is shipped with the system-memory backup battery.

Absolute-data backup battery
A separate battery is used to retain the absolute encoder's rotation data, so that the motor rotation data can be retained/refreshed when the controller power is cut off. A controller specified with an absolute-type actuator is shipped with the absolute-data backup battery.

Each battery is explained in details.

1. System-Memory Backup Battery

A coin-type battery with holder is installed in the panel on the front side of the controller, in order to retain the various data stored in the SRAM of the X-SEL controller even when the power is cut off, thus effectively implementing a system memory backup.

The data to be backed up by this battery include control parameters, SEL language variable data (global variables) and position table data. These data can be retained even when the power is cut off.

Note, however, that these data are also stored in the flash ROM. If you want your equipment to always start with the defaults (data in the flash ROM) after a power failure or software reset, this battery need not be installed (in such a case, set a controller parameter (other parameter No. 20) to that the system-memory backup battery will not be used).

The system-memory backup battery is a coin-type battery manufactured by Toshiba. Since the retention characteristics of this battery will vary significantly depending on the storage temperature and operating environment, due caution must be exercised when handling the battery.

Although this coin-type battery is readily available in supermarkets, convenience stores, etc., batteries by other manufacturers may offer different retention characteristics. To maintain consistency, use a battery by the same manufacturer whenever possible.

<Backup Time>
The recommended replacement interval for the system-memory backup battery is one and a half years. This may be a little misleading. It means that if the battery is left at an ambient temperature of 40°C, it will retain the stored data for one and a half years. In normal operating conditions, the battery can retain data for a longer period.
As a guide, the battery will last for around three years if the controller is used at an ambient temperature of 40°C with the controller powered up 50% of the time.

<Battery Replacement>
To replace the system-memory backup battery, open the panel window on the front side of the controller and replace the coin-type battery in the battery holder.

It is recommended that the battery be replaced regularly in accordance with the power-on frequency/duration of the controller.

The battery must be replaced as soon as the controller's battery voltage monitor function generates a battery voltage low alarm.

After an alarm is detected, a battery error will occur in approx. 10 days at an ambient temperature of 20°C if the power is supplied to the controller continuously. Once a battery error occurs, the data will be physically lost in approx. four days.

If the controller is not operated, the above periods should be reduced to 80% at 20°C or to 25% at 40°C.

The controller is designed so that the data will not be lost for at least 30 minutes without a battery if the controller is not detecting a battery error. Keep in mind to complete the battery replacement—taking out the current battery from the battery holder and placing a new battery in the holder—within 30 minutes.

To prevent the risk of data loss, you can use the PC software to evacuate the data in the SRAM to the flash ROM and then reload the flash ROM data to the SRAM after a new battery is installed.

The battery specifications are shown in the table below.

List of System-Memory Backup Battery Functions

Battery type	CR2032 (by Toshiba)	
Battery voltage	3 V	
Current capacity	220 mAH	
Switching voltage at momentary power failure	(Typical) 2.81 V (2.7 V ~ 2.93 V)	System reset detection voltage
Power-source voltage drop at backup	(Typical) 0.3 V	
Detection voltage for battery voltage low alarm	(Typical) 2.65 V ± 5%	
Detection voltage for battery voltage low error	(Typical) 2.37 V ± 5%	
Time after alarm detection until error detection (reference)	10 days at 20°C based on continuous operation; 8 days if the power is not supplied. 10 days at 40°C based on continuous operation; 2.5 days if the power is not supplied.	
Minimum data retention voltage	Min. 2.0 V (Varies depending on the SRAM characteristics.)	
Time after error detection until data loss (reference)	4 days at 20°C based on continuous operation; 3 days if the power is not supplied. 4 days at 40°C based on continuous operation; 1 day if the power is not supplied.	
Data protection time during battery replacement	30 minutes (Maximum retention time when no battery is installed in the battery holder)	Data is retained by the super capacitor inside the controller.
Guide on when to replace battery	Temperature 40°C, power ON time 0%	1.5 years
	Temperature 40°C, power ON time 50%	3 years

2. Absolute-Data Backup Battery

If the X-SEL controller is to drive an absolute-type actuator, an absolute-data backup battery must be installed in the controller.

An absolute encoder is designed to retain rotation data and detect rotations using the power supplied from the absolute-data backup battery, even when the controller's control power is not supplied, thus allowing the controller to resume positioning control immediately after the controller power is restored, without performing home return.

<Backup Time>
The recommended replacement interval for the absolute-data backup battery is two years. This may be a little misleading. It means that if the battery is left at an ambient temperature of 40°C, it will retain the stored data for two years. In normal operating conditions, the battery can retain data for a longer period.

As a guide, the battery will last for around four years if the controller is used at an ambient temperature of 40°C with the controller powered up 50% of the time.

<Battery Replacement>
To replace the absolute-data backup battery, open the panel on the front side of the absolute brake unit in the controller and replace the battery in the battery holder.

It is recommended that the battery be replaced regularly in accordance with the power-on frequency/duration of the controller.

The battery must be replaced as soon as the controller's battery voltage monitor function generates a battery voltage low alarm.

After an alarm is detected, a battery error will occur in approx. 10 days at an ambient temperature of 20°C if the power is supplied to the controller continuously. Once a battery error occurs, operations can no longer be performed unless the battery is replaced and an absolute encoder reset is performed.

If the controller is not operated, the above periods should be reduced to 70% at 20°C or to 60% at 40°C.

The controller is designed so that the data will not be lost for at least 15 minutes without a battery if the controller is not detecting a battery error. Keep in mind to complete the battery replacement—taking out the current battery from the battery holder and placing a new battery in the holder—within 15 minutes.

To prevent the risk of data loss, you can use the PC software to evacuate the data in the SRAM to the flash ROM and then reload the flash ROM data to the SRAM after a new battery is installed.

The absolute-data backup battery is replaced differently depending on whether a battery error has generated or not. If an error has not been detected, all you need is to replace the battery and the absolute encoder need not be reset. If an error has been detected, an absolute encoder reset will be required.

The X-SEL controller provides an enable switch for absolute-data backup battery for each controller axis. When replacing any absolute-data backup battery following a battery error, turn the absolute-data backup battery enable/disable switch of the target axis to OFF (the controller power should be turned off during the replacement). Once a new battery has been installed, turn on the controller power, and then reset the absolute-data backup battery enable/disable switch to the ENB (enable) position. If this order (turn on the controller power → enable the switch) is not followed, the absolute-encoder data will not be backed up properly and the absolute-data backup battery will consume abnormally large amounts of power. In the worst condition, the battery voltage may drop to zero in several weeks.

The battery specifications are shown in the table below.

List of Absolute-Data Backup Battery Functions

Battery type	AB-5 (by IAI)	
Battery voltage	3.6 V	
Current capacity	2000 mAH	
Detection voltage for battery voltage low alarm	(Typical) 3.1 V, 3.0 V ~ 3.2 V	
Detection voltage for battery voltage low error	(Typical) 2.5 V, 2.3 V ~ 2.7 V	
Time after alarm detection until error detection (reference)	10 days at 20°C based on continuous operation; 7 days if the power is not supplied. 10 days at 40°C based on continuous operation; 2.5 days if the power is not supplied.	
Minimum data retention voltage	Min. 2.7 V (Varies depending on the encoder characteristics.)	
Time after error detection until data loss (reference)	With the absolute-data backup battery, an absolute encoder reset will be required following a battery error.	
Data protection time during battery replacement	15 minutes (Maximum retention time when no battery is installed in the battery holder)	Data is retained by the super capacitor inside the absolute brake unit.
Guide on when to replace battery	Temperature 40°C, power ON time 0%	2 years
	Temperature 40°C, power ON time 50%	4 years

⊙ Expansion I/O Board (Optional)

Type: IA-103-X-32

Pin No.	Category	Port No.	Function
1	Input	-	+24-V input
2		32	General-purpose input
3		33	General-purpose input
4		34	General-purpose input
5		35	General-purpose input
6		36	General-purpose input
7		37	General-purpose input
8		38	General-purpose input
9		39	General-purpose input
10		40	General-purpose input
11		41	General-purpose input
12		42	General-purpose input
13		43	General-purpose input
14		44	General-purpose input
15		45	General-purpose input
16		46	General-purpose input
17		47	General-purpose input
18		48	General-purpose input
19		49	General-purpose input
20		50	General-purpose input
21		51	General-purpose input
22		52	General-purpose input
23		53	General-purpose input
24		54	General-purpose input
25		55	General-purpose input
26		56	General-purpose input
27		57	General-purpose input
28		58	General-purpose input
29		59	General-purpose input
30		60	General-purpose input
31		61	General-purpose input
32		62	General-purpose input
33		63	General-purpose input
34	Output	316	General-purpose output
35		317	General-purpose output
36		318	General-purpose output
37		319	General-purpose output
38		320	General-purpose output
39		321	General-purpose output
40		322	General-purpose output
41		323	General-purpose output
42		324	General-purpose output
43		325	General-purpose output
44		326	General-purpose output
45		327	General-purpose output
46		328	General-purpose output
47		329	General-purpose output
48		330	General-purpose output
49		331	General-purpose output
50		-	0 V

Type: IA-103-X-16

Pin No.		Port No.	Function
1	Input	-	+24-V input
2		32	General-purpose input
3		33	General-purpose input
4		34	General-purpose input
5		35	General-purpose input
6		36	General-purpose input
7		37	General-purpose input
8		38	General-purpose input
9		39	General-purpose input
10		40	General-purpose input
11		41	General-purpose input
12		42	General-purpose input
13		43	General-purpose input
14		44	General-purpose input
15		45	General-purpose input
16		46	General-purpose input
17		47	General-purpose input
18	Output	316	General-purpose output
19		317	General-purpose output
20		318	General-purpose output
21		319	General-purpose output
22		320	General-purpose output
23		321	General-purpose output
24		322	General-purpose output
25		323	General-purpose output
26		324	General-purpose output
27		325	General-purpose output
28		326	General-purpose output
29		327	General-purpose output
30		328	General-purpose output
31		329	General-purpose output
32		330	General-purpose output
33		331	General-purpose output
34		332	General-purpose output
35		333	General-purpose output
36		334	General-purpose output
37		335	General-purpose output
38		336	General-purpose output
39		337	General-purpose output
40		338	General-purpose output
41		339	General-purpose output
42		340	General-purpose output
43		341	General-purpose output
44		342	General-purpose output
45		343	General-purpose output
46		344	General-purpose output
47		345	General-purpose output
48		346	General-purpose output
49		347	General-purpose output
50		-	0 V

Note) Port numbers indicate ports on an I/O1 (I/O2) expansion board.

⊙ Number of Regenerative Resistors to Be Connected

Regenerative energy that generates when the actuator decelerates to a stop or moves downward in a vertical installation is absorbed through the capacitor or resistor inside the controller. Excess regenerative energy that cannot be fully absorbed in the controller will cause an overvoltage error and prevent continued operation.

In situations where excessive regenerative energy generates, the following measures must be taken:

- Connect an external regenerative resistor or resistors. (Refer to “Guideline for Number of External Regenerative Resistors to Be Connected” below.)
- Increase the cycle time.
- Reduce the speed.
- Reduce the travel distance (in a vertical installation).
- Reduce the load.
- Do not perform synchronous operations (when multiple axes are connected).

  In a horizontal installation, regenerative energy generates when the actuator decelerates to a stop. In a vertical installation, regenerative energy generates mainly when the actuator moves downward. In a configuration when two or more axes are connected, therefore, programming to prevent the axes from performing these operations simultaneously will reduce the amount of regenerative energy.

Guideline for Number of External Regenerative Resistors to Be Connected

Vertical installation (motor output [W])	Horizontal installation (motor output [W])	Number of external regenerative resistors
~ 100 W	~ 200 W	0
~ 800 W	~ 1000 W	1
~ 1200 W	~ 1500 W	2
~1600 W	~ 2000 W	3
~ 2000 W	~ 2400 W	4
~ 2400 W	-	5

* Reference conditions applicable to the values in the above table
Actuator series: ISA (400 W max.) or ISP (600 W/750 W)
Stroke: The maximum stroke at which the maximum speed can be output (600 ~ 800 mm depending on the wattage)
Speed: Rated speed Acceleration: 0.3G Load: Rated capacity
Operating condition: Synchronous back-and-forth operation at a duty of 50%
* Up to eight external regenerative resistors can be connected.
* If the operating duty or acceleration/deceleration is high, more regenerative resistors than the number specified in the above table will be required.

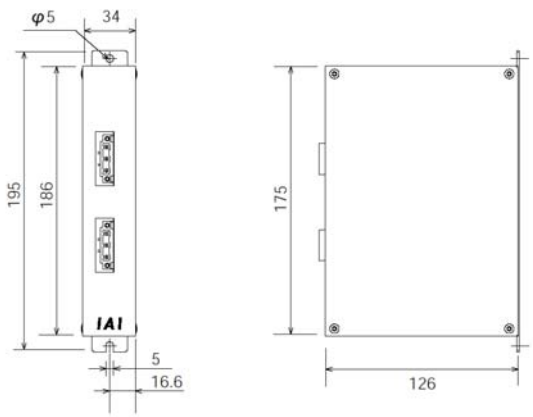

⊙ Synchro Function

1. Common Items (Applicable to both the absolute specification and incremental specification)

Synchro axes consist of a master axis and a slave axis. The axis with the smaller axis number becomes the master axis. A combination of master-axis and slave-axis numbers is set in axis-specific parameter No. 65. The mating synchro axis is set for each axis. (If the axis is not a synchro axis, “0” is set.)

Example) 2-axis controller

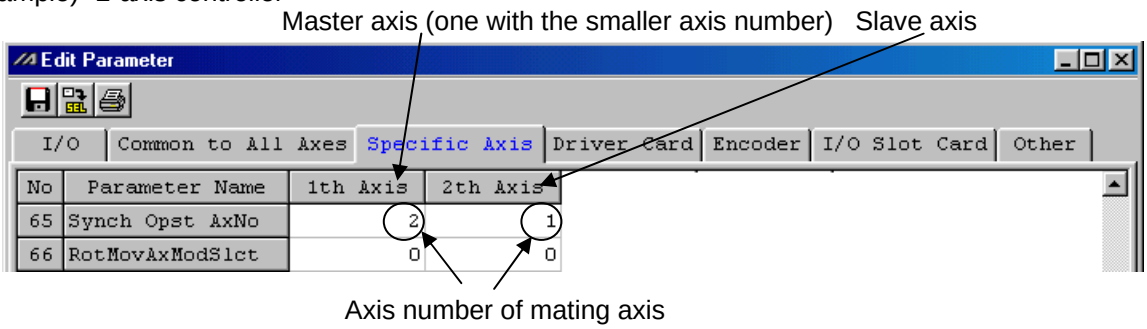

(The settings of other parameters vary partially between the absolute specification and the incremental specification.)

Movement commands in the program are valid only for the master axis. The position data of the slave axis will be ignored.

Only the master axis executes home return (including home return following an absolute reset).

Example)

HOME 1

(Do not perform home return on an absolute controller, except after an absolute reset.)

As a rule, the synchro function must be implemented by coupling the master-axis and slave-axis sliders using a bracket, etc. Consider the relative positioning of the master-axis and slave-axis sliders so that the slave slider will not contact the mechanical ends during home return or full-stroke movement.

2. Incremental Specification

With the incremental specification, the relative positioning of the master-axis and slave-axis sliders remains fixed while the power is on. (If the sliders were moved while the power was turned off, synchro movement will begin from the positions after the movement.)

Absolute reset is not performed on an incremental controller. Home return must be executed at software reset after the power is turned on.

3. Absolute Specification (When both the master axis and slave axis are of the absolute specification)

An absolute reset is performed after the relative positioning of the master axis and slave axis is determined. Even when the sliders were moved while the power was turned off, the positions will be corrected automatically when a servo ON (SVON) command is executed. (The slave slider will move to the displayed coordinate position of the master slider in a fine-drive mode.)

If your controller is of the absolute specification, refer to “◎ Absolute Reset of A Synchro Controller” on the next page.

⊙ Absolute Reset of A Synchro Controller

If you have specified the synchro specification at the time of order, the controller has been shipped with their parameters set for the synchro specification.
To perform an absolute reset, however, the parameters must be changed.
The explanation given below is based on the operation in the PC software. Read the operation manual for the PC software before performing an absolute reset.

1. Synchro Axes

Synchro axes consist of a master axis and a slave axis. The axis with the smaller axis number becomes the master axis.
Program commands are valid only for the master axis (issuance of commands to the slave axis is prohibited).
Absolute reset can be performed using the standard procedure or special procedure. Which procedure to use is determined by the values set for the master axis and slave axis in “Axis-specific parameter No. 38, Encoder ABS/INC type.”

Values in “Axis-specific parameter No. 38, Encoder ABS/INC type”		Absolute reset method
Master axis	Slave axis	
1	1	Special procedure
1	0	Standard procedure
0	0	

(If the master axis and slave axis are both set to “0,” it means both axes are of the incremental specification.)

Example 1) Absolute reset of a 2-axis controller using the special procedure

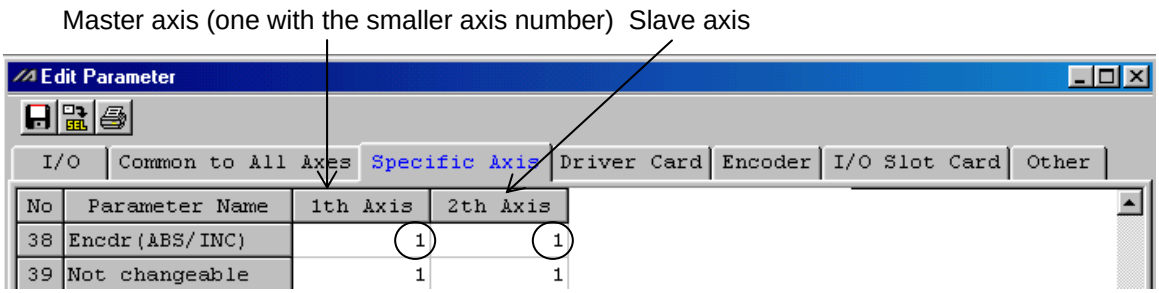

Example 2) Absolute reset of a 2-axis controller using the standard procedure

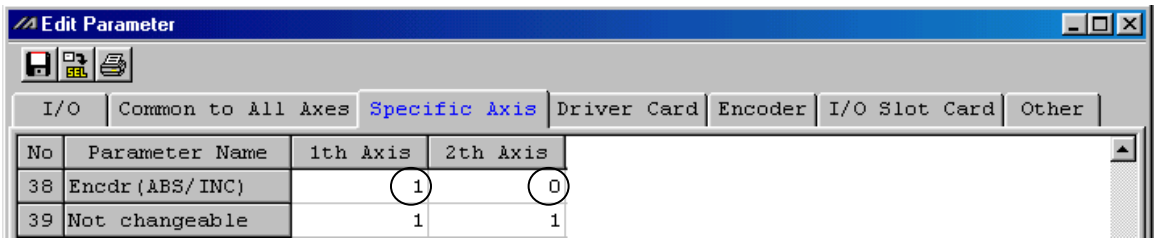

2. Position Adjustment of Synchro-Axis Sliders

The positions of synchro-axis sliders are adjusted (physically adjusted for parallelism).

(1) With the axes and controller not connected by cables (main controller power is off), adjust the relative positioning of the master axis and slave axis and couple the axes.

(2) If position adjustment cannot be performed with the axes and controller not connected by cables (when a brake is equipped, etc.), follow the steps below:

1. Decouple the sliders and connect the axes and controller using cables.
2. Record the values currently set for the master axis and slave axis in “Axis-specific parameter No. 65, Mating synchro-axis number.” (These values will be used to revert the parameters to the original settings in a subsequent process.)
3. Enter “0” for both the master axis and slave axis in “Axis-specific parameter No. 65, Mating synchro-axis number,” in order to temporarily disable the synchro function. Then, select [Transfer to Controller] → [Write to Flash ROM] → [Restart Controller] (software reset).
4. Perform an absolute reset separately for the master axis and slave axis, using the standard procedure.
5. Adjust the relative slider positions via jog operation, etc., and couple the sliders.
6. To enable the synchro function again, enter the values of the master axis and slave axis recorded in step 2 in “Axis-specific parameter No. 65, Mating synchro-axis number.” Then, select [Transfer to Controller] → [Write to Flash ROM] → [Restart Controller] (software reset).

3. Special Absolute-Reset Procedure

When the master axis = 1 and slave axis = 1 in “Axis-specific parameter No. 38, Encoder ABS/INC type”

(1) Record the value currently set for the slave axis in “Axis-specific parameter No. 83, ABS synchro slave-axis coordinate initialization cancellation.”

(This value will be used to revert the parameter to the original setting in a subsequent process.)

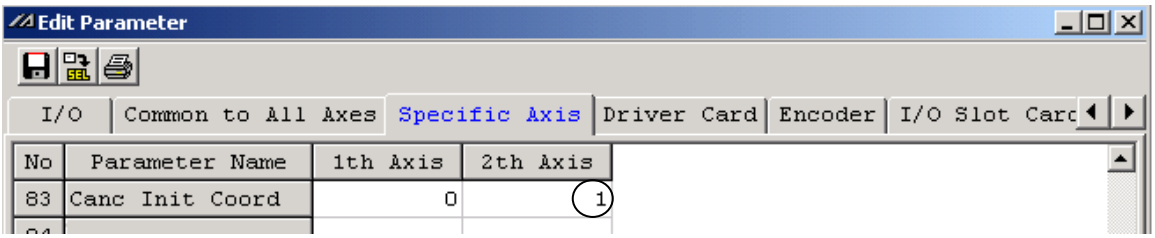

(2) Enter “0” for the slave axis in “Axis-specific parameter No. 83, ABS synchro slave-axis coordinate initialization cancellation.”

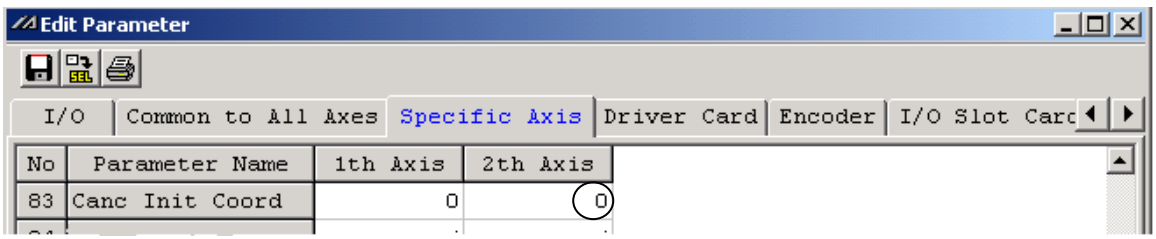

Select [Transfer to Controller] → [Write to Flash ROM] → [Restart Controller] (software reset).

(3) Perform an absolute reset using the special procedure (forced reset by ignoring the on-screen instructions) as explained below:

1. Perform “Encoder Rotation Data Reset 1” for the slave axis.

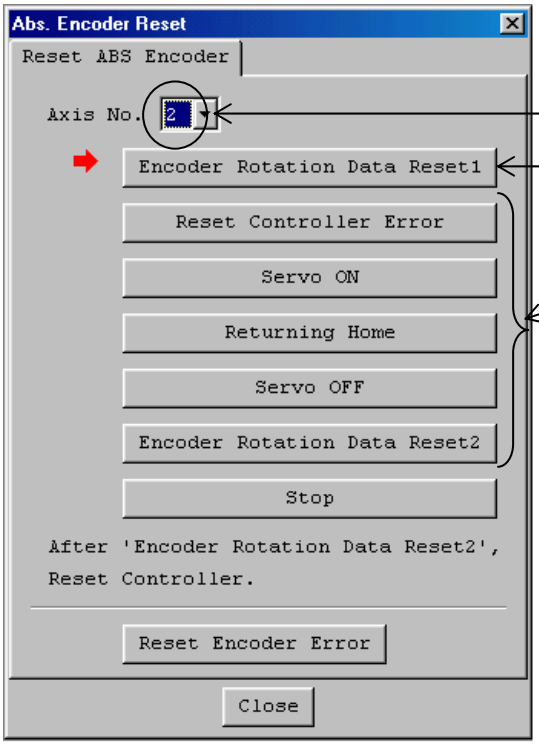

Select the axis number of the slave axis.

Click [Encoder Rotation Data Reset 1].
A series of warning windows will be displayed. Click [Yes] on all windows.

Do not click [Reset Controller Error] and subsequent buttons.

2. Perform “Encoder Rotation Data Reset 1” through “Encoder Rotation Data Reset 2” for the master axis by following the on-screen instructions.

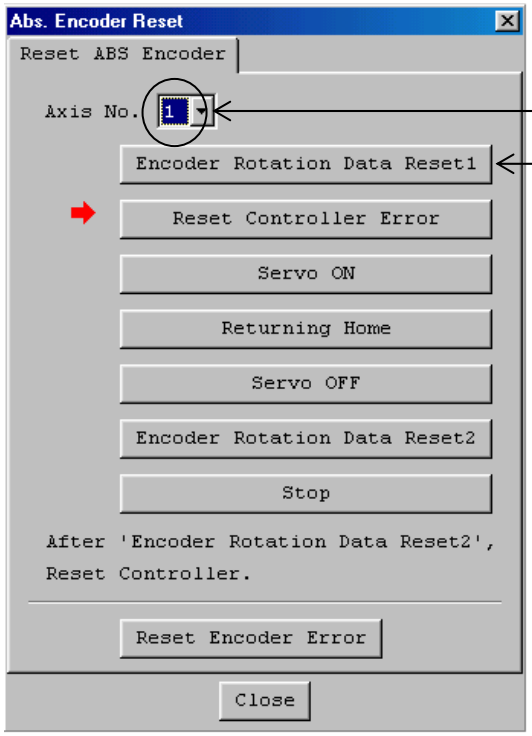

Select the axis number of the master axis.

Click [Encoder Rotation Data Reset 1].
A series of warning windows will be displayed. Click [Yes] on all windows.

Follow the on-screen instructions to complete [Reset Controller Error] through [Encoder Rotation Data Reset 2].

3. Perform step 1, “Encoder Rotation Data Reset 1” for the slave axis, again.
Perform the same operation in step 1 and then click [Close].

(4) Enter the value of the slave axis recorded in (1) in “Axis-specific parameter No. 83, ABS synchro slave-axis coordinate initialization cancellation.”

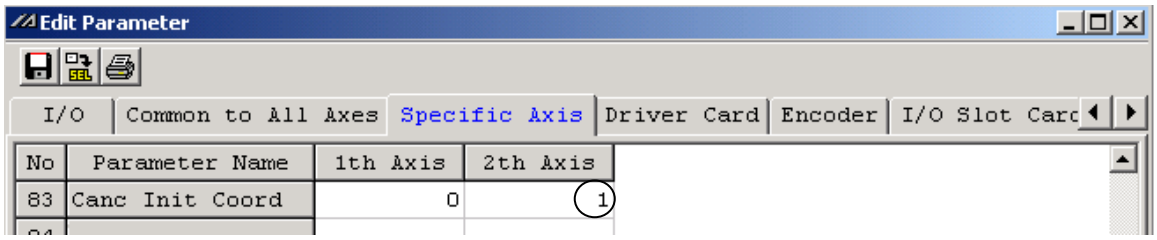

→ Select [Transfer to Controller] → [Write to Flash ROM] → [Restart Controller] (software reset).

(5) Set home preset values and align the master-axis and slave-axis coordinates.

1. If the controller’s 7-segment LED display shows “rdy,” read the current positions of the master axis and slave axis displayed on the screen with the servo turned off.
   (If an “Error No. C74, Actual-position soft limit over error” generates, reset the error. Once “rdy” is displayed, you can read the current positions.)

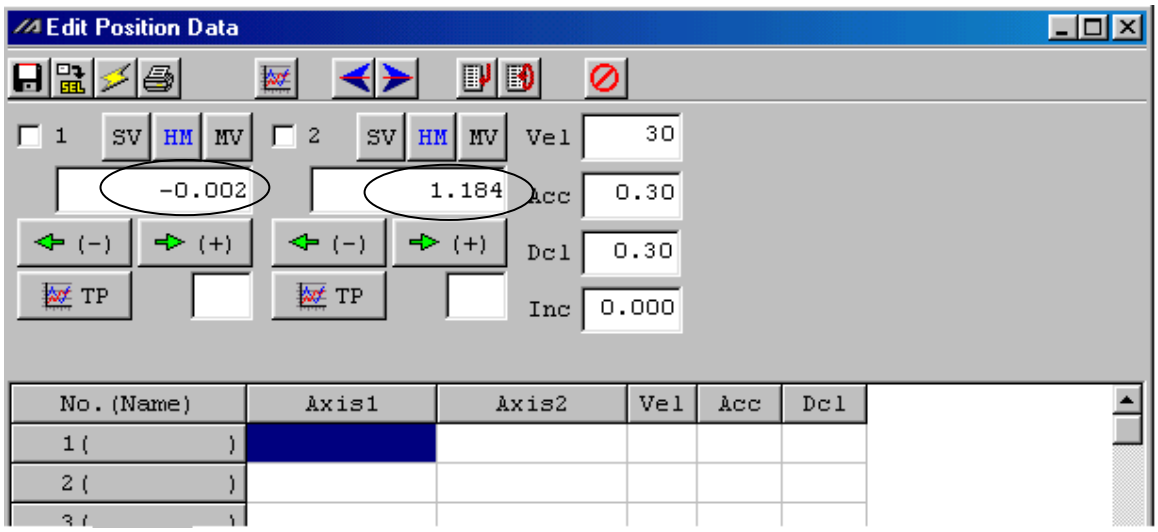

* If the servo is turned on in this stage, an “Error No. D0A, Driver overload error,” “Error No. C6B, Deviation overflow error,” “Error No. CA5, Stop-deviation overflow error” or other error may generate.

2. Perform the following calculation.
   Slave-axis value in “Axis-specific parameter No. 12, Home preset value” [0.001 mm] + ((Displayed current position of master axis [mm] – Displayed current position of slave axis [mm]) x 1000)

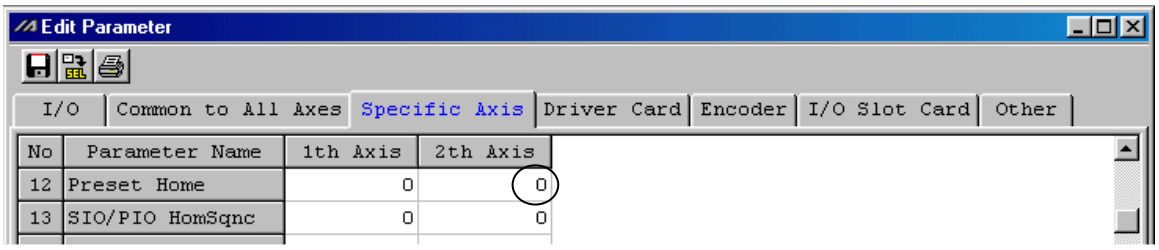

In this example, the above formula is rewritten as follows:
0 + ((-0.002 – 1.184) X 1000) = -1186

3. Enter the calculation result obtained in step 2 above in the slave-axis field of “Axis-specific parameter No. 12, Home preset value.”

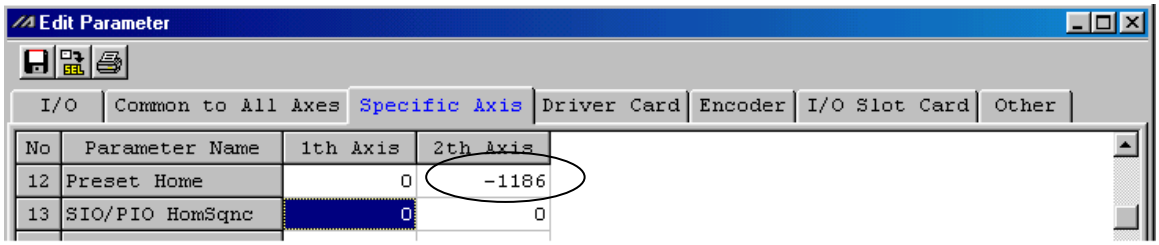

→ Select [Transfer to Controller] → [Write to Flash ROM] → [Restart Controller] (software reset).

(6) Turn on the servo and check the operation in the jog mode (operate the master axis).

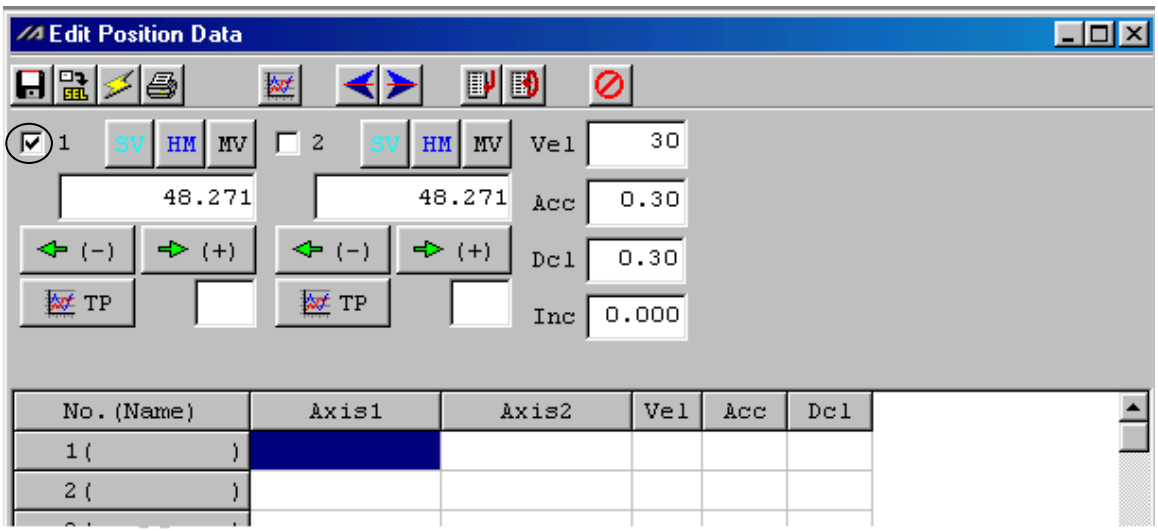

If an “Error No. D0A, Driver overload error,” “Error No. C6B, Deviation overflow error,” “Error No. CA5, Stop-deviation overflow error” or other error generates, check the following items:

- If the current position of the master axis deviates significantly from that of the slave axis, the setting in (5) may be incorrect.
- Check the following parameters to confirm that the required fields are properly filled or changed:
  “Axis-specific parameter No. 65, Mating synchro-axis number”
  “Axis-specific parameter No. 83, ABS synchro slave-axis coordinate initialization cancellation”
- Check to see if the slider movements are restricted.

4. Standard Absolute-Reset Procedure

When the master axis = 1 and slave axis = 0 in “Axis-specific parameter No. 38, Encoder ABS/INC type”

After completing 2, “Position Adjustment of Synchro-Axis Sliders,” perform an absolute reset for the master axis only. For the operation procedure, refer to the operation manual for the X-SEL Controller or PC software.

Note) A synchro axis that has been reset by the standard procedure is unable to correct any positional shift that may have occurred while the power was turned off, after the servo is turned on.

5. Notes on Use of the Synchro Function

- As a rule, the synchro function must be implemented by coupling the master-axis and slave-axis sliders using a bracket, etc.
- If the current position of the master axis is not aligned with that of the slave axis when the servo is turned on, correction will be made automatically via fine-pitch movement. (The slave-axis slider will move to the displayed coordinate position of the master-axis slider in a fine-drive mode.)
- The function to detect any positional shift that occurred while the power was turned off and correct it after the servo is turned on may not be available depending on the model.
  (This function is enabled if the controller was ordered as a synchro specification and “1” is set for both the master axis and slave axis in “Axis-specific parameter No. 38, Encoder ABS/INC type.”)
- With a system subject to a relatively large positional shift while the servo power is turned off, after turning on the servo obtain the current positions of the master axis and slave axis using a PRDQ command, wait for the distance between the current position of the slave axis and that of the master axis to be reduced to ±0.3 mm or less, and then issue operation commands. (See the reference program below.)
- Reference program
  This program reads the current positions of the master axis and slave axis after the servo is turned on, and turns ON global flag 600 when the distance between the two axes becomes 0.3 mm or less. Operation commands are written so that they will be executed after 600 is turned ON.

SVON	1		Turn on the servos of the synchro axes.
BTOF	600		Turn OFF flag 600.
LET	100	1.000	Assign 1 (or any value larger than 0.2) to variable 100.
DWGT	100	0.300	End the loop when the value in variable 100 becomes 0.3 or less (= when the distance between the master axis and the slave axis becomes 0.3 mm or less).
PRDQ	1	100	Assign the current position of the master axis to variable 100.
PRDQ	2	101	Assign the current position of the slave axis to variable 101.
SUB	100	*101	Subtract the value in variable 101 from the value in variable 100.
IFLT	100	0.000	If the result is a negative value,
MULT	100	-1.000	Multiply the result by –1 to convert it to a positive value.
EDIF			
EDDO			
BTON	600		Turn ON flag 600.
EXIT			

⊙ Multiple-Slider Near-Miss Detection (Collision Prevention) Function

* Applicable versions: X-SEL-PQ controllers of main application version 0.51 or later
Teaching pendant main application (IA-T-X, IA-T-XD) version 1.41 or later
Teaching pendant main application (IA-T-X) version 1.31 or later
PC software (IA-101-X-**) version 7.0.1.0 or later

When multiple sliders are used, this function prevents jogging or positioning axes from colliding with one other. The following parameters are set to detect near-miss situations among multiple sliders.

Setting method

[1] Set the mating axis number for each axis in axis-specific parameter No. 104, “Target axis specification for multiple-slider near-miss detection.”
Example 1: 2-axis controller
Set the mating axis number for each axis. (The example below assumes that an interlocked slider exists on the positive side of the coordinate system of the target axis)

I/O | 全軸共通 | 軸別 | ﾄﾞﾗｲﾊﾞ | ｴﾝｺｰﾀﾞ | I/O系ﾃﾞﾊﾞｲｽ | その他

No	ﾊﾟﾗﾒｰﾀ名	1軸目	2軸目
104	ﾏﾙﾁｽﾗｲﾀﾞ過接近検出対象軸指定	2h	1h

Example 2: When an interlocked slider exists on the negative side of the coordinate system of the target axis (Axis 2 is on the negative side)

I/O | 全軸共通 | 軸別 | ﾄﾞﾗｲﾊﾞ | ｴﾝｺｰﾀﾞ | I/O系ﾃﾞﾊﾞｲｽ | その他

No	ﾊﾟﾗﾒｰﾀ名	1軸目	2軸目
104	ﾏﾙﾁｽﾗｲﾀﾞ過接近検出対象軸指定	2h	10h

[2] Set the effective stroke in axis-specific parameter No. 105, “Effective stroke of multiple sliders.” (The example below assumes a stroke of 1140.)

I/O | 全軸共通 | 軸別 | ﾄﾞﾗｲﾊﾞ | ｴﾝｺｰﾀﾞ | I/O系ﾃﾞﾊﾞｲｽ | その他

No	ﾊﾟﾗﾒｰﾀ名	1軸目	2軸目
105	ﾏﾙﾁｽﾗｲﾀﾞ有効ｽﾄﾛｰｸ[0.001mm]	1140000	1140000

(Note 1) The multiple-slider near-miss detection (collision prevention) function is enabled only when coordinates of two target axes (mating axes) are confirmed. This function is disabled if an encoder error is present or when home return is not yet completed on an incremental-encoder controller.

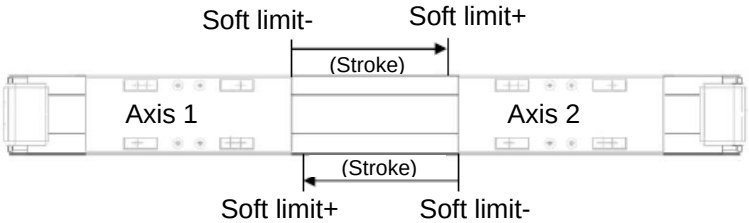

After a near-miss situation is detected, the following errors will generate:
Error No. 422, “Multiple-slider command position near-miss error” (Emergency deceleration will be triggered to stop the sliders, after which the servo will be turned off.)
Error No. 423, “Multiple-slider actual position near-miss error” (Emergency deceleration will be triggered to stop the sliders, after which the servo will be turned off.)
Following a near-miss detection, pull the sliders out of their near-miss positions via jogging, etc.
(The sliders can be jogged in pull-out directions.)

Related Parameters (Axis-specific Parameters)

No.	Parameter name	Default value	Input range	Unit	Remarks
104	Target axis specification for multiple-slider near-miss detection	0H	0H ~ FFFFFFFFH		Bits 0 to 3: Mating axis number of near-miss detection target (on the positive side of the coordinate system of the target axis) Bits 4 to 7: Mating axis number of near-miss detection target (on the negative side of the coordinate system of the target axis) * The mating axis must be entered for each axis. (Of the pair, the axis with the smaller axis number becomes the main axis for the sake of convenience.) * For each axis, only an axis whose resolution and other related characteristics are the same can be specified as a mating axis. * In the case of synchro axes, always specify the synchro master axis. (Specification of the synchro slave axis is prohibited.) * Specify “0” if no adjacent slider is present on the applicable side of the coordinate system of the target axis.
105	Effective stroke of multiple sliders	0	0 ~ 99999999	0.001 mm	Effective stroke from the “soft limit” at the end (far end) of the operation range of either axis specified as a target axis for multiple-slider near-miss detection (Of the multiple sliders, only the parameter for the master axis is valid.) * The “soft limit” for each axis must be set correctly to prevent physical slider interference at the far end. (This soft limit is used as a standard for near-miss detection calculation.)
106	Emergency deceleration margin upon multiple-slider near-miss detection	5	0 ~ 999	0.01 G	
107	Multiple-slider setting: Bit pattern 1	12H	0H ~ FFFFFFFFH		Bits 0 to 3: Margin for multiple-slider actual position near-miss detection (mm) (Of the multiple sliders, only the parameter for the master axis is valid.) Bits 4 to 7: Margin for multiple-slider command position near-miss detection (mm) (Of the multiple sliders, only the parameter for the master axis is valid.)

⊙ General-Purpose RS232 (2-Channel RS232 Unit)

(1) Specifications
The 2-channel RS232 unit is a dedicated D-sub, 9-pin RS232 interface. This unit can be used when a general-purpose RS232 device is connected.

RS232 Connector Specifications

Item	Overview			Details
Applicable connector	D-sub, 9-pin connector (DTE)			XM2C-0942-502L (OMRON)
Connector name	S1/S2			
Maximum connection distance	10M			At 38400 bps
Applicable interface standard	RS232			
Connected unit	AT-compatible PC, etc.			Half-duplex communication
Connection cable				PC-AT standard 232C cross-cable
Terminal assignments	1	in	(CD)	(Carrier detection: Not used)
	2	in	RD	Received data (RXD)
	3	Out	SD	Transmitted data (TXD)
	4	Out	ER	Equipment ready (DTR)
	5	in	SG	Signal ground
	6	in	DR	Data set ready (DSR)
	7	Out	(RS)	(Request to send (RTS): Not used)
	8	in	(CS)	(Clear to send (CTS): Not used)
	9		NC	Not used

(2) Communication Cable
RC232 wiring
Flow controls (software flow controls or hardware flow controls) are not implemented.
If the other side does not implement flow controls, either, a commercial RS232 cross cable can be used.

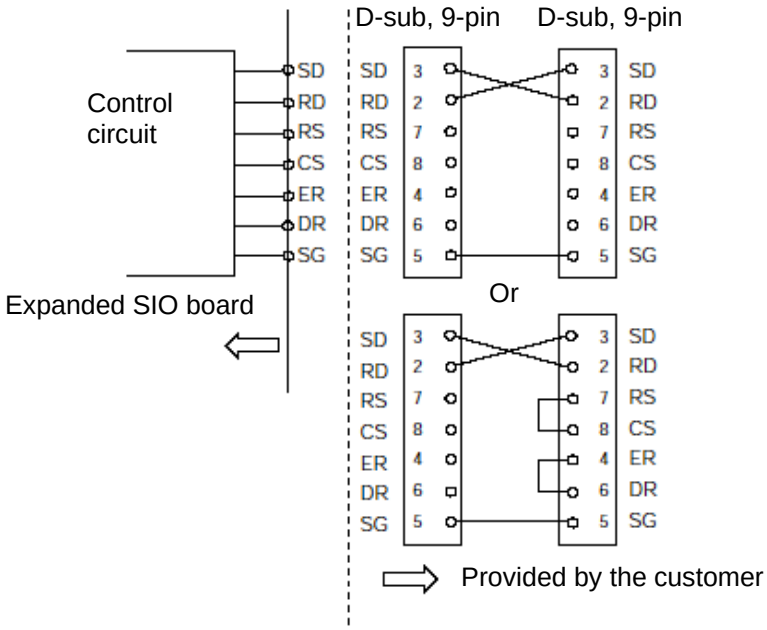

(3) Parameter Settings
The SIO channel numbers and specifications are set as follows based on the factory settings for applicable parameters:

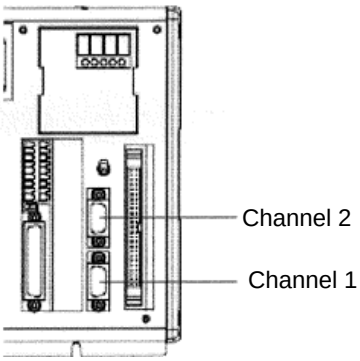

Specifications
Baud rate: 38.4 kbps
Data length: 8
Stop bit: 1
Parity type: None
Communication mode: RS232

The details are set based on the following parameters:
Channel 1 → I/O parameter Nos. 201 to 203
Channel 2 → I/O parameter Nos. 213 to 215

I/O Parameter Settings (Reference)

No.	Parameter name	Default value	Input range	Unit
201	Attribute 1 of SIO channel 1 opened to user (standard mount)	28100001H	0H ~ FFFFFFFFH	None
213	Attribute 1 of SIO channel 2 opened to user (standard mount)	28100001H	0H ~ FFFFFFFFH	None

Bits 28 to 31: Baud rate type (0: 9.6 1: 19.2 2: 38.4 3: 57.6 4: 76.8 5: 115.2 kbps)
Bits 24 to 27: Data length (7 to 8)
Bits 20 to 23: Stop bit length (1 to 2)
Bits 16 to 19: Parity type (0: None, 1: Odd, 2: Even)
Bits 12 to 15: For future expansion
Bits 8 to 11: For future expansion
Bits 4 to 7: For future expansion
Bits 0 to 3: Use selection (0: Do not use, 1: Use)

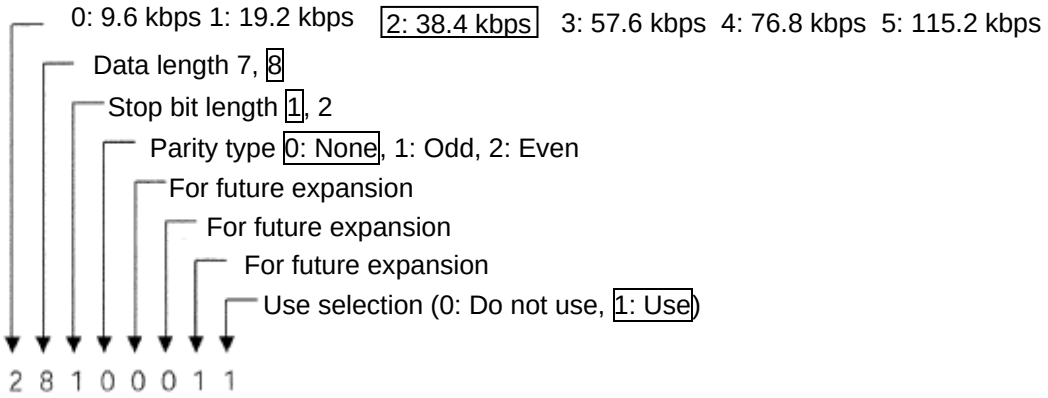

No.	Parameter name	Default value	Input range	Unit
202	Attribute 2 of SIO channel 1 opened to user (standard mount)	00000001H	0H ~ FFFFFFFFH	None
214	Attribute 2 of SIO channel 2 opened to user (standard mount)	00000001H	0H ~ FFFFFFFFH	None

- Settings

  Bits 28 to 31: For future expansion
  Bits 24 to 27: For future expansion
  Bits 20 to 23: For future expansion
  Bits 16 to 19: Character transmission interval (msec)
  Bits 12 to 15: Communication method (0: Full-duplex, 1: Half-duplex)
  Bits 8 to 11: Send operation type in half-duplex communication
  (0: Do not check CTS-ON at send,
  1: Check CTS-ON at send)
  Bits 0 to 3: Minimum delay for receive → send switching in half-duplex communication (msec)

No.	Parameter name	Default value	Input range	Unit
203	Attribute 3 of SIO channel 1 opened to user (standard mount)	01118040H	0H ~ FFFFFFFFH	None
215	Attribute 3 of SIO channel 2 opened to user (standard mount)	01118040H	0H ~ FFFFFFFFH	None

- Settings

  Bits 28 to 31: Flow control type
  (0: None, 1: Xon/Xoff, 2: Hardware)
  * Valid only in full-duplex communication.
  * If flow control is performed, select 38.4 kbps or below. Use of a higher baud rate may generate an overrun error, etc.

  Bits 24 to 27: Xon send selection when send is enabled after SIO-CPU reset
  (0: Do not send, 1: Send)
  * Valid only in full-duplex communication with Xon/Xoff flow control.

  Bits 20 to 23: Send enable selection at port open
  (0: Disable, 1: Enable)
  * Valid only in full-duplex communication with Xon/Xoff flow control.

  Bits 16 to 19: Xon/Xoff send selection at port close
  (0: Do not send, 1: Send Xon, 2: Send Xoff)
  * Valid only in full-duplex communication with Xon/Xoff flow control.

  Bits 8 to 15: Flow control high limit (bytes)
  Bits 0 to 7: Flow control low limit (bytes)
  * If values are set to a magnitude correlation of “Flow control low limit ≥ SCI receive buffer size - Flow control high limit,” both the flow control high/low limits will be converted to a value corresponding to one-fourth the SCI receive buffer size.

(4) Programs

[1] String processing commands

A string refers to a character string. This controller uses global strings and local strings. Global strings are common strings that can be read or written from any program. Local strings are valid only in the program in which the applicable string is specified and cannot be used in any other program. For differentiation, both strings are assigned a number in a different range.
Global strings: 300 to 999 (700)
Local strings: 1 to 299 (299)
As a need for string commands, normally these commands are used in serial communication with external equipment.
Serial communication data must be processed as strings. This controller can handle serial communication. In serial communication, strings must be compared, moved and/or converted. This controller provides a range of commands to perform these tasks.

[2] Explanation of transmission format

Basically communication using this system is implemented in the form of exchanging character strings.
Specific operations are assigned to these character strings in advance, so that the receiving side can recognize each character string and perform the corresponding operation.
A combination of character strings and characters indicating the end of a character string is called “transmission format,” and the user can determine a desired transmission format.
For example, the user can specify a four-character string “HOME” to indicate a home return command. Although the user can also determine a desired character to indicate the end of a character string, the characters specified on the PC side, such as “CR” and “LF,” must be followed instead.

Example of transmission format

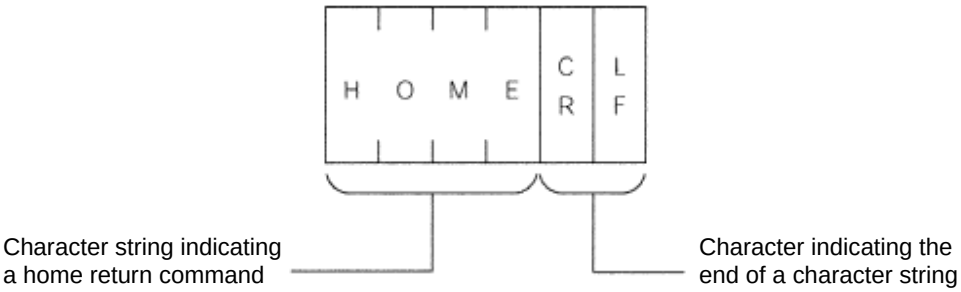

[3] Explanation of strings

Characters sent per the aforementioned transmission format are stored in a “string,” which, simply put, is a dedicated container for characters.
Strings are divided into global strings that can be read or written in all programs, and local strings that can be read or written only in each program in which the applicable string is specified. For differentiation, both strings are assigned a column number in a different range.

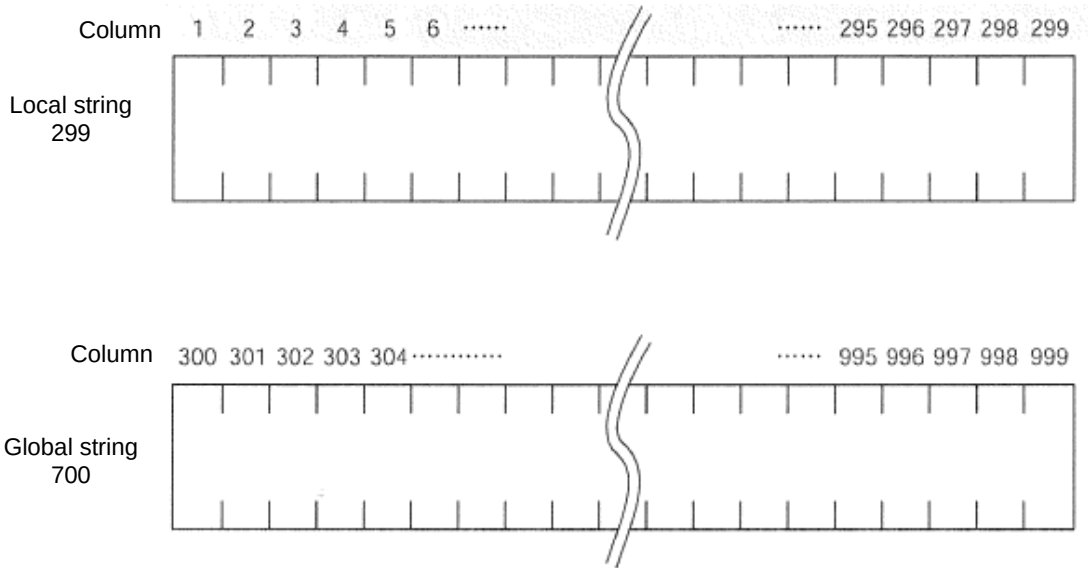

One character is stored in each column comprising a string.
Positions of fields in a string are indicated by column numbers, and which columns are used to store a given set of characters can be set freely using a command.
For example, if a character string “HOME” indicating a home return command is to be sent from the PC for use in multiple programs, “HOME” must be specified for storage in columns starting from 300.

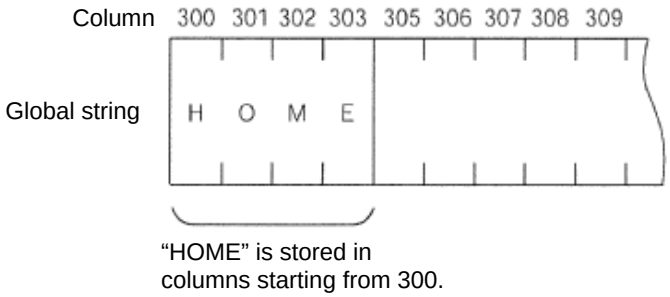

[4] Determination of transmission format
In this example of application program, three types of transmission formats are used including home return command, movement command and movement completion. These formats are determined as specified below.
Take note that these are only examples and the user can determine each format freely.

A. Home return command format
This format is used to command the controller, from the PC, to perform home return.

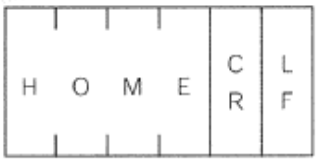

B. Movement command format
This format is used to command the controller, from the PC, to move axes.

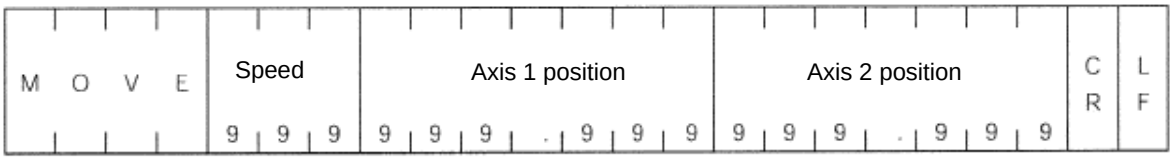

C. Movement completion format
This format is sent from the controller to the PC when the specified home return or movement has completed.

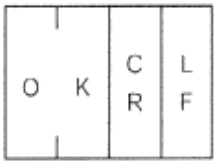

[5] Processing procedure

The processing procedure to be followed when programming this application example is explained below:

A. Set “LF” as a character indicating the end of a character string (terminator character).
B. Open channel 1 of the RS232 unit so that this channel can be used.
C. Data sent to channel 1 is received into a local string starting from column 1.
D. If the received data was “MOVE,” the speed data is converted to a binary value and the converted value is set in variable 10, while the position data is also converted to a binary value and the converted value is set in position No. 1. Thereafter, the movement is carried out and after the movement has completed, “OK” is sent.

[6] Application program

STEP	No.	N	OP-CODE	OPRND1	OPRND2	POST	Comment
1			SCHA	10			Set LF as a terminator character.
2			OPEN	1			Open SIO channel 1.
3			TAG	1			
4			READ	1	1		Read SIO1 columns from 1.
5							
6			ISEQ	1	'HOME'		Home return command
7			HOME	11			Perform home return.
8			EXSR	1			Send “OK.”
9			EDIF				
10							
11			ISEQ	1	'MOVE'		If the received data was a movement command:
12			SLEN	3			Set the length to 3 digits.
13			VAL	10	5		Speed → Variable 10
14			VEL	*10			Set the speed.
15							
16			PCLR	1	1		Clear position 1.
17			SLEN	3.3			
18			VAL	199	8		Axis 1 position → Variable 199
19			PPUT	1	1		Set the axis 1 data.
20							
21			VAL	199	15		Axis 2 position → Variable 199
22			PPUT	2	1		Set the axis 2 data.
23			MOVL	1			Carry out the movement.
24			EXSR	1			Send “OK.”
25			EDIF				
26							
27			GOTO	1			
28							----------
29			BGSR	1			OK send subroutine
30			SCPY	1	'OK'		Set “OK.”
31			SPUT	3	13		Set “CR.”
32			SPUT	4	10		Set “LF.”
33			WRIT	1	1		Send.
34			EDSR				

⊙ List of Parameters

If you have any question regarding changing the parameters, please contact IAI's Sales Engineering Section. After changing a parameter, record the new and old parameter settings.

If you have purchased the PC software, we recommend that you back up the parameters immediately after the controller is delivered and when the system incorporating the controller is started. Since a number of customizing settings use parameters, you should back up the parameters regularly as you back up the programs.
To make the new parameters effective, write them to the flash ROM and then execute a software reset or reconnect the power.
The lists below are examples of default values displayed on the PC software. The default parameter settings vary depending on the operating condition and actuators used.

The values in the "Input range" column represent input limitations on the teaching pendant or in PC software. For the actual settings, enter the values defined in the "Remarks" column.
Values other than those defined in the "Remarks" column are for future expansion, even when they are inside the input range.
Therefore, do not enter values other than those defined in the "Remarks" column.

1. I/O Parameters

No.	Parameter name	Default value (Reference)	Input range	Unit	Remarks
1	I/O port assignment type	1	0 ~ 20		0: Fixed assignment 1: Automatic assignment (Priority: Network I/F module → Slot 1 (standard I/O) ~; * Ports are assigned only for the installed adjoining slots, starting from slot 1 = For safety reasons)
2	Input port start number with fixed standard I/O assignments (I/O1)	000	-1 ~ 599		0 + (Multiple of 8) (Invalid if a negative value is set)
3	Output port start number with fixed standard I/O assignments (I/O1)	300	-1 ~ 599		300 + (Multiple of 8) (Invalid if a negative value is set)
4	Input port start number with fixed expanded I/O1 assignments (I/O2)	-1	-1 ~ 599		0 + (Multiple of 8) (Invalid if a negative value is set) (Slot next to the standard I/O slot)
5	Output port start number with fixed expanded I/O1 assignments (I/O2)	-1	-1 ~ 599		300 + (Multiple of 8) (Invalid if a negative value is set)
6	Input port start number with fixed expanded I/O2 assignments (I/O3)	-1	-1 ~ 599		0 + (Multiple of 8) (Invalid if a negative value is set)
7	Output port start number with fixed expanded I/O2 assignments (I/O3)	-1	-1 ~ 599		300 + (Multiple of 8) (Invalid if a negative value is set)
8	Input port start number with fixed expanded I/O3 assignments (I/O4)	-1	-1 ~ 599		0 + (Multiple of 8) (Invalid if a negative value is set)
9	Output port start number with fixed expanded I/O3 assignments (I/O4)	-1	-1 ~ 599		300 + (Multiple of 8) (Invalid if a negative value is set)
10	Standard I/O error monitor (I/O1)	1	0 ~ 5		0: Do not monitor 1: Monitor 2: Monitor (Do not monitor errors relating to 24-V I/O power source) 3: Monitor (Monitor only errors relating to 24-V I/O power source) * Some exceptions apply.
11	Expanded I/O1 error monitor (I/O2)	1	0 ~ 5		0: Do not monitor 1: Monitor 2: Monitor (Do not monitor errors relating to 24-V I/O power source) 3: Monitor (Monitor only errors relating to 24-V I/O power source) * Some exceptions apply. (Slot next to the standard I/O slot)
12	Expanded I/O2 error monitor (I/O3)	1	0 ~ 5		0: Do not monitor 1: Monitor 2: Monitor (Do not monitor errors relating to 24-V I/O power source) 3: Monitor (Monitor only errors relating to 24-V I/O power source) * Some exceptions apply.
13	Expanded I/O3 error monitor (I/O4)	1	0 ~ 5		0: Do not monitor 1: Monitor 2: Monitor (Do not monitor errors relating to 24-V I/O power source) 3: Monitor (Monitor only errors relating to 24-V I/O power source) * Some exceptions apply.
14	Number of network I/F module remote input ports used	0	0 ~ 256		Multiple of 8
15	Number of network I/F module remote output ports used	0	0 ~ 256		Multiple of 8
16	Starting input port number based on fixed network I/F module assignments	-1	-1 ~ 599		0 + (Multiple of 8) (Invalid if a negative value is set)
17	Starting output port number based on fixed network I/F module assignments	-1	-1 ~ 599		300 + (Multiple of 8) (Invalid if a negative value is set)

I/O Parameters

No.	Parameter name	Default value (Reference)	Input range	Unit	Remarks
18	Network I/F module error monitor	1	0 ~ 5		0: Do not monitor 1: Monitor * Some exceptions apply.
19	(For expansion)	0			
20	Input filtering periods	2	1 ~ 9	msec	Input signal is recognized when the status is held for twice the period set by this parameter.
21	For future expansion (change prohibited)	0	1 ~ 9		
22	Remote-I/O-card fieldbus ready timeout value	2000	0 ~ 99999	msec	Timeout check is not performed if “0” is set.
23	Overcurrent/power-supply error detection input specification for multi-point DIO external terminal block	0H	0H ~ FFFFFFFFH		Bits 0 to 3: Standard I/O (I/O1) input specification Bits 4 to 7: Expanded I/O1 (I/O2) input specification Bits 8 to 11: Expanded I/O2 (I/O3) input specification Bits 12 to 15: Expanded I/O3 (I/O4) input specification (0: Do not use error detection input 1: Use error detection input = IN023 on card 2: Use error detection input = IN047 on card 3: Use error detection input = IN023/47 on card) * Determine an appropriate setting after checking the specification of the multi-point DIO terminal block unit to be connected. * The input port used for the error detection input cannot be used as a general-purpose input port.
24	I/O setting bit pattern 1 (global specification)	10000H	0H ~ FFFFFFFFH		Bits 0 to 3: RDY OUT function selection (System IO) (0: SYSRDY (Software = PIO trigger program can be run) and hardware is normal (emergency stop has not been actuated and hardware error is not present) 1: Error of operation-cancellation level or higher is not present 2: Error of cold-start level or higher is not present) Bits 4 to 7: RDY LED function selection (0: Program can be run 1: Error of operation-cancellation level or higher is not present 2: Error of cold-start level or higher is not present) Bits 8 to 11: DET (MELT) (drive-source cutoff relay fused) signal enable/disable selection (0: Disable, 1: Enable) Bits 12 to 15: Drive-source cutoff relay DET (MELT) error level (when voltage drop cannot be checked) (0: Cold start, 1: Message) Bits 16 to 19: Drive-source cutoff relay DET (MELT) error level (when voltage drop is checked) (0: Cold start, 1: Message)
25	I/O setting bit pattern 2 (global specification)	0H	0H ~ FFFFFFFFH		Bits 0 to 3: For future expansion Bits 4 to 7: For future expansion
26 ~ 28	(For expansion)	0			
29	Drive-source cutoff (SDN) notification physical output port number	0	0 ~ 599		Output port OFF at drive-source cutoff (* Important: This output is used only for notification by software) (Invalid if “0” is set) (Main application version 0.13 or later) * Note: Enter a hexadecimal value if a tool (PC/TP) of a version in which “h” is displayed in the input area is used.

I/O Parameters

No.	Parameter name	Default value (Reference)	Input range	Unit	Remarks
30	Input function selection 000	1	0 ~ 5		0: General-purpose input 1: Program start signal (ON edge) (007 to 013: BCD-specified program number) 2: Program start signal (ON edge) (007 to 013: Binary-specified program number) * If this parameter is used as a program start signal, turn ON the signal for at least 100 msec so that the program will start without fail.
31	Input function selection 001	0	0 ~ 5		0: General-purpose input 1: Software reset signal (1 second ON) * If continued operation is specified as the action upon emergency stop, enable the software reset signal (to provide a means of canceling the operation).
32	Input function selection 002	0	0 ~ 5		0: General-purpose input 1: Servo ON * ON edge: Equivalent to the all-valid-axis servo ON command, OFF edge: Equivalent to the all-valid-axis servo OFF command (A minimum interval of 1.5 seconds is required) (Must be executed in non-operating condition)
33	Input function selection 003	1	0 ~ 5		0: General-purpose input 1: General-purpose input (Start the auto-start program upon power-ON reset/software reset in the AUTO mode) 2: Auto-start program start signal (ON edge: Start, OFF edge: Abort all operations/programs (excluding the I/O processing program at operation/program abort)) * If this parameter is used as an auto-start program start signal, turn ON the signal for at least 100 msec so that the program will start without fail.
34	Input function selection 004	0	0 ~ 5		0: General-purpose input 1: All servo axis soft interlock (OFF level) (Valid for all commands other than the servo OFF command) (Operation is held upon interlock actuation during automatic operation; operation is terminated upon interlock in non-AUTO mode)
35	Input function selection 005	0	0 ~ 5		0: General-purpose input, 1: Operation-pause reset signal (ON edge)
36	Input function selection 006	0	0 ~ 5		0: General-purpose input 1: Operation-pause reset signal (OFF level) (Valid only during automatic operation) * Cancel pause when an operation-pause reset signal is received.
37	Input function selection 007	1	0 ~ 5		0: General-purpose input, 1: Program number specified for program start (least significant bit)
38	Input function selection 008	1	0 ~ 5		0: General-purpose input, 1: Program number specified for program start
39	Input function selection 009	1	0 ~ 5		0: General-purpose input, 1: Program number specified for program start
40	Input function selection 010	1	0 ~ 5		0: General-purpose input, 1: Program number specified for program start
41	Input function selection 011	1	0 ~ 5		0: General-purpose input, 1: Program number specified for program start
42	Input function selection 012	1	0 ~ 5		0: General-purpose input, 1: Program number specified for program start
43	Input function selection 013	1	0 ~ 5		0: General-purpose input 1: Program number specified for program start 2: Error reset (ON edge)
44	Input function selection 014	0	0 ~ 5		0: General-purpose input (Cancel cutoff when the drive-source cutoff factor is removed) 1: Drive-source cutoff reset input (ON edge) (Valid when the factor has been removed) * Drive-source cutoff reset control is not available for axes whose motor-drive power unit is not housed inside this controller or whose drive-source cutoff circuit is not controlled by this controller.
45	Input function selection 015	0	0 ~ 5		0: General-purpose input 1: Home return of all valid axes (ON edge) (Servo ON must be executed first = I/O parameter No. 32, Axis-specific parameter No. 13) 2: Home return of all valid incremental axes (ON edge) (Servo ON must be executed first = I/O parameter No. 32, Axis-specific parameter No. 13)

I/O Parameters

No.	Parameter name	Default value (Reference)	Input range	Unit	Remarks
46	Output function selection 300	2	0 ~ 20		0: General-purpose output 1: Output error of operation-cancellation level or higher (ON) 2: Output error of operation-cancellation level or higher (OFF) 3: Output error of operation-cancellation level or higher + emergency stop (ON) 4: Output error of operation-cancellation level or higher + emergency stop (OFF)
47	Output function selection 301	3	0 ~ 20		0: General-purpose output 1: READY output (PIO trigger program can be run) 2: READY output (PIO trigger program can be run and error of operation-cancellation level or higher is not present) 3: READY output (PIO trigger program can be run and error of cold-start level or higher is not present)
48	Output function selection 302	2	0 ~ 20		0: General-purpose output 1: Emergency-stop output (ON) 2: Emergency-stop output (OFF)
49	Output function selection 303	0	0 ~ 5		0: General-purpose output 1: AUTO mode output 2: Output during automatic operation (Other parameter No. 12)
50	Output function selection 304	0	0 ~ 5		0: General-purpose output 1: Output if all valid axes are at home (= 0) 2: Output if all valid axes completed home return (coordinates are confirmed) 3: Output if all valid axes are at preset home coordinates * To move an absolute-encoder axis to coordinates 0 or the preset home coordinates, use a MOVP command instead of a HOME command.
51	Output function selection 305	0	0 ~ 5		0: General-purpose output 1: For future expansion 2: Output when axis-1 servo is ON (System monitor task output) 3: For future expansion
52	Output function selection 306	0	0 ~ 5		0: General-purpose output 1: For future expansion 2: Output when axis-2 servo is ON (System monitor task output) 3: For future expansion
53	Output function selection 307	0	0 ~ 5		0: General-purpose output 1: For future expansion 2: Output when axis-3 servo is ON (System monitor task output) 3: For future expansion
54	Output function selection 308	0	0 ~ 5		0: General-purpose output 1: For future expansion 2: Output when axis-4 servo is ON (System monitor task output) 3: For future expansion
55	Output function selection 309	0	0 ~ 5		0: General-purpose output 1: For future expansion 2: Output when axis-5 servo is ON (System monitor task output) 3: For future expansion
56	Output function selection 310	0	0 ~ 5		0: General-purpose output 1: For future expansion 2: Output when axis-6 servo is ON (System monitor task output) 3: For future expansion
57	Output function selection 311	0	0 ~ 5		0: General-purpose output, 1 to 3: For future expansion
58	Output function selection 312	0	0 ~ 5		0: General-purpose output, 1 to 3: For future expansion

I/O Parameters

No.	Parameter name	Default value (Reference)	Input range	Unit	Remarks
59	Output function selection 313	0	0 ~ 5		0: General-purpose output 1: System-memory backup battery voltage-low warning level or lower
60	Output function selection 314	0	0 ~ 5		0: General-purpose output 1: Absolute-data backup battery voltage-low warning level or lower (OR check of all axes. Upon detection of abnormal level, the output will be latched until a power-ON reset or software reset is executed.)
61	Output function selection 315	0	0 ~ 5		0: General-purpose output
62	Physical input port number for axis-1 brake forced release	0	0 ~ 299		Forcibly unlock the brake when the applicable port is ON (be aware of a falling load). * Invalid if “0” is set (Invalid if input port No. 0 is specified) * The synchro slave axis will follow the synchro master axis.
63	Physical input port number for axis-2 brake forced release	0	0 ~ 299		Forcibly unlock the brake when the applicable port is ON (be aware of a falling load). * Invalid if “0” is set (Invalid if input port No. 0 is specified) * The synchro slave axis will follow the synchro master axis.
64	Physical input port number for axis-3 brake forced release	0	0 ~ 299		Forcibly unlock the brake when the applicable port is ON (be aware of a falling load). * Invalid if “0” is set (Invalid if input port No. 0 is specified) * The synchro slave axis will follow the synchro master axis.
65	Physical input port number for axis-4 brake forced release	0	0 ~ 299		Forcibly unlock the brake when the applicable port is ON (be aware of a falling load). * Invalid if “0” is set (Invalid if input port No. 0 is specified) * The synchro slave axis will follow the synchro master axis.
66	Physical input port number for axis-5 brake forced release	0	0 ~ 299		Forcibly unlock the brake when the applicable port is ON (be aware of a falling load). * Invalid if “0” is set (Invalid if input port No. 0 is specified) * The synchro slave axis will follow the synchro master axis. * Valid only when the controller supports up to 6 axes.
67	Physical input port number for axis-6 brake forced release	0	0 ~ 299		Forcibly unlock the brake when the applicable port is ON (be aware of a falling load). * Invalid if “0” is set (Invalid if input port No. 0 is specified) * The synchro slave axis will follow the synchro master axis. * Valid only when the controller supports up to 6 axes.
68 ~ 69	(For expansion)	0			(For future expansion)
70	Unaffected general-purpose output area number (MIN) when all operations/programs are aborted	0	0 ~ 599		* Important: Outputs in this area must be operated under the responsibility of user programs including the “I/O processing program at operation/program abort.” Outputs outside this area will be forcibly turned OFF. (Invalid if “0” is set)
71	Unaffected general-purpose output area number (MAX) when all operations/programs are aborted	0	0 ~ 599		
72	Unaffected general-purpose output area number (MIN) when all operations are paused (servo-axis soft interlock + output-port soft interlock)	300	0 ~ 599		* Important: Outputs in this area must be operated (including recovery) under the responsibility of user programs including the “I/O processing program at all operations pause.” Outputs outside this area will be forcibly turned OFF, reflecting/holding the results of operations performed while all operation pause is effective (only during automatic operation). (Invalid if “0” is set)
73	Unaffected general-purpose output area number (MAX) when all operations are paused (servo-axis soft interlock + output-port soft interlock)	599	0 ~ 599		
74	Number of TP user output ports used (hand, etc.)	0	0 ~ 8		Referenced by TP. (Invalid if “0” is set)

I/O Parameters

No.	Parameter name	Default value (Reference)	Input range	Unit	Remarks
75	TP user output port start number (hand, etc.)	0	0 ~ 599		Referenced by TP.
76	AUTO mode physical output port number	0	0 ~ 599		(Invalid if “0” is set)
77	Input port number permitted to receive PC/TP servo movement command	0	0 ~ 299		* Important: Invalid once operation is started. (Invalid if “0” is set)
78	Axis pattern permitted to receive PC/TP servo movement command for	0	0B ~ 11111111B		
79	Input port number for remote mode control	0	0 ~ 299		System mode = MANU if specified DI = ON or AUTO/MANU-SW = MANU. (Invalid if “0” is set) * Debug filter is invalid for the remote-mode control input port
80	(PC/TP SIO usage)	1	1 ~ 1		Switching of DIP switches
81	(PC/TP SIO station code)	153	153 ~ 153		Fixed to 153 (99H).
82	(PC/TP SIO reservation)	0			
83	(PC/TP SIO reservation)	0			
84	(PC/TP SIO reservation)	0			
85	(PC/TP SIO reservation)	0			
86	(PC/TP SIO reservation)	0			
87	(PC/TP SIO reservation)	0			
88	(PC/TP SIO reservation)	0			
89	(PC/TP SIO reservation)	0			
90	Usage of SIO channel 0 opened to user (AUTO mode)	0	0 ~ 9		0: Open SEL program 1: Open SEL program (Connect PC/TP when both devices are closed = Used exclusively by the manufacturer) 2: IAI protocol B (Slave)
91	Station code of SIO channel 0 opened to user	153	0 ~ 255		Valid only with IAI protocol.
92	Baud rate type of SIO channel 0 opened to user	0	0 ~ 5		0: 9.6, 1: 19.2, 2: 38.4, 3: 57.6, 4: 76.8, 5: 115.2 kbps
93	Data length of SIO channel 0 opened to user	8	7 ~ 8		
94	Stop bit length of SIO channel 0 opened to user	1	1 ~ 2		
95	Parity type of SIO channel 0 opened to user	0	0 ~ 2		0: None 1: Odd 2: Even
96	Receive operation type of SIO channel 0 opened to user	0	0 ~ 1		0: Forcibly enable receive after send 1: Do not forcibly enable receive at send
97	IAI-protocol minimum response delay for SIO channel 0 opened to user	0	0 ~ 999	msec	Valid only with IAI protocol.
98	(Reservation of SIO channel 0 opened to user)	0			
99	(Reservation of SIO channel 0 opened to user)	0			

PC: PC software
TP: Teaching pendant

I/O Parameters

No.	Parameter name	Default value (Reference)	Input range	Unit	Remarks
100	Attribute 1 of SIO channel 3 opened to user (expanded)	28100010H	0H ~ FFFFFFFFH		Bits 28 to 31: Baud rate type (0: 9.6, 1: 19.2, 2: 38.4, 3: 57.6, 4: 76.8, 5: 115.2 kbps) Bits 24 to 27: Data length (7 or 8) Bits 20 to 23: Stop bit length (1 or 2) Bits 16 to 19: Parity type (0: None, 1: Odd, 2: Even) Bits 12 to 15: Communication mode (0: RS232C, 1: RS422, 2: RS485) * Only “0” can be selected for board channels other than Nos. 1 and 2 Bits 8 to 11: Receive operation type (0: RS485 = Forcibly enable receive immediately after send, RS232C/RS422 = Forcibly enable receive immediately before send 1: Do not forcibly enable receive at send) Bits 4 to 7: Board channel assignment number (1: D-sub upper, 2: D-sub lower, 3: Flat connector upper, 4: Flat connector lower) Bits 0 to 3: Expanded I/O slot assignment number (Expanded I/O slots 1 to 3 from the slot next to the standard IO (I/O1) slot. * “0” means no slots are used)
101	(Reservation of SIO channel 3 opened to user (expanded))	0	0H ~ FFFFFFFFH		
102	Attribute 1 of SIO channel 4 opened to user (expanded)	28100020H	0H ~ FFFFFFFFH		(Same as with I/O parameter No. 100)
103	(Reservation of SIO channel 4 opened to user (expanded))	0	0H ~ FFFFFFFFH		
104	Attribute 1 of SIO channel 5 opened to user (expanded)	28100010H	0H ~ FFFFFFFFH		(Same as with I/O parameter No. 100)
105	(Reservation of SIO channel 5 opened to user (expanded))	0	0H ~ FFFFFFFFH		
106	Attribute 1 of SIO channel 6 opened to user (expanded)	28100020H	0H ~ FFFFFFFFH		(Same as with I/O parameter No. 100)
107	(Reservation of SIO channel 6 opened to user (expanded))	0	0H ~ FFFFFFFFH		
108	Attribute 1 of SIO channel 7 opened to user (expanded)	28100010H	0H ~ FFFFFFFFH		(Same as with I/O parameter No. 100)
109	(Reservation of SIO channel 7 opened to user (expanded))	0	0H ~ FFFFFFFFH		
110	Attribute 1 of SIO channel 8 opened to user (expanded)	28100020H	0H ~ FFFFFFFFH		(Same as with I/O parameter No. 100)
111	(Reservation of SIO channel 8 opened to user (expanded))	0	0H ~ FFFFFFFFH		
112	SIO system use (SP9)	28100030H	0H ~ FFFFFFFFH		(Same as with I/O parameter No. 100)
113	(SIO system reserve (SP9))	0	0H ~ FFFFFFFFH		
114	SIO system use (SP10)	28100040H	0H ~ FFFFFFFFH		(Same as with I/O parameter No. 100)
115	(SIO system reserve (SP10))	0	0H ~ FFFFFFFFH		
116 ~ 119	(For expansion)	0			

I/O Parameters

No.	Parameter name	Default value (Reference)	Input range	Unit	Remarks
120	Network attribute 1	1H	0H ~ FFFFFFFFH		Bits 0 to 3: CC-Link remote register area H/L byte swap selection (0: Do not swap, 1: Swap) * The number of used ports and number of occupied stations in I/O parameter Nos. 14 and 15 must match.
121	Network attribute 2	0	0H ~ FFFFFFFFH		
122	Network attribute 3	0	0H ~ FFFFFFFFH		
123	Network attribute 4	0H	0H ~ FFFFFFFFH		Bits 0 to 3: Ethernet TCP/IP message communication Selection whether to permit 0.0.0.0 (IP address of connection destination can be ignored) as IP address of connection destination on server (0: Do not permit 1: Permit (not recommended)) * Note: Number of clients that can be connected simultaneously to one server port channel = 1
124	Network attribute 5	0H	0H ~ FFFFFFFFH		Ethernet TCP/IP message communication attribute Ethernet client/server type (0: Not in use 1: Client (Automatic assignment of own port number) (2: Client (Specification of own port number) → This setting is not recommended because of device limitations, such as an error generation when the port is opened for approx. 10 minutes after disablement of close response check due to a power failure at the connection destination, etc.) 3: Server (Specification of own port number)) * Note: Number of clients that can be connected simultaneously to one server port channel = 1 Bits 0 to 3: IAI protocol B/TCP (MANU mode) * PC software can be connected only in the case of a client. Bits 4 to 7: IAI protocol B/TCP (AUTO mode) * PC software can be connected only in the case of a client. Bits 8 to 11: Channel 31 opened to user Bits 12 to 15: Channel 32 opened to user Bits 16 to 19: Channel 33 opened to user Bits 20 to 23: Channel 34 opened to user * If the parameter settings for own port number, client/server type, IP address of connection destination and port number of connection destination do not match completely between the IAI protocol B/TCP MANU and AUTO modes, the connection will be cut off when the MANU/AUTO mode is switched.
125	Network attribute 6	1E32H	0H ~ FFFFFFFFH		Bits 0 to 7: Module-initialization check timer setting when Ethernet is used (100 msec) Bits 8 to 15: Module-initialization check timer setting when Ethernet is not used (100 msec) Bits 16 to 23: Increment of “PC/TP reconnection delay at software reset” when Ethernet is used (sec)

PC: PC software
TP: Teaching pendant

I/O Parameters

No.	Parameter name	Default value (Reference)	Input range	Unit	Remarks
126	Network attribute 7	7D007D0H	0H ~ FFFFFFFFH		Ethernet TCP/IP message communication attribute Bits 0 to 15: Min timeout value (msec) Bits 16 to 31: Mout timeout value (msec)
127	Network attribute 8	5050214H	0H ~ FFFFFFFFH		Ethernet TCP/IP message communication attribute Bits 0 to 7: CONNECT_TIMEOUT (Change is prohibited) (Setting of “0” is prohibited) (sec) Bits 8 to 15: Connection retry interval (IAI protocol B/TCP) (sec) Bits 16 to 23: Send timeout value (sec) Bits 24 to 31: IAI protocol B-SIO non-communication check timer setting (sec) (IAI protocol B/TCP connection trigger)
128	Network attribute 9	0H	0H ~ FFFFFFFFH		Ethernet TCP/IP message communication attribute Bits 0 to 15: SEL server open timeout value (sec) (No timeout check when “0” is set)
129	Network attribute 10	0H	0H ~ FFFFFFFFH		Ethernet operation requirement Bits 0 to 3: Modbus/TCP (Remote I/O) (0: Not in use 1: Use (Disable EXCEPTION status) 2: Use (Enable EXCEPTION status (upper two digits of error number)) * Refer to the explanation of error levels in the operation manual and perform processing appropriate for each error level. Bits 4 to 7: TCP/IP message communication (0: Not in use, 1: Use) Bits 8 to 31: Reserved (Operation requirement)
130	Own MAC address (H)	0H	Reference only (HEX)		Only lower two bytes are valid.
131	Own MAC address (L)	0H	Reference only (HEX)		
132	Own IP address (H)	192	1 ~ 255		*Setting of “0” and “127” is prohibited.
133	Own IP address (MH)	168	0 ~ 255		
134	Own IP address (ML)	0	0 ~ 255		
135	Own IP address (L)	1	1 ~ 254		*Setting of “0” and “255” is prohibited.
136	Subnet mask (H)	255	0 ~ 255		
137	Subnet mask (MH)	255	0 ~ 255		
138	Subnet mask (ML)	255	0 ~ 255		
139	Subnet mask (L)	0	0 ~ 255		
140	Default gateway (H)	0	0 ~ 255		
141	Default gateway (MH)	0	0 ~ 255		
142	Default gateway (ML)	0	0 ~ 255		
143	Default gateway (L)	0	0 ~ 255		

I/O Parameters

No.	Parameter name	Default value (Reference)	Input range	Unit	Remarks
144	IAI protocol B/TCP: Own port number (MANU mode)	64511	1025 ~ 65535		* Important note: Always set a unique number for each port number. (Duplication of port numbers is permitted only in the IAI protocol B/TCP MANU/AUTO modes.)
145	Channel 31 opened to user (TCP/IP): Own port number	64512	1025 ~ 65535		
146	Channel 32 opened to user (TCP/IP): Own port number	64513	1025 ~ 65535		
147	Channel 33 opened to user (TCP/IP): Own port number	64514	1025 ~ 65535		
148	Channel 34 opened to user (TCP/IP): Own port number	64515	1025 ~ 65535		
149	IAI protocol B/TCP: IP address of connection destination (MANU mode) (H)	192	0 ~ 255		* Setting of “0” and “127” is prohibited.
150	IAI protocol B/TCP: IP address of connection destination (MANU mode) (MH)	168	0 ~ 255		
151	IAI protocol B/TCP: IP address of connection destination (MANU mode) (ML)	0	0 ~ 255		
152	IAI protocol B/TCP: IP address of connection destination (MANU mode) (L)	100	0 ~ 254		* Setting of “0” and “255” is prohibited.
153	IAI protocol B/TCP: Port number of connection destination (MANU mode)	64611	0 ~ 65535		* “0” can be set in the case of a server. 0 = Port number of connection destination is ignored (only the IP address is checked) * “0” cannot be set in the case of a client.
154	IAI protocol B/TCP: IP address of connection destination (AUTO mode) (H)	192	0 ~ 255		* Setting of “0” and “127” is prohibited.
155	IAI protocol B/TCP: IP address of connection destination (AUTO mode) (MH)	168	0 ~ 255		
156	IAI protocol B/TCP: IP address of connection destination (AUTO mode) (ML)	0	0 ~ 255		
157	IAI protocol B/TCP: IP address of connection destination (AUTO mode) (L)	100	0 ~ 254		* Setting of “0” and “255” is prohibited.
158	IAI protocol B/TCP: Port number of connection destination (AUTO mode)	64611	0 ~ 65535		* “0” can be set in the case of a server. 0 = Port number of connection destination is ignored (only the IP address is checked) * “0” cannot be set in the case of a client.
159	IAI protocol B/TCP: Own port number (AUTO mode)	64516	1025 ~ 65535		* Important note: Always set a unique number for each port number. (Duplication of port numbers is permitted only in the IAI protocol B/TCP MANU/AUTO modes.)
160 ~ 169	(For network expansion)	0			
170 ~ 200	(For expansion)	0			

I/O Parameters

No.	Parameter name	Default value (Reference)	Input range	Unit	Remarks
201	Attribute 1 of SIO channel 1 opened to user (standard mount)	28100001H	0H ~ FFFFFFFFH		Bits 28 to 31: Baud rate type (0: 9.6, 1: 19.2, 2: 38.4, 3: 57.6, 4: 76.8, 5: 115.2 kbps) * If flow control is performed, select 38.4 kbps or below. Use of a higher baud rate may generate an overrun error, etc. Bits 24 to 27 Data length (7 or 8) Bits 20 to 23: Stop bit length (1 or 2) Bits 16 to 19: Parity type (0: None, 1: Odd, 2: Even) Bits 12 to 15: For future expansion Bits 8 to 11: For future expansion Bits 4 to 7: For future expansion Bits 0 to 3: Use selection (0: Do not use, 1: Use) * Used on the application level.
202	Attribute 2 of SIO channel 1 opened to user (standard mount)	00000001H	0H ~ FFFFFFFFH		Bits 28 to 31: For future expansion Bits 24 to 27: For future expansion Bits 20 to 23: For future expansion Bits 16 to 19: Character transmission interval (msec) Bits 12 to 15: Communication method (0: Full-duplex, 1: Half-duplex) Bits 8 to 11: Send operation type in half-duplex communication (0: Do not check CTS-ON at send 1: Check CTS-ON at send) Bits 0 to 7: Minimum Receive → Send switching delay in half-duplex communication (msec)
203	Attribute 3 of SIO channel 1 opened to user (standard mount)	01118040H	0H ~ FFFFFFFFH		Bits 28 to 31: Flow control type (0: None, 1: Xon/Xoff, 2: Hardware) * Valid only in full-duplex communication. * If flow control is performed, select 38.4 kbps or below. Use of a higher baud rate may generate an overrun error, etc. Bits 24 to 27: Xon send selection when send is enabled after SIO-CPU reset (0: Do not send, 1: Send) * Valid only in full-duplex communication with Xon/Xoff flow control Bits 20 to 23: Send enable/disable selection at port open (0: Disable, 1: Enable) * Valid only in full-duplex communication with Xon/Xoff flow control. Bits 16 to 19: Xon/Xoff send selection at port close (0: Do not send, 1: Send Xon, 2: Send Xoff) * Valid only in full-duplex communication with Xon/Xoff flow control. Bits 8 to 15: Flow control high limit (bytes) Bits 0 to 7: Flow control low limit (bytes) * If values are set to a magnitude correlation of “Flow control low limit ≥ SCI receive buffer size – Flow control high limit,” both the flow control high/low limits will be converted to a value corresponding to one-fourth the SCI receive buffer size.

I/O Parameters

No.	Parameter name	Default value (Reference)	Input range	Unit	Remarks
204	Attribute 4 of SIO channel 1 opened to user (standard mount)	00000000H	0H ~ FFFFFFFFH		
205	Attribute 5 of SIO channel 1 opened to user (standard mount)	00000000H	0H ~ FFFFFFFFH		
206	Attribute 6 of SIO channel 1 opened to user (standard mount)	00000000H	0H ~ FFFFFFFFH		
207	Attribute 7 of SIO channel 1 opened to user (standard mount)	00000000H	0H ~ FFFFFFFFH		
208	Attribute 8 of SIO channel 1 opened to user (standard mount)	00000000H	0H ~ FFFFFFFFH		
209	Attribute 9 of SIO channel 1 opened to user (standard mount)	00000000H	0H ~ FFFFFFFFH		
210	Attribute 10 of SIO channel 1 opened to user (standard mount)	00000000H	0H ~ FFFFFFFFH		
211	Attribute 11 of SIO channel 1 opened to user (standard mount)	00000000H	0H ~ FFFFFFFFH		
212	Attribute 12 of SIO channel 1 opened to user (standard mount)	00000000H	0H ~ FFFFFFFFH		
213	Attribute 1 of SIO channel 2 opened to user (standard mount)	28100001H	0H ~ FFFFFFFFH		Bits 28 to 31: Baud rate type (0: 9.6, 1: 19.2, 2: 38.4, 3: 57.6, 4: 76.8, 5: 115.2 kbps) * If flow control is performed, select 38.4 kbps or below. Use of a higher baud rate may generate an overrun error, etc. Bits 24 to 27 Data length (7 or 8) Bits 20 to 23: Stop bit length (1 or 2) Bits 16 to 19: Parity type (0: None, 1: Odd, 2: Even) Bits 12 to 15: For future expansion Bits 8 to 11: For future expansion Bits 4 to 7: For future expansion Bits 0 to 3: Use selection (0: Do not use, 1: Use) * Used on the application level.
214	Attribute 2 of SIO channel 2 opened to user (standard mount)	00000001H	0H ~ FFFFFFFFH		Bits 28 to 31: For future expansion Bits 24 to 27: For future expansion Bits 20 to 23: For future expansion Bits 16 to 19: Character transmission interval (msec) Bits 12 to 15: Communication method (0: Full-duplex, 1: Half-duplex) Bits 8 to 11: Send operation type in half-duplex communication (0: Do not check CTS-ON at send 1: Check CTS-ON at send) Bits 0 to 7: Minimum Receive → Send switching delay in half-duplex communication (msec)

I/O Parameters

No.	Parameter name	Default value (Reference)	Input range	Unit	Remarks
215	Attribute 3 of SIO channel 2 opened to user (standard mount)	01118040H	0H ~ FFFFFFFFH		Bits 28 to 31: Flow control type (0: None, 1: Xon/Xoff, 2: Hardware) * Valid only in full-duplex communication. * If flow control is performed, select 38.4 kbps or below. Use of a higher baud rate may generate an overrun error, etc. Bits 24 to 27: Xon send selection when send is enabled after SIO-CPU reset (0: Do not send, 1: Send) * Valid only in full-duplex communication with Xon/Xoff flow control. Bits 20 to 23: Send enable/disable selection at port open (0: Disable, 1: Enable) * Valid only in full-duplex communication with Xon/Xoff flow control. Bits 16 to 19: Xon/Xoff send selection at port close (0: Do not send, 1: Send Xon, 2: Send Xoff) * Valid only in full-duplex communication with Xon/Xoff flow control. Bits 8 to 15: Flow control high limit (bytes) Bits 0 to 7: Flow control low limit (bytes) *If values are set to a magnitude correlation of "Flow control low limit ≥ SCI receive buffer size – Flow control high limit," both the flow control high/low limits will be converted to a value corresponding to one-fourth the SCI receive buffer size.
216	Attribute 4 of SIO channel 2 opened to user (standard mount)	00000000H	0H ~ FFFFFFFFH		
217	Attribute 5 of SIO channel 2 opened to user (standard mount)	00000000H	0H ~ FFFFFFFFH		
218	Attribute 6 of SIO channel 2 opened to user (standard mount)	00000000H	0H ~ FFFFFFFFH		
219	Attribute 7 of SIO channel 2 opened to user (standard mount)	00000000H	0H ~ FFFFFFFFH		
220	Attribute 8 of SIO channel 2 opened to user (standard mount)	00000000H	0H ~ FFFFFFFFH		
221	Attribute 9 of SIO channel 2 opened to user (standard mount)	00000000H	0H ~ FFFFFFFFH		
222	Attribute 10 of SIO channel 2 opened to user (standard mount)	00000000H	0H ~ FFFFFFFFH		
223	Attribute 11 of SIO channel 2 opened to user (standard mount)	00000000H	0H ~ FFFFFFFFH		
224	Attribute 12 of SIO channel 2 opened to user (standard mount)	00000000H	0H ~ FFFFFFFFH		
225 ~ 250	(For expansion)	0			

2. Parameters Common to All Axes

No.	Parameter name	Default value (Reference)	Input range	Unit	Remarks
			~		
1	Valid axis pattern	0000B	00B ~ 11111111B		An OFF bit indicates that no driver is installed.
2	Default override	100	1 ~ 100		Used if not specified in program. (Invalid for SIO operation)
3 ~ 8	(For expansion)	0	~		
9	Physical axis pattern for which enable switch (deadman switch/safety gate) is effective	11111111B	00B ~ 11111111B		Not affected by a BASE command. (To make the enable switch effective for all axes (= it must be effective for all axes, as a rule), always specify “11111111.” Only when “11111111” is set will the enable switch be included in the drive-source cutoff factor. If a value other than “11111111” is set, the drive source will not be cut off and only the servo of the specified axis will be turned off.) * All axes are specified if “Other parameter No. 11: Deadman switch/safety-gate open recovery type” is set to 1 (Reset required for recovery). * The drive-source cannot be cut off for axes whose motor-drive power unit is not housed inside this controller or whose drive-source cutoff circuit is not controlled by this controller. If an optional (custom-order) specification is used, the optional (custom-order) specification is given priority over the physical axis for which the deadman switch is effective, drive-source cutoff specification, servo-off specification, 7-segment display specification, etc.
10	(For expansion)	0	0H ~ FFFFFFFFH		
11	Default acceleration	30	1 ~ 200	0.01 G	Used if not specified in position data, program or SIO message, etc.
12	Default deceleration	30	1 ~ 200	0.01 G	Used if not specified in position data, program or SIO message, etc.
13	Default speed	30	1 ~ 250	mm/s	Used if not specified in SIO message or position data, when movement is to be continued, etc.
14	Valid selection when operation point data deceleration is 0	0	0 ~ 5		0: “Deceleration = Acceleration” when the deceleration in the operation point data is “0” 1: “Deceleration = 0” when the deceleration in the operation point data is “0”
15	Maximum jog speed when home return is incomplete	30	1 ~ 250	mm/s	
16 ~ 19	(For expansion)	0	~		
20	Maximum operating speed check timing	1	0 ~ 1		0: Check at input 1: Check at operation * If “Check at operation” is selected, the distribution speed (CP) of specified speed or the specified speed (PTP) will be compared against the maximum operating speed of each axis and clamped at the allowable speed. Accordingly, the system can achieve its maximum performance in accordance with the operation command. However, complete check cannot be performed at input (since the command/operation start position is indeterminable). In the case of CP, the distribution speed will vary depending on the operation start position. Therefore, specifying CP at an unspecified position (first point movement, etc.) will cause the speed to fluctuate depending on where the operation is started.
21	Maximum operating speed for input value check	1000	1 ~ 9999	mm/s	If “Input” is selected as the maximum speed check timing, this parameter will be used to check for input error.
22	Maximum acceleration	200	1 ~ 999	0.01 G	
23	Maximum deceleration	200	1 ~ 999	0.01 G	
24	Minimum emergency deceleration	30	1 ~ 300	0.01 G	
25	(Acceleration/deceleration at home return (old))	30	1 ~ 300	0.01 G	(Invalid)
26	Acceleration/deceleration specification type	0	Reference only		0: T system, 1: P, M system
27	Master axis type	0	Reference only		0: T system, 1: P system

Parameters Common to All Axes

No.	Parameter name	Default value (Reference)	Input range	Unit	Remarks
28	Selection of inching → jog auto-switching prohibition	0	Reference only		0: Execute auto-switching (Continuous button ON timer), 1: Prohibited * Referenced by the PC/TP (no handy terminal auto-switching function)
29	All-axis setting bit pattern 1	0	0H ~ FFFFFFFFH		Bits 0 to 3: Selection of use of last PC/TP inching distance (0: Do not use, 1: Use) * Referenced by the PC/TP (Excluding ANSI-compatible TP) Bits 4 to 7: Overrun (servo) error level (0: Operation-cancellation level, 1: Cold-start level, 2: Operation-cancellation level at reset, thereafter cold-start level) Bits 8 to 11: "Actual-position soft limit over (servo)" error level (0: Operation-cancellation level, 1: Cold-start level, 2: Operation-cancellation level at reset, thereafter cold-start level) Bits 12 to 15: For future expansion Bits 16 to 19: Abnormal absolute-data backup battery voltage error level (0: Operation-cancellation level, 1: Message level) (Main application version 0.37 or later)
30	Default division angle	150	0 ~ 1200	0.1 degree	("0" can be input in PC software version 1.1.1.0 or later or TP application version 1.06 or later)
31	Default division distance	0	0 ~ 10000	mm	
32	Arch-trigger start-point check type	0	0 ~ 5		0: Check operation amount and actual position, 1: Check operation amount only
33	Safety speed in manual mode	250	1 ~ 250	mm/s	* This parameter is treated as a value equivalent to or below the minimum value set in "Axis-specific parameter No. 29, VLMX speed" for all valid axes.
34 ~100	(For expansion)	0	~		
			~		
101	Driver/encoder communication line channel setting (axes 1 to 4)	0H	Reference only		Bits 0 to 7: Driver/encoder communication line channel number of axis 1 Bits 8 to 15: Driver/encoder communication line channel number of axis 2 Bits 16 to 23: Driver/encoder communication line channel number of axis 3 Bits 24 to 31: Driver/encoder communication line channel number of axis 4 (Invalid if "FFh" is set (driver board not installed)) * The channel number corresponds to the number assigned internally to the hardware (0 ~).
102	Driver/encoder communication line channel setting (axes 5 and 6)	0H	Reference only		Bits 0 to 7: Driver/encoder communication line channel number of axis 5 Bits 8 to 15: Driver/encoder communication line channel number of axis 6 Bits 16 to 23: For future expansion Bits 24 to 31: For future expansion (Invalid if "FFh" is set (driver board not installed)) * The channel number corresponds to the number assigned internally to the hardware (0 ~).

PC: PC software
TP: Teaching pendant

Parameters Common to All Axes

No.	Parameter name	Default value (Reference)	Input range	Unit	Remarks
103	Driver initialization communication type setting (axes 1 to 4)	0H	Reference only		Bits 0 to 7: Driver initialization communication type of axis 1 Bits 8 to 15: Driver initialization communication type of axis 2 Bits 16 to 23: Driver initialization communication type of axis 3 Bits 24 to 31: Driver initialization communication type of axis 4 (FFh: Perform initialization communication (data of the applicable axis only) 0: Do not perform initialization communication 1 to 6: Perform initialization communication (data of the applicable axis + data of other axes in which the same driver board is installed) * The parameter value indicates the axis number of other axis in which the same driver board is installed.)
104	Driver initialization communication type setting (axes 5 and 6)	0H	Reference only		Bits 0 to 7: Driver initialization communication type of axis 5 Bits 8 to 15: Driver initialization communication type of axis 6 Bits 16 to 23: For future expansion Bits 24 to 31: For future expansion (FFh: Perform initialization communication (data of the applicable axis only) 0: Do not perform initialization communication 1 to 6: Perform initialization communication (data of the applicable axis + data of other axes in which the same driver board is installed) * The parameter value indicates the axis number of other axis in which the same driver board is installed.)
105 ~ 120	(For expansion)	0	~		

PC: PC software
TP: Teaching pendant

3. Axis-Specific Parameters

No	Parameter name	Default value (Reference)	Input range	Unit	Remarks
			~		
1	Axis operation type	0	0 ~ 1		0: Linear movement axis, 1: Rotational movement axis (Angle control)
2 ~ 5	(For expansion)	0	~		
6	Coordinate/physical-operation direction selection	1	0 ~ 1		0: Motor CCW → Positive direction on the coordinate system 1: Motor CCW → Negative direction on the coordinate system
7	Soft limit +	50000	-99999999 ~ 99999999	0.001 mm	Fixed to 359.999 degrees internally in the index mode. Invalid in the infinite-stroke mode.
8	Soft limit –	0	-99999999 ~ 99999999	0.001 mm	Fixed to 0 degree internally in the index mode. Invalid in the infinite-stroke mode.
9	Soft-limit actual position margin	2000	0 ~ 9999	0.001 mm	Actual position margin in the positioning boundary critical zone in the infinite-stroke mode
10	Home-return method	0	0 ~ 5		0: Search phase Z after end search, 1: Current position 0 home (This parameter can be specified only with an incremental encoder. Pay attention to contact.), 2: Current position = Preset home (This parameter can be specified only with an incremental encoder. Pay attention to contact.)
11	Home-return end-search direction selection	0	0 ~ 1		0: Negative end of the coordinate system 1: Positive end of the coordinate system
12	Home preset value	0	-99999999 ~ 99999999	0.001 mm	(Refer to axis-specific parameter No. 76)
13	SIO/PIO home-return order	0	0 ~ 16		Executed from the smallest one.
14	Home-sensor input polarity	0	0 ~ 2		0: Do not use, 1: Contact a, 2: Contact b
15	Overrun-sensor input polarity	0	0 ~ 2		0: Do not use, 1: Contact a, 2: Contact b
16	Creep-sensor input polarity	0	0 ~ 2		0: Do not use, 1: Contact a, 2: Contact b
17	Initial home-sensor pull-out speed at home return	10	1 ~ 100	mm/sec	
18	Creep speed at home return	100	1 ~ 500	mm/sec	End search speed in the creep-sensor non-detection section, if a creep sensor is used
19	End search speed at home return	20	1 ~ 100	mm/sec	
20	Phase-Z search speed at home return	3	1 ~ 10	mm/sec	Exercise caution, since limitations apply depending on the read/encoder pulse count.
21	Offset travel distance at home return	1000	-99999999 ~ 99999999	0.001 mm	Offset travel distance from the ideal phase-Z position (Positive value = Applied in the direction of moving away from the end) (Refer to axis-specific parameter No. 76)
22	Allowable phase-Z position error check value at home return	500	0 ~ 99999999	0.001 mm	Minimum allowable distance between the end (mechanical or LS) and phase Z in a rotary encoder specification. Phase-Z search limit in a linear encoder specification.
23	Phase-Z count per encoder revolution	1	1 ~ 8		Only “1” can be set, in the case of an absolute encoder. Invalid in the case of a linear encoder.
24	Push stop check time at home return	700	1 ~ 5000	msec	
25	Push stop check time at positioning	500	1 ~ 5000	msec	
26	(Phase-Z evacuation distance at absolute home return (old))	1000	0 ~ 99999	0.001 mm	Evacuation distance from the actual phase-Z position (Positive value = Applied in the direction of moving away from the end) (Phase-shift prevention margin) (Refer to axis-specific parameter No. 76)
27	Maximum motor speed	5000	Reference only	rpm, mm/sec	In rpm when a rotary encoder is used, or in mm/sec when a linear encoder is used (cannot be changed).
28	Maximum operating speed of each axis	1000	1 ~ 9999	mm/s	
29	VLMX speed	1000	1 ~ 9999	mm/s	During VLMX operation, the maximum operating speed of each axis or VLMX speed, whichever is lower, is used as the maximum speed of the applicable axis.

Axis-Specific Parameters

No	Parameter name	Default value (Reference)	Input range	Unit	Remarks
30	Servo ON check time	150	0 ~ 5000	msec	Brake equipped: Time after receiving a servo-ON start response until start of brake unlocking Brake not equipped: Time after receiving a servo ON start response until transition to an operation-enabled status
31	Offset travel speed at home return	3	1 ~ 500	mm/sec	
32	Actual distance between phase Z and end	-1	-1 ~ 99999	0.001 mm	Absolute distance from the end (mechanical or LS). Obtained automatically if the distance is a negative value. When multiple actuators are combined, it is recommended to write the flash ROM after automatic acquisition. (Refer to axis-specific parameter No. 76)
33	Ideal distance between phase Z and end	0	0 ~ 99999	0.001 mm	Absolute distance from the end (mechanical or LS). (Refer to axis-specific parameter No. 76)
34	Brake equipment specification	0	0 ~ 1		0: Not equipped, 1: Equipped
35	Brake unlock check time	150	0 ~ 3000	msec	Time after receiving a brake-unlock start response until transition to an operation-enabled status
36	Brake lock check time	300	0 ~ 1000	msec	Time after receiving a brake-lock start response until start of servo OFF
37	Encoder linear/rotary type	0	0 ~ 1		0: Rotary encoder 1: Linear encoder
38	Encoder ABS/INC type	0	0 ~ 1		0: INC, 1: ABS
39	Magnetic-pole sensor equipment specification (For future expansion = Change prohibited)	1	0 ~ 1		0: Not equipped, 1: Equipped
40	For future expansion (change prohibited)	0	0 ~ 1		
41	For future expansion (change prohibited)	25	1 ~ 100	DRVVR	
42	Encoder resolution	131072	0 ~ 99999999	Pulse/rev, 0.001 μm/pulse	Pulses (before division)/rev, in the case of a rotary encoder. 0.001 μm/pulse (before division), in the case of a linear encoder.
43	Encoder division ratio	3	-7 ~ 7		Pulses are multiplied by (“n”th power of 1/2).
44	Length measurement correction	0	-99999999 ~ 99999999	0.001 mm/1M	Valid only for linear movement axes. (Coordinates other than the encoder reference Z point will change proportionally.)
45 ~ 46	(For expansion)	0			
47	Screw lead	20000	1 ~ 99999999	0.001 mm	Valid only for linear movement axes. Invalid in the case of a linear encoder.
48 ~ 49	(For expansion)	0			
50	Gear ratio numerator	1	1 ~ 99999999		Invalid in the case of a linear encoder.
51	Gear ratio denominator	1	1 ~ 99999999		Invalid in the case of a linear encoder.
52	Synchro setting bit pattern 1	0	0H ~ FFFFFFFFH		* Effective only when specified for the synchro slave axis. (Main application version 0.62 or later) Bits 8 to 11: Selection of use of phase Z of the synchro slave axis during home return of the incremental encoder (INC-INC control) (0: Do not use phase Z of the slave axis 1: Use not use phase Z of the slave axis) *If phase Z of the slave axis is used, the following parameters of the slave axis will become effective: “Axis-specific parameter No. 21, Offset travel distance at home return” “Axis-specific parameter No. 12, Home preset value” *Adjustment method when phase Z of the slave axis is used [1] Complete a home return in the synchronized mode. • Ignore the “Error No. D0A, Driver overload error” that generates upon completion of home return. • If an “Error No. C9C, Defective phase-Z position error” generates, the relationship of the installed positions of both synchro axes must be adjusted.

No	Parameter name	Default value (Reference)	Input range	Unit	Remarks
					• If an “Error No. C72/D6B, Overrun error” generates, adjust the relationship of the installed positions of both synchro axes or set “Axis-specific parameter No. 15, Overrun-sensor input polarity” to “0 (Do not use)“ and stop using the overrun sensor. [2] Turn the servo OFF by actuating an emergency stop. [3] Align the physical position relationship of the synchro master axis and slave axis and then read off their present position coordinates. [4] Calculate the value of “present position coordinates of synchro slave axis – present position coordinates of synchro master axis” and set the calculated value in “Axis-specific parameter No. 21, Offset travel distance at home return” for the synchro slave axis (Exercise caution that unit conversion is required in the above calculation.) [5] Write the data to the flash ROM, and then execute a software reset or power ON reset of the controller. * Effective only when specified for the synchro slave axis. (Main application version 0.63 or later)
53	Setting bit pattern 1 of each axis	0	0H ~ FFFFFFFFH		
54	Travel distance for push stop detection at home return	20	1 ~ 99999	0.001 mm	
55	Travel distance for push stop detection at positioning	30	1 ~ 99999	0.001 mm	
56	Push-abort deviation ratio at home return	2000	1 ~ 99999		Deviation is compared against “Steady-state deviation of push speed + Push-speed pulse speed x Abort deviation ratio.”
57	Push-abort deviation ratio at positioning	5000	1 ~ 99999		Deviation is compared against “Steady-state deviation of push speed + Push-speed pulse speed x Abort deviation ratio.”
58	Positioning band	100	1 ~ 9999	0.001 mm	*Related information: Axis-specific parameter No. 52
59	Allowable deviation error ratio (Maximum speed pulse ratio)	85	1 ~ 99		Deviation is compared against “Steady-state deviation of maximum operating speed of each axis + Pulse speed of maximum operating speed of each axis x Allowable deviation error ratio.”
60	Position gain	30	1 ~ 9999	/s	
61	FAG	0	0 ~ 999		
62	Synchro FB gain	77	0 ~ 1000		
63	Stop special output range	1	0 ~ 9999	Pulse	Invalid if “0” is set.
64	Stop special output value	1	0 ~ 999	DRVVR	
65	Mating synchro-axis number	0	0 ~ 8		Must be input for both axes. (Of the axis pair, the axis with the smaller axis number becomes the master axis. Both axes must have the same resolution characteristics. Commands cannot be issued to the slave axis.) * The actuators must be installed by physically aligning the “positions at the end of home return” of the synchro master and slave axes. (Invalid if “0” is set)
66	Mode selection for rotational movement axis	0	0 ~ 5		0: Normal, 1: Index mode
67	Short-cut control selection for rotational movement axis	0	0 ~ 5		0: Do not select, 1: Select (Valid only in the index mode AND when an incremental encoder is used)
68	Mode selection for linear movement axis	0	0 ~ 5		0: Normal, 1: Infinite-stroke mode (Note: Positioning boundary applies. This setting can be specified only when an incremental encoder is used.)
69	Torque limit upon stopping of synchro slave axis	0	0 ~ 70	%	Not limited, if “0.” Effective only when specified for the synchro slave axis. * Related information: Axis-specific parameter No. 52 (Main application version 0.59 or later)
70	For future expansion	0	Reference only		
71	For future expansion	0	Reference only		
72	DRVVR + offset	0	Reference only	DRVVR	(Change prohibited) To maintain symmetry of the positive and negative sides.
73	DRVVR – offset	0	Reference only	DRVVR	(Change prohibited) To maintain symmetry of the positive and negative sides.
74	For future expansion	0	Reference only		
75	For future expansion	0	Reference only		

Axis-Specific Parameters

No	Parameter name	Default value (Reference)	Input range	Unit	Remarks
76	Home-adjustment parameter set selection	1	Reference only		(Change prohibited) 0: P21 = Phase-Z evacuation distance at INC home return P12 = Ideal phase-Z position coordinate 1: P32 is read automatically even when P33 = 0. P33 = 0 indicates “actual distance.” P21 = Offset travel at home return P12 = Coordinate achieved by offset travel at home return P26 = Invalid (To facilitate adjustment)
77	Synchro S pulse	3	0 ~ 99999	Pulse	*Related information: Axis-specific parameter No. 52
78	Maximum takeoff command amount	0	-3000 ~ 3000	0.001 mm	Maximum lift command amount before brake unlock (Input with sign) (Suppression of momentary drop upon servo ON when a heavy object is placed) * Important: Input using the same sign as the rising coordinate direction. (0.100 mm to 0.500 mm in absolute value as a guideline) * The servo-ON check time (axis-specific parameter No. 30) must also be extended (approx. 1000 to 1500 msec) to provide a sufficient time for rise-direction torque to follow. (Valid only when installation of brake is specified.)
79	Actual takeoff check distance	5	0 ~ 3000	0.001 mm	Absolute value input
80	Maximum forced-feed range	0	0 ~ 9999	0.001 mm	For reduction of settling time. (Invalid range if “0” is set) (Approx. 1.000 mm as a guideline)
81	Minimum forced-feed range	200	0 ~ 9999	0.001 mm	
82	Medium forced-feed range	600	0 ~ 9999	0.001 mm	
83	Absolute synchro slave-axis initialization cancellation	0	0 ~ 5		Valid only with a synchro slave axis.
84	Maximum synchronization correction speed of synchro slave axis	5	0 ~ 100	mm/sec	Maximum travel speed for synchronization position correction of slave axis. Valid only with a synchro slave axis. * Note: Not limited by the safety speed.
85	Home-return acceleration/ deceleration	15	1 ~ 300	0.01 G	
86	Zone 1 MAX	0	-99999999 ~ 99999999	0.001 mm	Valid only when MAX > MIN. * Must be inside the range for at least 3 msec.
87	Zone 1 MIN	0	-99999999 ~ 99999999	0.001 mm	Valid only when MAX > MIN. * Must be inside the range for at least 3 msec.
88	Zone 1 output number	0	0 ~ 899		Physical output port or global flag (Output is invalid if “0” is input; multiple specification is invalid)
89	Zone 2 MAX	0	-99999999 ~ 99999999	0.001 mm	Valid only when MAX > MIN. * Must be inside the range for at least 3 msec.
90	Zone 2 MIN	0	-99999999 ~ 99999999	0.001 mm	Valid only when MAX > MIN. * Must be inside the range for at least 3 msec.
91	Zone 2 output number	0	0 ~ 899		Physical output port or global flag (Output is invalid if “0” is input; multiple specification is invalid)
92	Zone 3 MAX	0	-99999999 ~ 99999999	0.001 mm	Valid only when MAX > MIN. * Must be inside the range for at least 3 msec.
93	Zone 3 MIN	0	-99999999 ~ 99999999	0.001 mm	Valid only when MAX > MIN. * Must be inside the range for at least 3 msec.
94	Zone 3 output number	0	0 ~ 899		Physical output port or global flag (Output is invalid if “0” is input; multiple specification is invalid)
95	Zone 4 MAX	0	-99999999 ~ 99999999	0.001 mm	Valid only when MAX > MIN. * Must be inside the range for at least 3 msec.
96	Zone 4 MIN	0	-99999999 ~ 99999999	0.001 mm	Valid only when MAX > MIN. * Must be inside the range for at least 3 msec.

Axis-Specific Parameters

No	Parameter name	Default value (Reference)	Input range	Unit	Remarks
97	Zone 4 output number	0	0 ~ 899		Physical output port or global flag (Output is invalid if “0” is input; multiple specification is invalid)
98 ~ 103	(For expansion)	0	~		
104	Target axis specification for multiple-slider near-miss detection	0H	0H ~ FFFFFFFFH		Bits 0 to 3: Mating axis number of near-miss detection target (on the positive side of the coordinate system of the target axis) Bits 4 to 7: Mating axis number of near-miss detection target (on the negative side of the coordinate system of the target axis) * The mating axis must be entered for each axis. (Of the pair, the axis with the smaller axis number becomes the main axis for the sake of convenience.) * For each axis, only an axis whose resolution and other related characteristics are the same can be specified as a mating axis. * In the case of synchro axes, always specify the synchro master axis. (Specification of the synchro slave axis is prohibited.) * Specify “0” if no adjacent slider is present on the applicable side of the coordinate system of the target axis.
105	Effective stroke of multiple sliders	0	0 ~ 99999999	0.001 mm	Effective stroke from the “soft limit” at the end (far end) of the operation range of either axis specified as a target axis for multiple-slider near-miss detection (Of the multiple sliders, only the parameter for the master axis is valid.) * The “soft limit” for each axis must be set correctly to prevent physical slider interference at the far end. (This soft limit is used as a standard for near-miss detection calculation.)
106	Emergency deceleration margin upon multiple-slider near-miss detection	5	0 ~ 999	0.01 G	
107	Multiple-slider setting: Bit pattern 1	12H	0H ~ FFFFFFFFH		Bits 0 to 3: Margin for multiple-slider actual position near-miss detection (mm) (Of the multiple sliders, only the parameter for the master axis is valid.) Bits 4 to 7: Margin for multiple-slider command position near-miss detection (mm) (Of the multiple sliders, only the parameter for the master axis is valid.)
108	Positioning control switching band for synchro slave axis	5000	1 ~ 99999	0.001 mm	Effective only when specified for the synchro slave axis. * Related information: Axis-specific parameter No. 52 (Main application version 0.62 or later)
109 ~ 118	(For expansion)	0	~		
119	FSG	0	0 ~ 100		
120	FFF	10	0 ~ 100		* Change is prohibited unless instructed by the manufacturer.
121 ~ 170	(For expansion)	0	~		
171		0	~		
172		0	~		
173		0	~		
174		0	~		
175		0	~		
176		0	~		
~ 200	(For expansion)	0	~		

4. Driver Card Parameters

No.	Parameter name	Default value (Reference)	Input range	Unit	Remarks
1	Type (upper) (Manufacturing information)	Space	Reference only		For adjustment by the manufacturer
2	Type (middle) (Manufacturing information)	Space	Reference only		For adjustment by the manufacturer
3	Type (lower) (Manufacturing information)	Space	Reference only		For adjustment by the manufacturer
4	Manufacturing data (Manufacturing information)	Space	Reference only		For adjustment by the manufacturer
5	Manufacturing data (Manufacturing information)	Space	Reference only		For adjustment by the manufacturer
6	Manufacturing data (Manufacturing information)	Space	Reference only		For adjustment by the manufacturer
7	Manufacturing data (Manufacturing information)	Space	Reference only		For adjustment by the manufacturer
8	Board type (Function information)	31	Reference only		For adjustment by the manufacturer
9	Installation type word 1 (Function information)	0101H	Reference only		For adjustment by the manufacturer
10	Installation type word 2 (Function information)	0000H	Reference only		For adjustment by the manufacturer
11	(Function information)	0000H	Reference only		
12	Software version (Function information)	0000H	Reference only		For adjustment by the manufacturer
13	Maximum supported motor ID number (Function information)	0000H	Reference only		For adjustment by the manufacturer
14	Motor control data use selection (Function information)	0000H	Reference only		For adjustment by the manufacturer
15	(Function information)	0000H	Reference only		For adjustment by the manufacturer
16	(Function information)	0000H	Reference only		For adjustment by the manufacturer
17	(Function information)	0000H	Reference only		For adjustment by the manufacturer
18	(Function information)	0000H	Reference only		For adjustment by the manufacturer
19	(Function information)	0000H	Reference only		For adjustment by the manufacturer
20	(Function information)	0000H	Reference only		For adjustment by the manufacturer
21	(Function information)	0000H	Reference only		For adjustment by the manufacturer
22	(Function information)	0000H	Reference only		For adjustment by the manufacturer
23	(Configuration information)	0000H	Reference only		For adjustment by the manufacturer
24	Configuration capacity (rated motor output) (compatible with E, priority on E) (configuration information)	003CH	Reference only		For adjustment by the manufacturer
25	Configuration voltage (motor voltage) (compatible with E, priority on E) (configuration information)	00C8H	Reference only		For adjustment by the manufacturer
26	Motor/encoder configuration information (compatible with E, priority on E) (configuration information)	0000H	Reference only		For adjustment by the manufacturer
27	(Configuration information)	0000H	Reference only		For adjustment by the manufacturer
28	(Configuration information)	0000H	Reference only		For adjustment by the manufacturer

Driver Card Parameters

No.	Parameter name	Default value (Reference)	Input range	Unit	Remarks
29	Motor/encoder characteristic word (compatible with E, priority on E) (configuration information)	0004H	Reference only		For adjustment by the manufacturer
30	Motor/encoder control word 1 (compatible with E, priority on E) (configuration information)	5000	Reference only		For adjustment by the manufacturer
31	Motor/encoder control word 2 (compatible with E, priority on E) (configuration information)	0000H	Reference only		For adjustment by the manufacturer
32	Motor/encoder control word 3 (configuration information)	2	Reference only		For adjustment by the manufacturer
33	Motor/encoder control word 4 (configuration information)	14H	Reference only		For adjustment by the manufacturer
34	Motor/encoder control word 5 (configuration information)	0000H	Reference only		For adjustment by the manufacturer
35	(Configuration information)	0000H	Reference only		For adjustment by the manufacturer
36	(Configuration information)	0000H	Reference only		For adjustment by the manufacturer
37	(Configuration information)	0000H	Reference only		For adjustment by the manufacturer
38	Push torque limit at positioning	70	0 ~ 70	%	
39	Push torque limit at home return	100	0 ~ 150	%	
40	Maximum torque limit	300	10 ~ 400	%	*The maximum value that can be set varies depending on the motor, etc.
41	Dynamic brake operation specification	0	0 ~ 1		0: Disable, 1: Enable
42	Software DB operation specification	0	0 ~ 1		0: Enable, 1: Disable
43	Speed loop gain	500	1 ~ 32767		Proportional gain
44	Speed loop integration time constant	30	0 ~ 1000		Integral gain
45	Torque filter time constant	0	0 ~ 2500		
46	Current control band number	4	0 ~ 4		
47 ~ 52	(For expansion)	0H	0000H ~ FFFFH		
53	Current control word 1	0H	Reference only		For adjustment by the manufacturer
54	Current control word 2	0H	Reference only		For adjustment by the manufacturer
55	Current control word 3	0H	Reference only		For adjustment by the manufacturer
56	Current control word 4	0H	Reference only		For adjustment by the manufacturer
57	Current control word 5	0H	Reference only		For adjustment by the manufacturer
58	Current control word 6	0H	Reference only		For adjustment by the manufacturer
59	Current control word 7	0H	0000H ~ FFFFH		Bits 0 to 15: Reserved bits
60	Current control word 8	0H	0000H ~ FFFFH		Bits 0 to 15: Reserved bits

Driver Card Parameters

No.	Parameter name	Default value (Reference)	Input range	Unit	Remarks
61 ~ 67	(For expansion)	0H	0000H ~ FFFFH		
68	Current control query information 01	0H	Reference only		For adjustment by the manufacturer
69	Current control query information 02	0H	Reference only		For adjustment by the manufacturer
70	Current control query information 03	0H	Reference only		For adjustment by the manufacturer
71	Current control query information 04	0H	Reference only		For adjustment by the manufacturer
72	Current control query information 05	0H	Reference only		For adjustment by the manufacturer
73	Current control query information 06	0H	Reference only		For adjustment by the manufacturer
74	Current control query information 07	0H	Reference only		For adjustment by the manufacturer
75	Current control query information 08	0H	Reference only		For adjustment by the manufacturer
76	Current control query information 09	0H	Reference only		For adjustment by the manufacturer
77	Current control query information 10	0H	Reference only		For adjustment by the manufacturer
78	Current control query information 11	0H	Reference only		For adjustment by the manufacturer
79	Current control query information 12	0H	Reference only		For adjustment by the manufacturer
80	Current control query information 13	0H	Reference only		For adjustment by the manufacturer
81	Current control query information 14	0H	Reference only		For adjustment by the manufacturer
82	Current control query information 15	0H	Reference only		For adjustment by the manufacturer
83	Current control query information 16	0H	Reference only		For adjustment by the manufacturer
84	Current control query information 17	0H	Reference only		For adjustment by the manufacturer
85	Current control query information 18	0H	Reference only		For adjustment by the manufacturer
86	Current control query information 19	0H	Reference only		For adjustment by the manufacturer
87	Current control query information 20	0H	Reference only		For adjustment by the manufacturer
88	Current control query information 21	0H	Reference only		For adjustment by the manufacturer
89	Current control query information 22	0H	Reference only		For adjustment by the manufacturer
90	Current control query information 23	0H	Reference only		For adjustment by the manufacturer
91	Current control query information 24	0H	Reference only		For adjustment by the manufacturer
92	Current control query information 25	0H	Reference only		For adjustment by the manufacturer
93	Current control query information 26	0H	Reference only		For adjustment by the manufacturer
94	Current control query information 27	0H	Reference only		For adjustment by the manufacturer
95	Current control query information 28	0H	Reference only		For adjustment by the manufacturer
96	Current control query information 29	0H	Reference only		For adjustment by the manufacturer
97	Current control query information 30	0H	Reference only		For adjustment by the manufacturer

5. Encoder Parameters

No.	Parameter name	Default value (Reference)	Input range	Unit	Remarks
1	Type (upper) (Manufacturing information)	Space	Reference only		
2	Type (middle) (Manufacturing information)	Space	Reference only		
3	Type (lower) (Manufacturing information)	Space	Reference only		
4	Manufacturing data (Manufacturing information)	Space	Reference only		
5	Manufacturing data (Manufacturing information)	Space	Reference only		
6	Manufacturing data (Manufacturing information)	Space	Reference only		
7	Manufacturing data (Manufacturing information)	Space	Reference only		
8	Board type (Function information)	80	Reference only		
9	Configuration capacity (rated motor output) (compatible with X/E) (function information)	003CH	Reference only		For adjustment by the manufacturer
10	Configuration voltage (motor voltage) (compatible with X/E) (function information)	00C8H	Reference only		For adjustment by the manufacturer
11	Motor/encoder configuration information (compatible with X/E) (function information)	0000H	Reference only		For adjustment by the manufacturer
12	Encoder resolution (upper word) (compatible with X/E) (function information)	0002H	Reference only		For adjustment by the manufacturer
13	Encoder resolution (lower word) (compatible with X/E) (function information)	0000H	Reference only		For adjustment by the manufacturer
14	Motor/encoder characteristic word (compatible with X/E) (function information)	0004H	Reference only		For adjustment by the manufacturer
15	Motor/encoder control word 1 (function information)	3834	Reference only	0.1 K (Kelvin = temperature unit)	For adjustment by the manufacturer
16	Motor/encoder control word 2 (function information)	0000H	Reference only		For adjustment by the manufacturer
17	Motor/encoder control word 3 (function information)	0000H	Reference only		For adjustment by the manufacturer
18	Motor/encoder control word 4 (function information)	0001H	Reference only		For adjustment by the manufacturer
19	(Function information)	0000H	Reference only		For adjustment by the manufacturer
20	(Function information)	0000H	Reference only		For adjustment by the manufacturer
21	(Function information)	0000H	Reference only		For adjustment by the manufacturer
22	(Function information)	0000H	Reference only		For adjustment by the manufacturer
23 ~ 30	Card parameter (by board type)	0000H	Reference only		For adjustment by the manufacturer

6. I/O Devices

No.	Parameter name	Default value (Reference)	Input range	Unit	Remarks
1	Type (upper) (Manufacturing information)	Space	Reference only		For adjustment by the manufacturer
2	Type (middle) (Manufacturing information)	Space	Reference only		For adjustment by the manufacturer
3	Type (lower) (Manufacturing information)	Space	Reference only		For adjustment by the manufacturer
4	Manufacturing data (Manufacturing information)	Space	Reference only		For adjustment by the manufacturer
5	Manufacturing data (Manufacturing information)	Space	Reference only		For adjustment by the manufacturer
6	Manufacturing data (Manufacturing information)	Space	Reference only		For adjustment by the manufacturer
7	Manufacturing data (Manufacturing information)	Space	Reference only		For adjustment by the manufacturer
8	Board type (Function information)	0	Reference only		For adjustment by the manufacturer
9	Function information 01 (by board type)	0000H	Reference only		For adjustment by the manufacturer
10	Function information 02 (by board type)	0000H	Reference only		For adjustment by the manufacturer
11	Function information 03 (by board type)	0000H	Reference only		For adjustment by the manufacturer
12	Function information 04 (by board type)	0000H	Reference only		For adjustment by the manufacturer
13	Function information 05 (by board type)	0000H	Reference only		For adjustment by the manufacturer
14	Function information 06 (by board type)	0000H	Reference only		For adjustment by the manufacturer
15	Function information 07 (by board type)	0000H	Reference only		For adjustment by the manufacturer
16	Function information 08 (by board type)	0000H	Reference only		For adjustment by the manufacturer
17	Function information 09 (by board type)	0000H	Reference only		For adjustment by the manufacturer
18	Function information 10 (by board type)	0000H	Reference only		For adjustment by the manufacturer
19	Function information 11 (by board type)	0000H	Reference only		For adjustment by the manufacturer
20	Function information 12 (by board type)	0000H	Reference only		For adjustment by the manufacturer
21	Function information 13 (by board type)	0000H	Reference only		For adjustment by the manufacturer
22	Function information 14 (by board type)	0000H	Reference only		For adjustment by the manufacturer
23 ~ 52	Device parameter (by board type)	0000H	Reference only		For adjustment by the manufacturer
53 ~ 82	Query information 01 to 30 (by board type)	0000H	Reference only		For adjustment by the manufacturer

7. Other Parameters

No.	Parameter name	Default value (Reference)	Input range	Unit	Remarks
1	Auto-start program number	0	0 ~ 64		(Invalid if “0” is set)
2	I/O processing program number at operation/program abort	0	0 ~ 64		The start trigger is determined from the “I/O processing program start type at operation/program abort.” (Note: This program will be started before confirming an abort of other programs.) (Invalid if “0” is set) * If the setting is valid, the number of user program tasks that can be used will decrease by 1.
3	I/O processing program number at all operation pause	0	0 ~ 64		This program will be started when an all-operation-pause command is issued due to an all-operation-pause factor. (Only when a program is running) (Invalid if “0” is set) * If the setting is valid, the number of user program tasks that can be used will decrease by 1.
4	Program abort type at error	0	0 ~ 5		0: Cancel only the program in which an error of operation-cancellation level or higher has generated. (If the error requires the drive source to be cut off or a servo-OFF or all-axis servo-OFF request to be issued, all programs other than the “I/O processing program at operation/program abort” will be cancelled.) 1: Cancel all programs other than the “I/O processing program at operation/program abort” when an error of operation-cancellation level or higher has generated.
5	I/O processing program start type at operation/program abort	0	0 ~ 5		0: When all-operation-cancellation factor has generated (Only when a program is running) 1: When all-operation-cancellation factor has generated (Always) 2: All-operation-cancellation factor + Error of operation-cancellation level or higher (“Other parameter No. 4 = 0” is considered) (Only when a program is running) 3: All-operation-cancellation factor + Error of operation-cancellation level or higher (“Other parameter No. 4 = 0” is considered) (Always)
6	PC/TP reconnection delay at software reset	14000	1 ~ 99999	msec	* The setting will become effective after the controller, PC or TP is restarted.
7 ~ 8	(For expansion)	0			
9	For future expansion (change prohibited)	0	0 ~ 2		
10	Emergency-stop recovery type	0	0 ~ 4		0: Abort operations/programs 1: Recovery after reset 2: Operation continued (Only during automatic operation. * Operation commands from the PC/TP will be aborted on the PC/TP side.) 3: Abort operations/programs (Software reset when the emergency stop is reset. The home-return completion status of incremental-encoder axes will be reset (EG approximation swap).) 4: Abort operations/programs (Error reset (only with an error of operation-cancellation level or lower) and auto-start program start (only if AUTO mode AND I/O parameter No. 33 = 1 AND I/O parameter No. 44 ≠ 1 AND all-operation-cancellation factor is not present) when the emergency stop is reset). There must be a minimum interval of 1 second after an emergency stop is actuated before it is reset. The home-return completion status of incremental-encoder axes will be retained.
11	Enable switch (deadman/enable switch) recovery type	0	0 ~ 2		0: Abort operations/programs 1: Recovery after reset 2: Operation continued (Only during automatic operation. * Operation commands from the PC/TP will be aborted on the PC/TP side.)

PC: PC software
TP: Teaching pendant

Other Parameters

No.	Parameter name	Default value (Reference)	Input range	Unit	Remarks
12	Automatic operation recognition type	0	0 ~ 3		0: Program is running AND all-operation-cancellation factor is not present 1: [Program is running OR in AUTO mode] AND all-operation-cancellation factor is not present
13 ~ 19	(For expansion)	0			
20	System-memory backup battery installation function type	2	0 ~ 2		0: Not installed (SEL global data/error lists cannot be recovered from the flash ROM) 1: Not installed (SEL global data/error lists can be recovered from the flash ROM) 2: Installed * When the power is turned on without battery installed, point data can be copied from the flash ROM. * Use of setting “1” will be prohibited for the time being due to limitations. * When point data is lost due to a battery error, the point data valid before the flash ROM was written can be restored → Input “0” (not installed) and transfer the setting to the controller, and then perform a software reset without writing the flash ROM. The point data last written to the flash ROM will be restored. Thereafter, reset this parameter to the original value. (No remedy is available for recovery of SEL global data/error lists.)
21	Manual mode type	0	0 ~ 5		0: Always enable edit and SIO/PIO start (Initial condition after connection = With safety speed) 1: Select edit and start (with password) (EU, etc.) 2: Always enable edit and SIO/PIO start (Initial condition after connection = Without safety speed (cancellation)) * Referenced by the PC/TP.
22	Control use region	0	0 ~ 99		0: J, 1: E, 2: EU
23	PSIZ command function type	0	0 ~ 5		0: Maximum number of point data areas 1: Number of point data used
24	Local variable number for storing SEL communication command return code	99	1 ~ 99 1001 ~ 1099		
25 ~ 29	(For expansion)	0			
30	Option Password 00	0H	0H ~ FFFFFFFFH		HOME command option (Change prohibited) * Change is prohibited unless instructed by the manufacturer.
31	Option Password 01	0H	0H ~ FFFFFFFFH		Reserved (Change prohibited) * Change is prohibited unless instructed by the manufacturer.
32	Option Password 02	0H	0H ~ FFFFFFFFH		Reserved (Change prohibited) * Change is prohibited unless instructed by the manufacturer.
33 ~ 35	(For expansion)	0	0H ~ FFFFFFFFH		

Other Parameters

No.	Parameter name	Default value (Reference)	Input range	Unit	Remarks
36	PC/TP data protect setting (Program)	0H	0H ~ FFFFFFFFH		Bits 0 to 3: Protect type (0: Read/write, 1: Read only, 2: No read/write) Bits 4 to 7: Protect release method (0: Special operation) Bits 8 to 11: Protect range maximum number (1's place, BCD) Bits 12 to 15: Protect range maximum number (10's place, BCD) Bits 16 to 19: Protect range minimum number (1's place, BCD) Bits 20 to 23: Protect range minimum number (10's place, BCD) * Referenced by the PC/TP
37	PC/TP data protect setting (Position)	0H	0H ~ FFFFFFFFH		Bits 0 to 3: Protect type (0: Read/write, 1: Read only, 2: No read/write) Bits 4 to 7: Protect release method (0: Special operation) Bits 8 to 11: Protect range maximum number (10's place, BCD) Bits 12 to 15: Protect range maximum number (100's place, BCD) Bits 16 to 19: Protect range maximum number (1000's place, BCD) Bits 20 to 23: Protect range minimum number (10's place, BCD) Bits 24 to 27: Protect range minimum number (100's place, BCD) Bits 28 to 31: Protect range minimum number (1000's place, BCD) * The value in the 1's place is considered "0" for both the protect range maximum/minimum numbers. * Referenced by the PC/TP
38	PC/TP data protect setting (Symbol, parameter)	0H	0H ~ FFFFFFFFH		Bits 0 to 3: Protect type (Parameter) (0: Read/write, 1: Read only, 2: No read/write) Bits 4 to 7: Protect release method (Parameter) (0: Special operation) Bits 8 to 11: Protect type (Symbol) (0: Read/write, 1: Read only, 2: No read/write) Bits 12 to 15: Protect release method (Symbol) (0: Special operation) * Referenced by the PC/TP
39	(For future expansion)	0H	0H ~ FFFFFFFFH		

Other Parameters

No.	Parameter name	Default value (Reference)	Input range	Unit	Remarks
40	EEPROM information check type	83H	Reference only		0: Disable checksum, 1: Enable checksum Bit 0 = Driver Bit 1 = Encoder Bit 2 = I/O board Bits 3 to 6 = (For future expansion) Bit 7 = Power device 0: Do not use EEPROM, 1: Use EEPROM Bits 16 to 17 = (For future expansion) Bit 18 = I/O board Bits 19 to 23 = (For future expansion) (Bits 16 to 23: Main application version 0.21 or later)
41	Hardware information check type	0H	Reference only		Bits 0 to 7 = (For future expansion)
42	Hardware test type	6H	Reference only		0: Do not perform test, 1: Perform test Bit 0 = For future expansion Bit 1 = I/O slot I/F register write-read test Bit 2 = Driver ready check at reset
43	For future expansion	0H	0H ~ FFFFFFFFH		
44	(For expansion)	0			
45	Special start condition setting	0	0H ~ FFFFFFFFH		Bits 0 to 3: Enable start from PC/TP in AUTO mode = Used exclusively by the manufacturer (0: Do not enable, 1: Enable) Bits 4 to 7: PIO program start (Input port 000) Single start selection (0: Normal, 1: Single start) * When single start is selected, the next PIO program start (input port 000) will not be accepted as long as a program with the same program number as the one started by the last PIO program start (input port 000) is running. Bits 8 to 11: Permission of auto program start when all-operation-cancellation factor is present (0: Do not permit, 1: Permit) Bits 12 to 15: Permission of ON edge acceptance for PIO program start (input port 000) when all-operation-cancellation factor is present (0: Do not permit, 1: Permit) * This parameter specifies an ON-edge acceptance condition. If the starting condition is not satisfied, an “Error No. A1E: Start condition non-satisfaction error” will generate.

Other Parameters

No.	Parameter name	Default value (Reference)	Input range	Unit	Remarks
46	Other setting bit pattern 1	2001H	0H ~ FFFFFFFFH		Bits 0 to 3: Variable-value format type in response message to real-number/variable query (0: Big endian with four upper/lower binary-converted bytes reversed, 1: Big endian) Bits 4 to 7: Decimal-place rounding selection for real-number → integer-variable assignment in LET/TRAN commands (0: Do not round, 1: Round) Bits 8 to 11: For future expansion * Change strictly prohibited unless specified by the manufacturer. Bits 12 to 15: Selection of processing to be performed when subroutine first step input condition is not specified when TPCD command = 1 (0: Do not execute, 1: Execute, 2: Error) Bits 16 to 19: For future expansion Bits 20 to 23: Continuous recovery movement/operation resumption timing type (0: Resume operation after completion of continuous recovery movement of all axes using the same task (same as before), 1: Hold resumption of operation while any axis is performing continuous recovery operation (This does not mean the system will wait for completion of continuous recovery movement.)) (Main application version 0.47 or later)
47 ~ 48	(For expansion)	0			

Other Parameters

No.	Parameter name	Default value (Reference)	Input range	Unit	Remarks
49	Panel 7-segment display data type	0	0 ~ 9		0: Display controller status 1: Display motor current indicator The current pattern of each axis is displayed instead of “ready status” or “program run number.” “Minimum indicator-displayed axis number” (far-right column) is specified by “Other parameter No. 50.” (Main application version 0.09 or later) 0 < Motor current to rating ratio (%) ≤ 25 25 < Motor current to rating ratio (%) ≤ 50 50 < Motor current to rating ratio (%) ≤ 75 75 < Motor current to rating ratio (%) ≤ 100 100 < Motor current to rating ratio (%) ≤ 150 150 < Motor current to rating ratio (%) ≤ 200 200 < Motor current to rating ratio (%) 2: Display user information number (U001 to U999) The user information number is displayed instead of “ready status” or “program run number” only when the user information number is not “0.” “Global integer variable number for specifying user information number” is specified by “Other parameter No. 50.” (Main application version 0.09 or later)
50	Auxiliary specification for panel 7-segment display data type	0	-99999999 ~ 99999999		* Refer to the Remarks field for “Other parameter No. 49.”
51 ~ 100	(For expansion)	0			

8. Manual Operation Types

The selectable operation types will vary depending on the setting of the “Manual operation type” parameter (Other parameter No. 21).

(1) PC software

1. Setting = 0 (Always enable edit and SIO/PIO start)

Operation type	Password	Functions				
		Edit	Safety speed	Jog, move, continuous move	SIO program start	PIO program start
With safety speed	Not required.	○	○	○	○	○
Without safety speed	Not required.	○		○	○	○

2. Setting = 1 (Select edit and start (with password))

Operation type	Password	Functions				
		Edit	Safety speed	Jog, move, continuous move	SIO program start	PIO program start
Edit and jog	Not required.	○	○	○		
SIO start and jog (safety speed)	1817 (*1)		○	○	○	
SIO start and jog	1818 (*1)			○	○	
SIO/PIO start and jog	1819 (*1)			○	○	○

(*1) PC software version 0.0.6.0 or later (“0000” in versions 0.0.0.0 through 0.0.5.x)

(2) Teaching pendant

1. Setting = 0 (Always enable edit and SIO/PIO start)

Safety-speed enable selection	Password	Functions				
		Edit	Safety speed	Jog, move, continuous move	SIO program start	PIO program start
Enable	Not required.	○	○	○	○	○
Disable	Not required.	○		○	○	○

2. Setting = 1 (Select edit and start (with password))

Safety-speed enable selection	Password	Functions					
		Edit	Safety speed	Jog, move, continuous move	SIO program start	PIO program start	*2
Enable	Not required.	○	○	○	○	(*3)	
Disable	1818 (*1)	○		○	○	(*3)	

PIO start prohibition selection	Password	Functions					
		Edit	Safety speed	Jog, move, continuous move	SIO program start	PIO program start	*2
Prohibit	Not required.	○	(*4)	○	○		
Enable	1819 (*1)	○	(*4)	○	○	○	

(*1) Teaching pendant application version 0.02 or later (not supported by version 0.01 or earlier)
(*2) PIO program start is enabled only in modes other than the edit mode.
(*3) In accordance with the “PIO start prohibition selection” setting.
(*4) In accordance with the “Safety-speed enable” setting.

9. Use Examples of Key Parameters

You can add functions to those available under the factory settings or set dedicated functions to I/O ports, by changing the parameter values. Before changing a parameter, be sure to read the corresponding section in the List of Parameters.

Description	Action	Parameter setting	Manipulation/operation
Want to prevent errors relating to the standard I/O board and optional boards (DeviceNet, CC-Link, etc.). (Want to perform trial operation when boards are not wired, etc.)	I/O-board error monitor can be disabled to prevent errors from occurring.	Set “0” in the I/O parameter corresponding to the I/O board whose error monitor you wish to disable. Standard I/O (I/O1): I/O parameter No. 10 = 0 Expanded I/O1 (I/O2): I/O parameter No. 11 = 0 Expanded I/O2 (I/O3): I/O parameter No. 12 = 0 Expanded I/O3 (I/O4): I/O parameter No. 13 = 0	Set “0” in I/O parameter Nos. 10 and 11 to disable error monitor for the standard I/O (I/O1) and expanded I/O1 (I/O2) boards, respectively. Note: To operate a disabled I/O board, be sure to revert the parameter setting to “1.”
Want to execute restart (software reset) using an external input signal.	Input port No. 1 can be set as a restart input.	I/O parameter No. 31 = 1	Turning ON input port No. 1 for at least 1 second will execute restart.
Want to execute servo ON using an external input signal.	Input port No. 2 can be set as a servo ON input.	I/O parameter No. 32 = 1	Servo ON will be executed at the ON edge of input port No. 2. Servo OFF will be executed at the OFF edge.
Want to execute auto program start using an external input signal. (Under the default setting, the specified program will restart upon power ON or restart (software reset) in the AUTO mode.) (More steps will be required to execute auto program start.)	Input port No. 3 can be set as an auto program start input.	I/O parameter No. 33 = 2	The specified program will start at the ON edge of input port No.3. The program will be aborted at the OFF edge.
Want to execute pause using an external input signal.	Input port No. 6 can be set as a pause input. Input port No. 5 can be set as a pause reset input.	I/O parameter No. 36 = 1 I/O parameter No. 35 = 1	Turning OFF input port No. 6 will execute pause. Pause will be reset at the ON edge of input port No. 5 after turning ON input port No. 6. (Input port No. 6 is always ON.)
Want to reset errors using an external input signal (errors of operation-cancellation level or lower).	Input port No. 13 can be set as an error reset input.	I/O parameter No. 43 = 2	Errors will be reset at the ON edge of input port No 13.

<table>
<tr><th>Description</th><th>Action</th><th>Parameter setting</th><th>Manipulation/operation</th></tr>
<tr><td>Want to execute home return using an external input signal.</td><td>Input port No. 15 can be used as an home return input.</td><td>I/O parameter No. 45 = 1</td><td>Home return will be executed at the ON edge of input port No. 15. (Servo ON must be executed beforehand.)</td></tr>
<tr><td>Want to input program numbers from input ports in binary. (The default setting is BCD input.)</td><td>Program numbers can be input from input port Nos. 7 to 13 in binary.</td><td>I/O parameter No. 30 = 2</td><td></td></tr>
<tr><td>Want to check the level of the present error from an output port.
Want to check for emergency stop status from an output port.</td><td>Error level can be checked from the ON/OFF combination of output port Nos. 300 and 301.
Emergency stop status can be checked from ON/OFF of output port No. 302.</td><td>I/O parameter No. 46 = 2
I/O parameter No. 47 = 3
I/O parameter No. 48 = 2
(Parameter settings at shipment)</td><td>ON/OFF of output port Nos. 300 and 301 and corresponding error levels
<table><tr><th></th><th>300</th><th>301</th></tr><tr><td>Message level or lower</td><td>○</td><td>○</td></tr><tr><td>Operation-cancellation level</td><td>●</td><td>○</td></tr><tr><td>Cold-start level</td><td>●</td><td>●</td></tr></table>○: ON ●: OFF

Output port No. 302 being OFF indicates an emergency stop status.
<table><tr><th></th><th>302</th></tr><tr><td>Emergency stop actuated</td><td>●</td></tr><tr><td>Emergency stop not actuated</td><td>○</td></tr></table>Note) Parameter settings at shipment</td></tr>
<tr><td>Want to output signal during the AUTO mode.</td><td>Output port No. 303 can be set as an AUTO mode output signal.</td><td>I/O parameter No. 49 = 1</td><td>Output port No. 303 will turn ON during the AUTO mode.</td></tr>
<tr><td>Want to output signal during automatic operation.</td><td>Output port No. 303 can be set as an automatic operation output.</td><td>I/O parameter No. 49 = 2</td><td>Output port No. 303 will turn ON during automatic operation.</td></tr>
<tr><td>Recognition of automatic operation:
Recognition of automatic operation can be changed using the setting of other parameter No. 12.</td><td>• Recognize automatic operation if a program is running (either in the MANU or AUTO mode).
• Recognize automatic operation if a program is running OR in the AUTO mode (regardless of whether or not a program is running).
In either case, all-operation-cancellation factor must not be present.
One of the conditions is recognized as automatic operation.</td><td>• Other parameter No. 12 = 0
Recognize automatic operation if a program is running.
• Other parameter No. 12 = 1
Recognize automatic operation if a program is running OR in the AUTO mode.
• “All-operation-cancellation factor is not present” means errors of operation-cancellation level or higher are not present AND emergency-stop signal is not input AND safety-gate signal is not input AND deadman switch is ON (teaching-pendant option).</td><td></td></tr>
</table>

Description	Action	Parameter setting	Manipulation/operation
Want to output signal when all valid axes are at their home.	Output port No. 304 can be set as a signal indicating that all valid axes are at their home. Note: Do not use a HOME command when the controller is of the absolute specification.	I/O parameter No. 50 = 1	Output port No. 304 will turn ON when all valid axes are at their home.
Want to output signal when all valid axes have completed home return.	Output port No. 304 can be set as a signal indicating that all valid axes have completed home return.	I/O parameter No. 50 = 2	Output port No. 304 will turn ON when all valid axes have completed home return.
Want to output warning signal when the system-memory backup battery voltage is low.	Output port No. 313 can be set as a signal warning that the system-memory backup battery voltage is low.	I/O parameter No. 59 = 1	Output port No. 313 will turn ON when the system-memory backup battery voltage is low.
Want to output warning signal when the absolute-encoder backup battery voltage is low.	Output port No. 314 can be set as a signal warning that the absolute-encoder backup battery voltage is low. (This function is not supported on early units. The main application version must be 0.28 or later.)	I/O parameter No. 60 = 1	Output port No. 314 will turn ON when the absolute-encoder backup battery voltage is low. The output will remain ON until the power is reconnected or controller is restarted.
Want to release brake using an external input signal.	A general-purpose input port can be set as a brake forced-release input (dedicated input). Set a desired input port number in the applicable parameter.	Set a desired input port number in the I/O parameter corresponding to the target axis number. Correspondence of brake-releasing axis number and parameter number: Axis 1: I/O parameter No. 62 Axis 2: I/O parameter No. 63 Axis 3: I/O parameter No. 64 Axis 4: I/O parameter No. 65 Setting example) To set input port No. 12 as the brake forced-release input for axis 3, set as follows: I/O parameter No. 64 = 12	Brake will be forcibly released when the applicable port turns ON. ← Brake of axis 3 will be forcibly released when input port No. 12 turns ON.
Want to retain output status while emergency-stop signal is input or the safety gate is open.	Minimum and maximum port numbers indicating the output ports you wish to retain can be set.	I/O parameter No. 70 = Output port number MIN I/O parameter No. 71 = Output port number MAX Setting example) To retain output ports from port Nos. 303 through 315, set as follows: I/O parameter No. 70 = 303 I/O parameter No. 71 = 315	← The status of output port Nos. 303 through 315 will be retained while emergency-stop signal is input or the safety gate is open.

Description	Action	Parameter setting	Manipulation/operation
Want to start programs while emergency-stop signal is input or the safety gate is open. Programs to be started are I/O processing or calculation programs that do not command actuator operation (PIO processing programs).	A PIO processing program to start can be set. Set in the applicable parameters a desired PIO processing program as well as minimum and maximum port numbers indicating the output ports at which the program will be processed.	Other parameter No. 2 = PIO processing program number I/O parameter No. 70 = Output port number MIN I/O parameter No. 71 = Output port number MAX Setting example) To start program No. 5 that involves processing at output port Nos. 303 through 315, set as follows: Other parameter No. 2 = 5 I/O parameter No. 70 = 303 I/O parameter No. 71 = 315	← Program No. 5 will start while emergency-stop signal is input or the safety gate is open. Output port Nos. 303 through 315 can be used for processing.
Want to switch between AUTO and MANU modes using an input port.	A general-purpose input port can be set as a mode switching input (dedicated input). Set a desired input port number in I/O parameter No. 79.	I/O parameter No. 79 = Input port number	Set the mode switch to the AUTO side. The AUTO mode will be enabled when the specified input port turns OFF, and the MANU mode will be enabled when the input port turns ON. If the mode switch is set to the MANU side, the MANU mode will be enabled regardless of ON/OFF of this input port. This function is available on controllers shipped in or after 2003.
Want to automatically execute restart (software reset) after the emergency stop is reset, and start the auto-start program.	The emergency-stop recovery type can be set to “Abort operations/programs (Software reset when the emergency stop is reset).”	Other parameter No. 10 = 3 I/O parameter No. 33 = 1	After the emergency-stop button is released, the system will automatically execute restart (software reset) and start the auto-start program.
Want to automatically execute error reset after the emergency stop is reset, and start the auto-start program.	The emergency-stop recovery type can be set to “Abort operations/programs (Error reset and auto program start when the emergency stop is reset).”	Other parameter No. 10 = 4 I/O parameter No. 33 = 1 I/O parameter No. 44 ≠ 1	After the emergency-stop button is released, the system will automatically execute error reset and start the auto-start program.

Description	Action	Parameter setting	Manipulation/operation
Want to continue actuator operation after the emergency stop is reset (want to resume actuator operation from the part stopped due to emergency stop input). Programs other than the one commanding actuator operation remain running while emergency-stop signal is input. (Programs not commanding actuator operation remain running while emergency-stop signal is input. The program commanding actuator operation will remain running until the execution step reaches an operation command.)	The emergency-stop recovery type can be set to “Operation continued.”	Other parameter No. 10 = 2 I/O parameter No. 35 = 1 (Input port No. 5 is set as a pause reset input.) I/O parameter No. 31 = 1 (Input port No. 1 is set as a restart input. This is to provide a means of canceling the operation.)	After the emergency-stop button is released, actuator operation will continue at the ON edge of input port No. 5. To discontinue the operation, turn ON input port No. 1 for at least 1 second to execute restart, without executing ON-edge input to input port No. 5.
Do not want to use a system-memory backup battery.	The controller can be used without installing a system-memory backup battery.	Other parameter No. 20 = 0	In this setting, SEL global data will be cleared when the main power is turned off. In addition, even after running a program that rewrites position data, the previous position data will be restored once the main power is turned off or the application is restarted (software reset). To retain the new position data, the data must be written to the flash ROM in the MANU mode before turning off the main power or restarting the application. Be sure to refer to 2, “When the system-memory backup battery is not used,” in Chapter 1 of Part 3.

<table>
<tr><th>Description</th><th>Action</th><th>Parameter setting</th><th>Manipulation/operation</th></tr>
<tr>
<td>Want to output signal when the actuator enters a specified area (zone).</td>
<td>A desired actuator zone can be set for each axis. A desired output port to turn ON when the axis enters the zone can be set for each axis. A maximum of four zones can be set (zones 1 to 4).
Max. value of zone 1:
Axis-specific parameter No. 86
Min. value of zone 1:
Axis-specific parameter No. 87
Zone 1 output port number:
Axis-specific parameter No. 88

Max. value of zone 2:
Axis-specific parameter No. 89
Min. value of zone 2:
Axis-specific parameter No. 90
Zone 2 output port number:
Axis-specific parameter No. 91

Max. value of zone 3:
Axis-specific parameter No. 92
Min. value of zone 3:
Axis-specific parameter No. 93
Zone 3 output port number:
Axis-specific parameter No. 94

Max. value of zone 4:
Axis-specific parameter No. 95
Min. value of zone 4:
Axis-specific parameter No. 96
Zone 4 output port number:
Axis-specific parameter No. 97</td>
<td>Setting example) Set the area illustrated below as zone 1:
Axis 1: Output port No. 311 will turn ON when the axis enters the area between 150 and 200 mm.
Axis 2: Output port No. 312 will turn ON when the axis enters the area between 75 and 125 mm.
 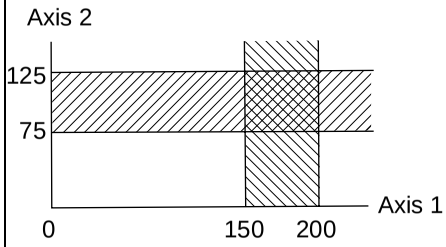

<table>
<tr><th></th><th>Axis 1</th><th>Axis 2</th><th></th></tr>
<tr><td>Axis-specific parameter No. 86</td><td>200000</td><td>125000</td><td>*</td></tr>
<tr><td>Axis-specific parameter No. 87</td><td>150000</td><td>75000</td><td>*</td></tr>
<tr><td>Axis-specific parameter No. 88</td><td>311</td><td>312</td><td></td></tr>
</table>
*: Max. and min. values are input in units of 0.001 mm.</td>
<td>For the output signal to be processed, the axes must stay for at least 3 msec in the zone. Duplicate output port numbers cannot be specified.

← : Output port No. 311 turns ON.
← : Output port No. 312 turns ON.</td>
</tr>
</table>

⊙ Combination Table of X-SEL Linear/Rotary Control Parameters

Axis-specific parameter No. 1, Axis operation type	Axis-specific parameter No. 68, Mode selection for linear movement axis	Axis-specific parameter No. 66, Mode selection for rotational movement axis	Axis-specific parameter No. 67, Short-cut control selection for rotational movement axis	Permitted encoder processing method			Expression of current position (approx.)	Axis-specific parameter No. 7, Soft limit +	Axis-specific parameter No. 8, Soft limit -	Axis-specific parameter No. 44, Length measurement correction	Axis-specific parameter No. 47, Screw lead	Axis-specific parameter No. 50, Gear ratio numerator	Axis-specific parameter No. 51, Gear ratio denominator	Input unit
				ABS	Simulated INC	INC								
0 (Linear movement axis)	0 (Normal mode)	Invalid	Invalid	○	○	○	Counter range	Valid	Valid	Valid	Valid	Valid	Valid	• Distance mm • Speed mm/sec • Acceleration/ deceleration G
	1 (Infinite-stroke mode) * Duty cycle timeout check must be reviewed.			X	○	○	-10000 ~ 9999.999 (rotary)	Invalid (Note)	Invalid (Note)					
1 (Rotational movement axis)	Invalid	0 (Normal mode)	0 (Short-cut control not selected) * "0" must be specified if the normal mode is selected.	○	○	○	Counter range	Valid	Valid	Invalid	Invalid	Valid	Valid	• Angle mm → deg • Angular speed mm/sec → deg/sec • Angular acceleration/deceleration G = 9807 mm/sec2 → 9807 deg/sec2 = 9807 x 2 π/360 rad/sec2 * A "deg" value indicates the angle of the rotating body at the end.
		1 (Index mode)	0 (Short-cut control not selected)	○	○	○	Counter range	Invalid (fixed to 359.999 internally)	Invalid (fixed to 0 internally)					
			1 (Short-cut control selected)	X	○	○	0 ~ 359.999 (rotary)							

(Note): Any positioning command other than "JXWX" exceeding a coordinate range from approx. –9990 to 9990 will generate an "Error No. CBC, Target-locus data boundary over error."
Executing any positioning command other than "JXWX" outside a coordinate range from approx. –9990 to 9990 will generate an "Error No. CC5, Positioning boundary pull-out error."

⊙ Error Level Control

Error level	System error assignment source	Error No. (HEX)	Display (7-segment display, etc.)	Error list (Application only)	Error LED output (MAIN only)	Program run (Application only)		Error reset (Application only)	Remarks
						Other parameter No. 4 = 0	Other parameter No. 4 = 1		
Secret level	MAIN application	800 ~ 88F		○					Special error level provided for maintenance purposes
	MAIN core	890 ~ 8AF							
	PC	8B0 ~ 8DF							
	TP	8E0 ~ 8FF							
Message level	MAIN application		○	△ (Battery and fieldbus errors will be registered in an error list.)				Enabled.	Status display, input error, etc.
	MAIN core	-							
	PC								
	PC (Update tool)								
	TP								
	MAIN application	200 ~ 24F							
	MAIN core	-							
	PC	250 ~ 29F							
	PC (Update tool)	2A0 ~ 2CF							
	TP	2D0 ~ 2FF							
	MAIN application	900 ~ 93F							
	MAIN core	940 ~ 97F							
	PC	980 ~ 9AF							
	PC (Update tool)	9B0 ~ 9BF							
	TP	9C0 ~ 9FF							
	MAIN application	A00 ~ A6F							
	MAIN core	A70 ~ A9F							
	PC	AA0 ~ ACF							
	TP	AD0 ~ AFF							
Operation-cancellation level	MAIN application		○	○		The program in which the error generated will be cancelled. (Except for axis errors, a cancellation factor is present only for the moment the error occurs.) * However, in the case of an error requiring servo OFF or all-axis servo OFF, all programs other than the “I/O processing program at operation/program abort” will be cancelled.	All programs other than the “I/O processing program at operation/program abort” will be cancelled. (Except for axis errors, a cancellation factor is present only for the moment the error occurs.)	Enabled.	Errors affecting operation. The system will attempt to reset minor errors below this level using an auto-reset function via external active command (SIO/PIO) (application only).
	MAIN core	-							
	PC								
	PC (Update tool)								
	TP								
	MAIN application	400 ~4CF							
	MAIN core	-							
	PC	4D0 ~ 4DF							
	PC (Update tool)	4E0 ~ 4EF							
	TP	4F0 ~ 4FF							

Error level	System error assignment source	Error No. (HEX)	Display (7-segment display, etc.)	Error list (Application only)	Error LED output (MAIN only)	Program run (Application only)		Error reset (Application only)	Remarks
						Other parameter No. 4 = 0	Other parameter No. 4 = 1		
Operation-cancellation level	MAIN application	B00 ~ B9F	○	○		The program in which the error generated will be cancelled. (Except for axis errors, a cancellation factor is present only for the moment the error occurs.) * However, in the case of an error requiring servo OFF or all-axis servo OFF, all programs other than the “I/O processing program at operation/program abort” will be cancelled.	All programs other than the “I/O processing program at operation/program abort” will be cancelled. (Except for axis errors, a cancellation factor is present only for the moment the error occurs.)	Enabled.	Errors affecting operation. The system will attempt to reset minor errors below this level using an auto-reset function via external active command (SIO/PIO) (application only).
	MAIN core	BA0 ~ BBF							
	PC	BC0 ~ BDF							
	TP	BE0 ~ BFF							
	MAIN application	C00 ~ CCF							
	MAIN core	CD0 ~ CDF							
	PC	CE0 ~ CEF							
	TP	CF0 ~ CFF							
Cold-start level	MAIN application		○	○	○ (Core only)	The program in which the error generated will be cancelled. * However, in the case of an error requiring drive-source cutoff, servo OFF or all-axis servo OFF (initialization error, power error, etc.), all programs other than the “I/O processing program at operation/program abort” will be cancelled.	All programs other than the “I/O processing program at operation/program abort” will be cancelled.	Not enabled.	The controller power must be reconnected (MAIN only). (The CPU and OS will run properly.)
	MAIN core	-							
	PC								
	PC (Update tool)								
	TP								
	MAIN application	600 ~ 6CF							
	MAIN core	-							
	PC	6D0 ~ 6DF							
	PC (Update tool)	6E0 ~ 6EF							
	TP	6F0 ~ 6FF							
	MAIN application	D00 ~ D8F							
	MAIN core	D90 ~ DAF							
	PC	DB0 ~ DCF							
	PC (Update tool)	DD0 ~ DDF							
	TP	DE0 ~ DFF							
	MAIN application	E00 ~ E8F							
	MAIN core	E90 ~ EBF							
	PC	EC0 ~ EDF							
	TP	EE0 ~ EFF							
System-down level	MAIN application		○	○	○	All programs will be cancelled.		Not enabled.	The controller power must be reconnected (MAIN only). (The CPU and OS will not run.)
	MAIN core	-							
	PC								
	PC (Update tool)								
	TP								
	MAIN application	FF0 ~ FBF							
	MAIN core	FC0 ~ FCF							
	PC	FD0 ~ FDF							
	TP	FE0 ~ FEF							

Note) Secret-level errors are not actual errors. Internal statuses are registered in an error list as secret-level errors, when deemed necessary, in order to facilitate error analysis.
PC: PC software TP: Teaching pendant

⊙ Error List (MAIN application) (In the panel window, the three digits after “E” indicate an error number.)

Error No.	Error name	Description, action, etc.
200	Encoder parameter data version mismatch warning	The version of encoder parameter data is not supported by this controller. Update the encoder parameters.
201	EMG logic error	A broken pin in the controller is suspected
202	ENB logic error	A broken pin in the controller is suspected
203	Drive-source cutoff relay DET (MELT) error	The drive-source cutoff relay may have fused.
206	Updating system mode error (IAI protocol)	An update command was received other than in the update mode.
207	Update file name error (IAI protocol)	The name of the update program file selected in the update mode is invalid. Select the correct file and repeat the updating procedure from the beginning.
208	Time data error	The time data is invalid. Check the data.
209	Unsupported control constant table ID error	The control constant table ID is not supported. Check the data.
20A	Control constant table change/query error	The message of the control constant table change/query command contains error. Check the message that has been sent.
20B	Control constant table write data type specification error	The specified control constant table write data type is invalid. Check the message that has been sent.
20C	Control constant table management information mismatch error	The management information regarding the control constant table is invalid. Confirm that the control constant table is supported by the controller.
20D	Flash busy reset timeout error	Error erasing/writing the flash ROM
20E	Motorola S-byte count error	The update program file is invalid. Check the file.
20F	Updating target specification error (Received by the application)	The system application received an updating target specification command. To update the program, restart the controller and repeat the updating procedure from the beginning.

(In the panel window, the three digits after “E” indicate an error number.)

Error No.	Error name	Description, action, etc.
400	Mounted-SIO unopen error (S)	An attempt was made to use a channel that is not open.
401	Mounted-SIO in-use error	An attempt was made to open a channel that has already been opened by other task.
402	Mounted-SIO unopen error (M)	An attempt was made to use a channel not opened by the applicable task.
403	Mounted-SIO duplicate WRIT execution error	WRIT commands were executed simultaneously by multiple tasks for the same channel.
404	Mounted-SIO unused channel selection error	An attempt was made to use a channel specified as “not used” by a parameter. Check I/O parameter Nos. 201, 213, etc.
406	Flash busy reset timeout	Error erasing/writing the flash ROM
407	Control constant table management information mismatch error	The management information regarding the control constant table is invalid. If this error occurs when the controller is started, the control constant table may need to be updated.
408	Control constant table ID error	The control constant table ID is invalid.
409	Encoder control constant error (power-source voltage control)	An encoder control constant relating to power-source voltage control is invalid. The encoder power-source voltage cannot be adjusted (the encoder power will be supplied without voltage adjustment).
40A	Encoder power-source voltage calculation error	The encoder power-source voltage cannot be adjusted (the encoder power will be supplied without voltage adjustment). Check the “motor/encoder configuration information” in driver parameter No. 26 and encoder parameter No. 11.
40B	Speed control parameter calculation error	Check driver parameter Nos. 38, 39, 40, 43, 44, 45, etc.
420	Steady-state (non-push motion) torque limit over error	The steady-state (non-push motion) torque limit is exceeded. Application of an unexpected load or locked operation is suspected, among others.
422	Multiple-slider command position near-miss error	The sum of distances traveled by both sliders in near-miss directions, as calculated from their estimate stopped positions after decelerating at the multiple-slider emergency deceleration margin (axis-specific parameter No. 106) from the speed corresponding to the command value, exceeds the sum of values specified in axis-specific parameter Nos. 105 and 107.
423	Multiple-slider actual position near-miss error	Both sliders are stopped in positions too close to each other.

(In the panel window, the three digits after “E” indicate an error number.)

Error No.	Error name	Description, action, etc.
601	EMG logic error	A broken pin in the controller is suspected
602	ENB logic error	A broken pin in the controller is suspected
603	Drive-source cutoff relay DET (MELT) error	The drive-source cutoff relay may have fused.
604	Power-supply board CPU ready OFF error	A ready status of the power-supply board cannot be confirmed.
605	Forced discharge error	Abnormal forced discharge. The drive-source cutoff relay may be abnormal. The power must be reconnected.
606	Regenerative discharge error	Abnormal regenerative discharge. The power must be reconnected.
607	Motor power-source voltage low error	Low voltage was detected in the motor power circuit.
608	Power-supply board FRCDCSTR-ON timeout error	Power-supply board FRCDCSTR-ON could not be confirmed within the specified time.
609	Power-supply board RBONSTR-ON timeout error	Power-supply board RBONSTR-ON could not be confirmed within the specified time.
60A	Power-supply board RBONSTR-OFF timeout error	Power-supply board RBONSTR-OFF could not be confirmed within the specified time.
60B	Power-supply board FRCDCSTR-OFF timeout error	Power-supply board FRCDCSTR-OFF could not be confirmed within the specified time.
60C	Power-system overheat error	An overheated power-supply board, regenerative resistor, etc., was detected. The power must be reconnected.
60D	Slave board CPU ready OFF error (other than power supply)	A ready status of the driver board, etc. (other than power-supply board) cannot be confirmed.
60E	Dynamic brake ON/OFF timeout error	Dynamic brake ON/OFF cannot be confirmed within the specified time.
60F	Power-supply board synchronous send timing error 1 (CPSDBSYER)	A communication failure occurred between the power-supply board and FPGA (main).
610	Power-supply board synchronous send timing error 2 (CPCLKER)	A communication failure occurred between the power-supply board and FPGA (main).
611	Power-supply board synchronous communication LRC error	A communication failure occurred between the power-supply board and FPGA (main).
612	Power-supply board synchronous communication timeout error	A communication failure occurred between the power-supply board and FPGA (main).
613	Driver synchronous communication driver read error	A communication failure occurred between the driver board and FPGA (main).
614	Driver synchronous communication LRC error	A communication failure occurred between the driver board and FPGA (main).
615	Driver synchronous communication toggle error	A communication failure occurred between the driver board and FPGA (main).
61A	Mounted-SIO watchdog timer error	The mounted-SIO CPU system is abnormal.
61B	Mounted-SIO parameter data error	There is an invalid mounted-SIO parameter. Check I/O parameter Nos. 201 to 224.
61C	Mounted-SIO parameter transfer format error	The mounted-SIO parameter transfer format is invalid.
61D	Mounted-SIO other slave error	An error occurred in the mounted-SIO CPU. Record or save the detailed information of the error list.
61E	Mounted-SIO F-send/receive queue overflow error (M)	An overflow was detected in the FIFO (FPGA) for main CPU-mounted-SIO communication.
61F	Mounted-SIO control command PUT disable error	FIFO (FPGA)-FULL was detected at mounted-SIO control command PUT.
620	Mounted-SIO control command completion timeout error	Completion of the mounted-SIO control command cannot be confirmed after the specified time.
621	Mounted-SIO logic error	A logic error in mounted-SIO control.

(In the panel window, the three digits after “E” indicate an error number.)

Error No.	Error name	Description, action, etc.
622	Mounted-SIO undefined control command receive error	An undefined control command was received from the mounted-SIO.
623	Driver error detail code acquisition error	A driver error occurred, but an error detail code could not be acquired.
624	Undefined driver error	A driver error occurred.
625	Driver-side detection synchronous communication error	A communication failure occurred between the driver board and FPGA (main).
626	Driver IPM15V voltage low error	A low voltage was detected in the driver IPM15V circuit.
627	Driver current detection A/D offset over error	A driver current detection A/D offset error was detected.
628	Driver error	(Driver error for future expansion)
629	Driver error	(Driver error for future expansion)
62A	Driver error	(Driver error for future expansion)
62B	Driver error	(Driver error for future expansion)
62C	Driver error	(Driver error for future expansion)
62D	Driver error	(Driver error for future expansion)
62E	Driver error	(Driver error for future expansion)
62F	Driver error	(Driver error for future expansion)
630	Updating system code error (Application detection)	The updating system code is invalid.
631	Updating unit code error (Application detection)	The updating unit code is invalid.
632	Updating device number error (Application detection)	The updating device number is invalid.
633	Feedback pulse synchronization error (Detected in the speed loop)	Abnormal feedback pulse synchronization (detected in the speed loop).
634	Feedback pulse synchronization error (Detected in the position loop)	Abnormal feedback pulse synchronization (detected in the position loop).
635	Deadman/enable switch requiring reset recovery open	Reset the deadman/enable switch, and then reconnect the power.
636	Serial encoder command busy error	The system was busy when the serial encoder command was issued.
637	Serial encoder command timeout error	Completion of the serial encoder command cannot be confirmed after the specified time.
638	Speed control parameter setting command busy error	The system was busy when the speed control parameter setting command was issued.
639	Speed control parameter setting command timeout error	Completion of the speed control parameter setting command cannot be confirmed after the specified time.
63A	ABZ encoder logic error	An encoder phase-A/B electrical level pattern error was detected. The power must be reconnected.
63B	Encoder/motor control constant table flash ROM status error	Data is not written correctly to the flash ROM, or the data is of an old, incompatible version.
63C	Encoder/motor control constant table checksum error	The flash ROM data is corrupted.
63D	ABZ encoder specification error	An ABZ encoder cannot be installed for this axis. Check the “motor/encoder configuration information” in driver parameter No. 26 and encoder parameter No. 11.

(In the panel window, the three digits after “E” indicate an error number.)

Error No.	Error name	Description, action, etc.
63E	ABZ encoder magnetic-pole sensor signal logic error	Check if the encoder cable is connected.
63F	Encoder control constant error	The encoder control constant is invalid.
640	Motor control constant error	The motor control constant is invalid.
641	Encoder power-source voltage control parameter error	Check driver parameter Nos. 32, 33, etc.
642	Speed loop parameter error	Check driver parameter Nos. 43, 44, 45, etc.
643	Encoder resolution division error	Check “Axis-specific parameter No. 43: Encoder division ratio.”
644	Encoder/motor combination mismatch error (encoder resolution)	Check driver parameter No. 26, encoder parameter No. 11.
645	DAC transfer completion check timeout error when encoder power was supplied	A timeout occurred during DAC transfer when the encoder power was supplied.
646	Encoder EEPROM read busy error	The encoder is faulty or an encoder communication failure occurred.
647	Encoder EEPROM write address mismatch error	The encoder is faulty or an encoder communication failure occurred.
648	Encoder EEPROM read address mismatch error	The encoder is faulty or an encoder communication failure occurred.
649	Undefined serial encoder installation error	Installation of serial encoder is not defined. Check the “motor/encoder configuration information” in driver parameter No. 26 and encoder parameter No. 11.
64A	Undefined serial encoder command error	The serial encoder command is not defined.
64B	Serial encoder command packet error	The serial encoder command packet is invalid.
64C	1-revolution data reset error at servo ON (serial encoder command)	A 1-revolution data reset was commanded when the servo was ON. Turn OFF the servo.
64D	Encoder reset command timeout error (serial encoder command)	An encoder communication failure.
64E	ABS data query command timeout error (serial encoder command)	An encoder communication failure.
64F	Encoder error reset error at servo ON (serial encoder command)	Turn OFF the servo before resetting an encoder error.
650	Encoder receive timeout error (during initialization communication)	An encoder communication failure.
651	Speed control interruption control job error	The speed control interruption error job is invalid.
652	Serial encoder command control job error	The serial encoder command control job is invalid.
653	Encoder control job logic error	The encoder control job logic is invalid.
654		
655	Encoder receive timeout error at serial encoder command issuance	An encoder communication failure.
656	Torque limit logic error	The torque limit logic is invalid.
657	Torque limit parameter error	Check driver parameter Nos. 38, 39, 40, etc.
658	Movement error during ABZ encoder counter initialization	Axis movement was detected while initializing the ABZ encoder counter following power on. The power may have been turned on or a software reset executed while the actuator was moving due to external force such as reactive force of a self-supported cable or while the installation location was vibrating.

(In the panel window, the three digits after “E” indicate an error number.)

Error No.	Error name	Description, action, etc.
65A	Unsupported encoder ID error	The encoder is not supported. No encoder control constant record is available that corresponds to the encoder ID. Check the installed encoder.
65B	Unsupported encoder error (main information)	The encoder is not supported. No encoder control constant record is available that corresponds to the encoder ID, or the record is invalid. Check the “motor/encoder configuration information” in driver parameter No. 26 and encoder parameter No. 11.
65C	Unsupported motor error (main information)	The motor is not supported. No motor control constant record is available that corresponds to the motor ID, or the record is invalid. Check the “motor/encoder configuration information” in driver parameter No. 26 and encoder parameter No. 11.
65D	Unsupported motor error (driver information)	The motor is not supported. The motor ID bit number is outside the range of “maximum supported motor ID number” when the driver parameter, “Use motor control data in driver flash ROM” is specified. Check the “motor/encoder configuration information” in driver parameter No. 26 and encoder parameter No. 11.
65E	Current detection circuit type mismatch error	The motor control constant, “Current detection circuit specification” does not match the driver parameter, “Installation type word 1, current detection circuit type.” Check the “motor/encoder configuration information” in driver parameter No. 26 and encoder parameter No. 11.
65F	Main/driver motor control data mismatch error	A motor control constant does not match the corresponding driver parameter (rated speed, maximum speed, rated current, maximum current number of pole pairs, linear motor lead, linear motor specification). Check the “motor/encoder configuration information” in driver parameter No. 26 and encoder parameter No. 11.
660	Maximum motor speed mismatch error	The axis-specific parameter, “Maximum motor speed” does not match the motor control constant, “Maximum speed.” Check the “motor/encoder configuration information” in driver parameter No. 26 and encoder parameter No. 11.
661	Encoder/motor combination mismatch error (linear/rotary type)	The linear/rotary type does not match between the encoder and motor. Check the “motor/encoder configuration information” in driver parameter No. 26 and encoder parameter No. 11.
662	Mechanical angle 360-degree pulse count calculation error	The calculated pulse count based on 360 mechanical angle degrees is invalid. (The calculated value is “0,” or in the case of a linear encoder, the calculated value has fraction.)
663	Software DB specification error	The value in the driver parameter, “Software DB specification” is invalid.
664	Current control band number specification error	The value in the driver parameter, “Current control band number” is invalid.
665	Driver/encoder communication line channel number specification error	All-axis parameter No. 101 or 102, “Driver/encoder communication line channel setting” is invalid (invalid value, duplicate specifications).
666	Driver initialization communication type specification error	All-axis parameter No. 103 or 104, “Driver initialization communication type setting” is invalid (invalid value, duplicate specifications, mismatch).

(In the panel window, the three digits after “E” indicate an error number.)

Error No.	Error name	Description, action, etc.
667	Invalid driver initialization communication line specification error at specification of valid axis	Initialization communication line channel number is not specified for a valid axis. Check all-axis parameter No. 1, “Valid axis pattern,” Nos. 101 and 102, “Driver/encoder communication line channel setting” and Nos. 103 and 104, “Driver initialization communication type setting.”
668	Driver target information initialization error	The initialization sequence of driver target information did not complete successfully. Check the installed driver board. Check all-axis parameter Nos. 101, 102, 103 and 104, or driver parameter No. 26, encoder parameter No. 11.
669	Encoder target information initialization error	The initialization sequence of encoder target information did not complete successfully. Check the installed encoder. Check all-axis parameter Nos. 101, 102, 103 and 104, or driver parameter No. 26, encoder parameter No. 11.
66A	Power-system target information initialization error	The initialization sequence of power-system target information did not complete successfully. Check the installed power-supply board. Check the power-supply board parameters.
66B	Slave communication error response error	An error response was received during slave communication.
66C	SCI LRC error (slave communication)	The message LRC of slave communication is invalid.
66D	Slave communication target ID error	The target ID of slave communication is invalid.
66E	Slave communication block number error	The block number of slave communication is invalid.
66F	Target specification error due to no axis number	The specified target of slave communication (driver or encoder) is invalid (no axis number is assigned for the target ID, or an internal driver board axis is specified).
670	Target board type error	The target board type is invalid.
671	Encoder control data error	The encoder control data is invalid or cannot be acquired. Take the same actions specified for error Nos. 65A, 65B and 669.
672	Motor control data error	The motor control data is invalid or cannot be acquired. Take the same actions as specified for error Nos. 65C, 65D, 668 and 669.
676	ABZ encoder magnetic-pole sensor signal read error	Check if the encoder cable is connected.
677	ABZ encoder phase-Z clear position error	Check if the encoder cable is connected.

(In the panel window, the three digits after “E” indicate an error number.)

Error No.	Error name	Description, action, etc.
801	SCIF overrun status (IAI protocol reception)	Communication failure. Check for noise, connected equipment and communication setting.
802	SCIF receive ER status (IAI protocol reception)	Communication failure. Check for noise, shorted/disconnected communication cable, connected equipment and communication setting. This error will also occur when establishing communication with the PC/TP wrongly connected to SIO-CH1 being opened to the user.
803	Receive timeout status (IAI protocol reception)	The transfer interval after the first received byte is too long. Possible causes include disconnected communication cable and error in the connected equipment.
804	SCIF overrun status (SEL reception)	Communication failure. Check for noise, connected equipment and communication setting.
805	SCIF receive ER status (SEL reception)	Communication failure. Check for noise, shorted/disconnected communication cable, connected equipment and communication setting.
806	SCIF receive ER status due to other factor (SEL reception)	Communication failure. Take the same action specified for error No. 804 or 805.
807	Drive-source cutoff relay ER status	The motor-drive power ON status remains ON even when the drive source is cut off. The drive-source cut-off relay contacts may have been melted.
808	Power OFF status during slave parameter write	The power was turned off while writing slave parameters. (This error can be detected only when a backup battery is used.)
809	Power OFF status during data write to flash ROM	The power was turned off while writing data to the flash ROM. (This error can be detected only when a backup battery is used.)
80A	Expanded-SIO overrun status (SEL reception)	Communication failure. Check for noise, connected equipment and communication setting.
80B	Expanded-SIO parity ER status (SEL reception)	Communication failure. Check for noise, shorted/disconnected communication cable, connected equipment and communication setting.
80C	Expanded-SIO framing ER status (SEL reception)	Communication failure. Check for noise, shorted/disconnected communication cable, connected equipment and communication setting.
80D	Expanded-SIO receive ER status due to other factor (SEL reception)	Communication failure. Take the same action specified for error No. 80A, 80B or 80C.
80E	Expanded-SIO receive buffer overflow status (SEL reception)	The receive buffer overflowed. Excessive data was received from outside.
80F	Ethernet control status 1	Ethernet control information (for analysis)
810	Ethernet control status 2	Ethernet control information (for analysis)
811	Maintenance information 1	Maintenance information (for analysis)
812	Maintenance information 2	Maintenance information (for analysis)
813	Maintenance information 3	Maintenance information (for analysis)
814	Maintenance information 4	Maintenance information (for analysis)
815	Maintenance information 5	Maintenance information (for analysis)

(In the panel window, the three digits after “E” indicate an error number.)

Error No.	Error name	Description, action, etc.
81A	Mounted-SIO overrun status (SEL reception)	Communication failure. Check for noise, connected equipment and communication setting.
81B	Mounted-SIO parity ER status (SEL reception)	Communication failure. Check for noise, shorted/disconnected communication cable, connected equipment and communication setting.
81C	Mounted-SIO framing ER status (SEL reception)	Communication failure. Check for noise, shorted/disconnected communication cable, connected equipment and communication setting.
81D	Mounted-SIO S-receive queue overflow status (SEL reception)	The receive queue in the mounted-SIO CPU overflowed. Excessive data was received from outside.
81E	Mounted-SIO M-receive temporary queue overflow status (SEL reception)	The temporary receive queue in the main CPU overflowed. Excessive data was received from outside.
81F	Mounted-SIO M-receive buffer overflow status (SEL reception)	The receive buffer overflowed. Excessive data was received from outside.
820	DRV status 820 (TO_SELECTEDDATA)	(This is not an error, but maintenance information.)

(In the panel window, the three digits after “E” indicate an error number.)

Error No.	Error name	Description, action, etc.
900	Blank step shortage error	There are not enough blank steps to save step data. Provide enough blank steps needed to save step data.
901	Step number error	The step number is invalid.
902	Symbol-definition table number error	The symbol-definition table number is invalid.
903	Point number error	The point number is invalid.
904	Variable number error	The variable number is invalid.
905	Flag number error	The flag number is invalid.
906	I/O port/flag number error	The I/O port/flag number is invalid.
910	Command error (IAI protocol HT reception)	The command ID is not supported or invalid. (For future expansion)
911	Message conversion error (IAI protocol HT reception)	The transmitted message does not match the message format or contains invalid data. (For future expansion)
912	PC/TP servo-movement command acceptance-enable input OFF error	Any axis movement command issued to the axis specified in I/O parameter No. 78 from the PC/TP will not be accepted while the input port specified in I/O parameter No. 77 is OFF. (Important: The acceptance-enable input port will become invalid once the operation is started.)
913	Multiple-program simultaneous start prohibition error	Starting of multiple programs is prohibited.
914	Abnormal absolute-data backup battery voltage	Check/replace the absolute-data backup battery and check the encoder cable connection, and then perform an absolute reset.
A01	System-memory backup battery voltage-low warning	The voltage of the system-memory backup battery is low. Replace the battery. (Above the minimum data-backup voltage)
A02	Abnormal system-memory backup battery voltage	The voltage of the system-memory backup battery is low. Replace the battery. (Below the minimum data-backup voltage)
A03	Absolute-data backup battery voltage-low warning (Driver analysis)	The voltage of the absolute-data backup battery is low. Check the battery connection or replace the battery.
A04	System mode error at core update	An update command was received when the system was not in the core update mode. Before updating the core, confirm that a chip resistance for setting core update mode is provided on the board. (For maintenance)
A05	Motorola S record format error	The update program file is invalid. Check the file.
A06	Motorola S checksum error	The update program file is invalid. Check the file.
A07	Motorola S load address error	The update program file is invalid. Check the file.
A08	Motorola S write address over error	The update program file is invalid. Check the file.
A09	Flash-ROM timing limit over error (Write)	Error writing the flash ROM
A0A	Flash-ROM timing limit over error (Erase)	Error erasing the flash ROM

(In the panel window, the three digits after “E” indicate an error number.)

Error No.	Error name	Description, action, etc.
A0B	Flash-ROM verify error	Error erasing/writing the flash ROM
A0C	Flash-ROM ACK timeout	Error erasing/writing the flash ROM
A0D	Head sector number specification error	Error erasing the flash ROM
A0E	Sector count specification error	Error erasing the flash ROM
A0F	Write-destination offset address error (Odd-numbered address)	Error writing the flash ROM
A10	Write-source data buffer address error (Odd-numbered address)	Error writing the flash ROM
A11	Invalid core-code sector block ID error	The core program already written to the flash ROM is invalid.
A12	Core-code sector block ID erase count over	The number of times the flash ROM can be erased was exceeded.
A13	Flash-ROM write request error when erase is incomplete	When updating, a flash-ROM write command was received before a flash-ROM erase command. Check the update program file and perform update again.
A14	Busy-status reset timeout error at EEPROM write	A busy-status reset timeout occurred after executing EEPROM write.
A15	EEPROM write request error due to no-EEPROM in target	An EEPROM write request was received for a driver or other unit with CPU not equipped with EEPROM.
A16	EEPROM read request error due to no-EEPROM in target	An EEPROM read request was received for a driver or other unit with CPU not equipped with EEPROM.
A17	Message checksum error (IAI protocol reception)	The checksum in the received message is invalid.
A18	Message header error (IAI protocol reception)	The header in the received message is invalid. Invalid header position (message is 9 bytes or less) is suspected, among other reasons.
A19	Message station number error (IAI protocol reception)	The station number in the received message is invalid.
A1A	Message ID error (IAI protocol reception)	The ID in the received message is invalid.
A1C	Message conversion error	The transmitted message does not match the message format or contains invalid data. Check the transmitted message.
A1D	Start mode error	A start not permitted in the current mode (MANU/AUTO) was attempted.
A1E	Start condition non-satisfaction error	Start was attempted when the start condition was not satisfied, such as when an all-operation-cancellation factor (see the 7-segment display: Drive-source cutoff, mode switching, error, auto-start switch OFF edge, deadman switch, safety gate, emergency stop, etc.) was present or the flash ROM was being written.
A1F	Axis duplication error (SIO・PIO)	The applicable axis is currently in use.
A20	Servo-control-right acquisition error (SIO・PIO)	The servo control right is not available.
A21	Servo-control-right duplicate-acquisition error (SIO・PIO)	The servo control right has already been acquired.
A22	Servo-control-right non-acquisition error (SIO・PIO)	An attempt to retain the servo control right has failed.

(In the panel window, the three digits after “E” indicate an error number.)

Error No.	Error name	Description, action, etc.
A23	Absolute-data backup battery voltage-low warning (Main analysis)	The voltage of the absolute-data backup battery is low. Check the battery connection or replace the battery.
A25	Step count specification error	The specified number of steps is invalid.
A26	Program count specification error	The specified number of programs is invalid.
A27	Program non-registration error	The applicable program is not registered.
A28	Reorganization disable error during program run	A program-area reorganization operation was attempted while a program was running. End all active programs first.
A29	Active-program edit disable error	An edit operation was attempted to a program currently not running. End the applicable program first.
A2A	Program inactive error	The specified program is not running.
A2B	Program-run command refusal error in AUTO mode	Programs cannot be run from the TP/PC software connector in the AUTO mode.
A2C	Program number error	The program number is invalid.
A2D	Inactive program resumption error	A resumption request was received for a program currently not running.
A2E	Inactive program pause error	A pause request was received for a program currently not running.
A2F	Breakpoint error	The step number specified as a breakpoint is invalid.
A30	Breakpoint setting-count specification error	The number of breakpoints to be set exceeds the limit value.
A31	Parameter change value error	The value of parameter changed is invalid.
A32	Parameter type error	The parameter type is invalid.
A33	Parameter number error	The parameter number is invalid.
A34	Card-parameter buffer read error	Error reading the card-parameter buffer
A35	Card-parameter buffer write error	Error writing the card-parameter buffer
A36	Parameter change refusal error during operation	Parameters cannot be changed during operation (program is running, servo is in use, etc.).
A37	Card manufacturing/function information change refusal error	The card manufacturing/function information cannot be changed.
A38	Parameter change refusal error during servo ON	An attempt was made to change a parameter whose change is not permitted while the servo is ON.
A39	Non-acquired card parameter change error	An attempt was made to change a parameter for a card not recognized at reset.
A3A	Device number error	The device number is invalid.
A3C	Memory initialization type specification error	The specified memory initialization type is invalid.
A3D	Unit type error	The unit type is invalid.
A3E	SEL write data type specification error	The specified SEL write data type is invalid.
A3F	Flash-ROM write refusal error during program run	The flash ROM cannot be written while a program is running.

(In the panel window, the three digits after “E” indicate an error number.)

Error No.	Error name	Description, action, etc.
A40	Data change refusal error during flash ROM write	Data cannot be changed while the flash ROM is being written.
A41	Duplicate flash-ROM write commands refusal error	Another flash-ROM write command was received while the flash ROM was being written.
A42	Direct monitor prohibition error during flash ROM write	Direct monitor is prohibited while the flash ROM is being written.
A43	P0/P3-area direct monitor prohibition error	Direct monitor in the P0/P3 areas is prohibited.
A44	Point-data count specification error	The specified number of point data is invalid.
A45	Symbol-record count specification error	The specified number of symbol records is invalid.
A46	Variable-data count specification error	The specified number of variable data is invalid.
A48	Error-detail query type 1 error	Error-detail query type 1 is invalid.
A49	Error-detail query type 2 error	Error-detail query type 2 is invalid.
A4A	Monitoring data type error	The data type for monitoring data query is invalid.
A4B	Monitoring-record count specification error	The specified number of records for monitoring data query is invalid.
A4C	Monitoring-operation special command register busy error	The driver special command ACK generated a timeout during monitoring operation.
A4E	Parameter register busy error at issuance of slave command	The driver special command ACK generated a timeout at issuance of a slave command.
A4F	Software reset refusal error during operation	Software reset (SIO) is prohibited during operation (program is running, servo is in use, etc.).
A50	Drive-source recovery request refusal error	The drive-source cutoff factor (error, deadman switch, safety gate, emergency stop, etc.) has not been removed.
A51	Operation-pause reset request refusal error	The all-operation-pause factor (drive-source cutoff, operation-pause signal, deadman switch, safety gate, emergency stop, etc.) has not been removed.
A53	Refusal error due to servo ON	A processing not permitted during servo ON was attempted.
A54	Refusal error due to unsupported function	The function is not supported.
A55	Refusal error due to exclusive manufacturer function	A processing not opened to users other than the manufacturer was attempted.
A56	Refusal error due to invalid data	The data is invalid.
A57	Program start duplication error	An attempt was made to start a program currently running.
A58	BCD error warning	The BCD value being read may be invalid, or the value being written (variable 99) may be a negative value, among other reasons.
A59	IN/OUT command port flag error warning	The number of I/O ports (flags) may have exceeded 32, among other reasons. Check the I/O port (flag) specifications.
A5B	Character-string → value conversion error warning	The specified number of converting characters is invalid or characters that cannot be converted to value are included.
A5C	Copying-character count error warning with SCPY command	The specified number of copying characters is invalid.
A5D	SCIF open error in non-AUTO mode	The channel was opened in a non-AUTO mode. In the MANU mode, the PC/TP connection must be forcibly disconnected before opening the serial channel opened to the user. Exercise caution.

(In the panel window, the three digits after “E” indicate an error number.)

Error No.	Error name	Description, action, etc.
A5E	I/O-port/flag count specification error	The specified number of I/O ports/flags is invalid.
A5F	Fieldbus error (LERROR-ON)	A LERROR-ON was detected.
A60	Fieldbus error (LERROR-BLINK)	A LERROR-BLINK was detected.
A61	Fieldbus error (HERROR-ON)	A HERROR-ON was detected.
A62	Fieldbus error (HERROR-BLINK)	A HERROR-BLINK was detected.
A63	Fieldbus not ready	Fieldbus ready cannot be confirmed.
A64	SCIF overrun error (SIO bridge)	Communication failure. Check for noise, connected equipment and communication setting.
A65	SCIF receive error (SIO bridge)	Communication failure. Check for noise, shorted/disconnected communication cable, connected equipment and communication setting.
A66	SCI overrun error (SIO bridge)	Communication failure. Check for noise, circuit failure and slave card.
A67	SCI framing error (SIO bridge)	Communication failure. Check for noise, shorting, circuit failure and slave card.
A68	SCI parity error (SIO bridge)	Communication failure. Check for noise, shorting, circuit failure and slave card.
A69	Data change refusal error during operation	An attempt was made to change data whose change is prohibited during operation (program is running, servo is in use, etc.).
A6A	Software reset refusal error during write	Software reset is prohibited while data is being written to the flash ROM or slave parameters are being written.
A6B	Fieldbus error (FBRS link error)	A FBRS link error was detected.
A6C	PC/TP start command refusal error in AUTO mode	Starting from the PC software/TP connector is prohibited in the AUTO mode.
A6D	P0/P3/FROM-area direct write prohibition error	Direct write to the P0/P3/FROM areas is prohibited.
A6E	Refusal error during write	A processing not permitted while data is being written to the flash ROM or slave parameters are being written was attempted.
A6F	Driver monitor type mismatch error	The monitor type supported by the standard DIO board or based on the capacity of FROM on the main CPU board does not match the monitor type on the PC software side (selected on the monitor screen).
A8E	Unit type error (Core detection)	The unit type specified in the received command message is invalid or not supported.

(In the panel window, the three digits after “E” indicate an error number.)

Error No.	Error name	Description, action, etc.
B00	SCHA setting error	The setting of SCHA command is invalid.
B01	TPCD setting error	The setting of TPCD command is invalid.
B02	SLEN setting error	The setting of SLEN command is invalid.
B03	Home-return method error	The setting of “Axis-specific parameter No. 10, Home-return method” is invalid. (Not incremental encoder AND current position 0 home is specified, etc.)
B04	1-shot-pulse output excessive simultaneous use error	The number of BTPN and BTPF timers operating in one program simultaneously exceeds the upper limit (16).
B05	Estimate-stroke over error at home return	The operation at home return exceeded the estimate stroke. The home sensor or creep sensor may be faulty, among other reasons.
B06	Expanded-SIO in-use error	An attempt was made to open a channel already opened by other task.
B07	Expanded-SIO unopen error	An attempt was made to use a channel not opened by own task.
B08	Expanded-SIO duplicate WRIT execution error	WRIT commands were executed simultaneously by multiple tasks for the same channel.
B09	Expanded-SIO RS485 WRIT/READ simultaneous execution error	WRIT and READ commands were executed simultaneously in the RS485 mode.
B0A	Expanded-SIO unassigned-channel use error	An attempt was made to use a channel not assigned properly. Check I/O parameter Nos. 100 to 111 and the statuses of I/O slots.
B10	Phase-Z search timeout error	Phase Z cannot be detected. Check for operation restriction, wiring, encoder, motor, etc.
B11	Home-sensor pull-out timeout error	Pull-out from the home sensor cannot be confirmed. Check for operation restriction, wiring, motor, home sensor, etc.
B12	Storage variable number error for SEL command return code	The variable number specified for storing SEL command’s return code is invalid.
B13	Backup SRAM data checksum error	The backup SRAM data has been destroyed. Check the battery.
B14	Flash-ROM, 8-Mbit version unsupported function error	An attempt was made to use a function not supported in the flash-ROM, 8-Mbit board environment. (HT connection specification, etc.)
B15	Input-port debug filter type error	The setting of input-port debug filter type is invalid.
B16	SEL operand specification error	The operand specification of SEL command is invalid.
B17	Parameter register busy error at issuance of slave command	The driver special command ACK generated a timeout at issuance of a slave command.
B18	Device number error	The device number is invalid.
B19	Unit type error	The unit type is invalid
B1A	Absolute reset specification error	The specification for absolute reset using an optional function, etc., is invalid. (Two or more axes are specified simultaneously, non-absolute-encoder axis is specified, etc.)
B1B	Ethernet non-closed socket open error	An attempt was made to open a socket without closing it first.
B1C	Ethernet in-use-by-other-task error	An attempt was made to open a channel already opened by other task.

(In the panel window, the three digits after “E” indicate an error number.)

Error No.	Error name	Description, action, etc.
B1D	Ethernet non-open error	An attempt was made to use a channel not opened by own task.
B1E	Ethernet multiple WRIT execution error	WRIT commands were executed simultaneously by multiple tasks for the same channel, or a WRIT command that had failed once (due to a communication error, etc.) was executed again without first executing a CLOS command followed by an OPEN command.
B1F	Ethernet job busy error	An attempt was made to start a new process when the Ethernet mailbox control job was busy.
B20	Ethernet non-initialization device use error	An attempt was made to use the Ethernet system when Ethernet device initialization was not yet complete. Check I/O parameter Nos. 123 to 159, 14, 15, etc., depending on the purpose of use.
B21	Ethernet IP address error	An error will generate under the following conditions during normal use. When IP address (H) (first octet) through IP address (L) (fourth octet) are given as IP_H, IP_MH, IP_ML and IP_L, the error conditions are described as follows: IP_H ≤ 0 or IP_H = 127 or IP_H > 255 or IP_MH < 0 or IP_MH > 255 or IP_ML < 0 or IP_ML > 255 or IP_L ≤ 0 or IP_L ≥ 255 Check I/O parameter Nos. 132 to 135, 149 to 152, and 154 to 157, the IP address of connection destination specified by an IPCN command in an integer variable, or the like.
B22	Ethernet port number error	An error will generate if own port number < 1025, or own port number > 65535, or own port number duplication, or connection-destination port number for client ≤ 0, or connection-destination port number for client > 65535, or connection-destination port number for server < 0, or connection-destination port number for server > 65535 is satisfied. Check I/O parameter Nos. 144 to 148, 159, 153, and 158, the port number of connection destination specified by an IPCN command in an integer variable, or the like.
B86	SEL PTRQ command preprocessing error	The PTRQ command setting is abnormal. Check the setting for abnormality, such as deviation from the allowable range.
C02	Executable program count over error	Execution requests were received for programs exceeding the number that can be executed simultaneously.
C03	Non-registered program specification error	A number not yet registered among program Nos. 1 to 64 was specified via an I/O or in a program.
C04	Program entry point non-detection error	A request was made to execute a program number for which no program steps are registered.
C05	Program first-step BGSR error	The program specified for execution starts with BGSR.
C06	Executable step non-detection error	The program specified for execution does not contain executable program steps.

(In the panel window, the three digits after “E” indicate an error number.)

Error No.	Error name	Description, action, etc.
C07	Subroutine non-definition error	The subroutine specified for call is not defined.
C08	Subroutine duplicate-definition error	The same subroutine number is defined at multiple locations.
C0A	Tag duplicate-definition error	The same tag number is defined at multiple locations.
C0B	Tag non-definition error	The tag specified as the jump destination of a GOTO statement is not defined.
C0C	DW/IF/IS/SL pair-end mismatch error	The branching command syntax is invalid. Correspondence with the last appearing branching command is invalid when EDIF, EDDO or EDSL is used. Check the correspondence between IF/IS command and EDIF, DO command and EDDO or SLCT command and EDSL.
C0D	DW/IF/IS/SL no pair-end error	EDIF, EDDO or EDSL is not found. Check the correspondence between IF/IS command and EDIF, DO command and EDDO or SLCT command and EDSL.
C0E	BGSR no pair-end error	There is no EDSR for BGSR, or no BGSR for EDSR. Check the correspondence between BGSR and EDSR.
C0F	DO/IF/IS over-nesting error	The number of nests in a DO or IF/IS command exceeds the limit value. Check for excessive nesting or branching out of or into the syntax using a GOTO command.
C10	SLCT over-nesting error	The number of nests in a SLCT command exceeds the limit value. Check for excessive nesting or branching out of or into the syntax using a GOTO command.
C11	Subroutine over-nesting error	The number of nests in a subroutine exceeds the limit value. Check for excessive nesting or branching out of or into the syntax using a GOTO command.
C12	DO/IF/IS under-nesting error	The EDIF or EDDO position is invalid. Check the correspondence between IF/IS command and EDIF or DO command and EDDO, or branching out of or into the syntax using a GOTO command.
C13	SLCT under-nesting error	The EDSL position is invalid. Check the correspondence between SLCT and EDSR, or branching out of or into the syntax using a GOTO command.
C14	Subroutine under-nesting error	The EDSR position is invalid. Check the correspondence between BGSR and EDSR, or branching out of or into the syntax using a GOTO command.
C15	SLCT next-step command code error	The program step next to SLCT must be WHEQ, WHNE, WHGT, WHGE, WHLT, WHLE, WSEQ, WSNE, OTHE or EDSL.
C16	Create stack failed	Initialization of the input-condition-status storage stack has failed.
C17	Expansion-condition code error	Input program step error. The expansion condition code is invalid.
C18	Expansion-condition LD simultaneous processing over error	The number of LDs processed simultaneously exceeds the limit value.
C19	Expansion-condition LD shortage error 1	There is not enough LD when expansion condition A or O is used.
C1A	Expansion-condition LD shortage error 2	There is not enough LD when expansion condition AB or OB is used.
C1C	Unused-LD detection error	An attempt was made to execute a command based on multiple LD condition that has been saved, without using it in expansion condition AB or OB.

(In the panel window, the three digits after “E” indicate an error number.)

Error No.	Error name	Description, action, etc.
C1F	Input-condition CND shortage error	The necessary input condition is not found when an expansion condition is used.
C21	Input-condition use error with input-condition prohibited command	Input-condition prohibited commands prohibit the use of input conditions.
C22	Invalid command position error with input-condition prohibited command	A command for which input condition is prohibited cannot be included in an input condition nest.
C23	Invalid operand error	Program step error. The necessary operand data is invalid.
C24	Operand type error	Program step error. The operand data type is invalid.
C25	Actuator control declaration error	The setting of actuator control declaration command is invalid.
C26	Timer setting-range over error	The timer setting is invalid.
C27	Timeout setting-range over error during wait	The timeout setting is invalid.
C28	Tick count setting-range error	The Tick count setting is invalid.
C29	DIV command divisor 0 error	“0” was specified as the divisor in the DIV command.
C2A	SQR command range error	The operand value in the SQR command is invalid. Input a value larger than “0” as data in a SQR command.
C2B	BCD display digit range error	The specified number of BCD display digits is invalid. Specify a value between 1 and 8.
C2C	Program number error	A number not yet registered among program Nos. 1 to 64 was specified.
C2D	Step number error	The step number is invalid.
C2E	Blank step shortage error	There are not enough blank steps to save step data. Provide enough blank steps needed to save step data.
C2F	Axis number error	The axis number is invalid.
C30	Axis pattern error	The axis pattern is invalid.
C32	Operating-axis addition error during command execution	An operating axis for point data was added during continuous point movement or push-motion movement calculation.
C33	Base axis number error	The base axis number is invalid.
C34	Zone number error	The zone number is invalid.
C35	Point number error	The point number is invalid.
C36	I/O port/flag number error	The I/O port/flag number is invalid.
C37	Flag number error	The flag number is invalid.
C38	Tag number error	The tag number is invalid.
C39	Subroutine number error	The subroutine number is invalid.
C3A	User-open communication channel number error	The channel number of the communication channel opened to the user is invalid.
C3B	Parameter number error	The parameter number is invalid.
C3C	Variable number error	The variable number is invalid.
C3D	String number error	The string number is invalid.
C3E	String-variable data count specification error	The specified number of string variables exceeds the area, etc.

(In the panel window, the three digits after “E” indicate an error number.)

Error No.	Error name	Description, action, etc.
C40	String-variable delimiter non-detection error	Delimiter cannot be detected in the string variable.
C41	String-variable copy size over error	The copy size of string variable is too large.
C42	Character count non-detection error during string processing	The character-string length is not defined in string processing. Execute a string processing command after defining the length with a SLEN command.
C43	Character-string length error during string processing	The character-string length used in string processing is invalid. Check the value of character-string length defined by a SLEN command.
C45	Symbol definition table number error	The symbol definition table number is invalid.
C46	Blank area shortage error with source-symbol storage table	There is not enough area to store the source symbols. Check the number of times source symbol can be used.
C47	Symbol search error	Definitions are not found for the symbols used in the program steps.
C48	SIO-message continuous conversion error	The transmitted SIO message does not match the message format or contains invalid data. Check the transmitted message.
C49	SEL-SIO in-use error	The SIO is being used by other interpreter task.
C4A	SCIF unopen error	Serial channel 1 opened to the user is not opened in the target task. Open the channel using an OPEN command first.
C4B	Delimiter non-definition error	An end character is not defined. Set an end character using a SCHA command first.
C4E	SIO1 invalid usage OPEN error	The usage of serial channel opened to the user does not match the parameter. Check “I/O parameter No. 90, Usage of SIO channel opened to user.”
C4F	SEL program/source symbol checksum error	The flash ROM data has been destroyed.
C50	Symbol definition table checksum error	The flash ROM data has been destroyed.
C51	Point data checksum error	The flash ROM data has been destroyed.
C52	Backup SRAM data destruction error	The backup SRAM data has been destroyed. Check the battery.
C53	Invalid flash-ROM SEL global data/error list error	The SEL global data/error lists in the flash ROM are invalid.
C54	Flash-ROM SEL global data/error list duplication error	The SEL global data/error lists in the flash ROM are duplicated.
C55	Flash-ROM erase count over error for SEL global data/error lists	The number of time the flash ROM containing SEL global data/error lists can be erased was exceeded.
C56	Timing limit over error (Flash ROM erase)	Error erasing the flash ROM
C57	Flash-ROM verify error (Flash ROM erase)	Error erasing the flash ROM
C58	Flash-ROM ACK timeout error (Flash ROM erase)	Error erasing the flash ROM
C59	Head sector number specification error (Flash ROM erase)	Error erasing the flash ROM
C5A	Sector count specification error (Flash ROM erase)	Error erasing the flash ROM

(In the panel window, the three digits after “E” indicate an error number.)

Error No.	Error name	Description, action, etc.
C5B	Timing limit over error (Flash ROM write)	Error writing the flash ROM
C5C	Flash-ROM verify error (Flash ROM write)	Error writing the flash ROM
C5D	Flash-ROM ACK timeout error (Flash ROM write)	Error writing the flash ROM
C5E	Write-destination offset address error (Flash ROM write)	Error writing the flash ROM
C5F	Write-source data buffer address error (Flash ROM write)	Error writing the flash ROM
C60	No SEL global data/error list write area error	There is no area to write the erased SEL global data/error lists.
C61	SEL-data flash-ROM erase count over error	The number of times the flash ROM containing SEL data can be erased was exceeded.
C62	Operation command error at servo OFF	An attempt was made to execute an operation command when the servo was OFF.
C63	Servo operation condition error	The servo is not in an operation-enabled condition.
C64	Invalid servo acceleration/deceleration error	The internal servo acceleration/deceleration is invalid.
C65	Servo ON/OFF logic error	The servo ON/OFF logic between the main and driver is invalid.
C66	Axis duplication error	An attempt was made to acquire the control right to an axis already in use.
C67	Servo-control-right acquisition error	There is no space in the servo user management area.
C68	Servo-control-right duplicate-acquisition error	The servo control right has already been acquired.
C69	Servo-control-right non-acquisition error	A user who doesn’t have the servo control right attempted to retain the control right.
C6A	Push-motion flag logic error	The internal logic for push-motion processing is invalid.
C6B	Deviation overflow error	The command cannot be followed. Check for operation restriction, wiring, encoder, motor, etc.
C6C	Movement error during absolute data acquisition	Axis movement was detected while acquiring absolute encoder data after the power was turned on. The power may have been turned or a software reset executed while the actuator was moving due to external force such as reactive force of a self-supported cable or while the installation location was vibrating. Or, a software reset may have been executed. Absolute coordinates cannot be confirmed in this condition.
C6D	Maximum installable axes over error	The specified number of axes exceeded the number of installable axes as a result of axis shift with a base command.
C6E	Servo-OFF axis use error	An attempt was made to use an axis whose servo is OFF.
C6F	Home-return incomplete error	Home return has not completed yet. This error may also occur if operation is performed immediately after changing an encoder parameter, performing an absolute encoder reset or resetting an encoder error, without first executing a software reset or reconnecting the power.
C70	Absolute coordinate non-confirmation error	Absolute coordinates have not been confirmed. The power must be reconnected. This error may also occur if operation is performed immediately after changing an encoder parameter, performing an absolute encoder reset or resetting an encoder error, without first executing a software reset or reconnecting the power.

(In the panel window, the three digits after “E” indicate an error number.)

Error No.	Error name	Description, action, etc.
C71	Synchro slave-axis command error	A command was issued to the synchro slave axis.
C72	Overrun error	The overrun sensor was actuated.
C73	Target-locus soft limit over error	The target position or movement locus exceeds a soft limit. * In the case of a SCARA specification, position data may not exist for the applicable axis.
C74	Actual-position soft limit over error	The actual position exceeds a soft limit by the “soft limit/actual position margin” or more.
C75	Motion-data-packet generation logic error	The motion-data-packet generation logic is invalid.
C76	Movement-point count over error	Too many packets are generated simultaneously.
C77	Handling-packet overflow error	The servo handling packets overflowed.
C78	Motion-data-packet overflow error	The servo motion data packets overflowed.
C79	Pole sense operation error	Operation is disabled in the pole sense mode.
C7A	Servo unsupported function error	An attempt was made to use an unsupported function.
C7B	Odd-pulse slide error	Internal servo calculation error
C7C	Odd-pulse processing logic error	Internal servo calculation error
C7D	Packet pulse shortage error	Internal servo calculation error
C7E	Quadratic equation solution error	An error was detected while calculating a quadratic equation solution.
C7F	No valid specified axis error	No valid axes are specified.
C80	Servo-packet calculation logic error	Internal servo calculation error If the controller is of absolute-encoder specification and an “Error No. C74, Actual-position soft limit over error” is also present, an absolute reset may not have been executed correctly and consequently a servo packet calculation overflow occurred due to a current position error. If this is the case, perform an absolute reset again by following the procedure specified in the operation manual. (Performing an “encoder error reset” operation in the absolute reset window alone does not allow the controller to recognize the current position correctly. Always perform an absolute reset by strictly following the specified procedure.)
C81	Operation-amount logic during servo ON	Servo processing logic error
C82	Servo direct command type error	Servo processing logic error
C83	Servo calculation method type error	The servo calculation method type is invalid.
C84	In-use axis servo OFF error	The servo of an axis currently in use (being processed) was turned off.
C85	Non-installed driver error	Driver is not installed for the applicable axis.
C86	Driver servo ready OFF error	The ready signal for the driver of the applicable axis is OFF.
C87	SEL unsupported function error	An attempt was made to use a function not supported by SEL.
C88	Speed specification error	The specified speed is invalid.

(In the panel window, the three digits after “E” indicate an error number.)

Error No.	Error name	Description, action, etc.
C89	Acceleration/deceleration specification error	The specified acceleration/deceleration is invalid.
C8B	Circle/arc calculation logic error	The arc calculation logic is invalid.
C8D	Circle/arc calculation error	Position data that cannot be used in arc movement was specified. Check the position data.
C8E	Point deletion error during command execution	The final point data was deleted while continuous point movement was being calculated.
C8F	Axis operation type error	The axis operation type is invalid. Check “Axis-specific parameter No. 1, Axis operation type” and perform operation appropriate for the operation type specified.
C90	Spline calculation logic error	The spline processing logic is invalid.
C91	Push-motion axis multiple specification error	Two or more push-motion axes were specified.
C92	Push-motion approach distance/speed specification error	The specified push-motion approach distance/speed is invalid.
C93	System output operation error	The user attempted a system output operation (through the port specified by I/O parameter for output function selection or the zone output port specified by axis-specific parameter).
C94	PIO program number error	The program number specified by the PIO is outside the range of 1 to 64.
C95	AUTO program number error	The setting of “Other parameter No. 1, Auto-start program number” is invalid.
C96	Start error from operation-abort program	(This error should not occur now that the specification has been changed.)
C97	Program number error for I/O processing program at operation/program abort	The setting of “Other parameter No. 2, I/O processing program number at operation/program abort” is invalid.
C98	Program number error for I/O processing program at operation pause	The setting of “Other parameter No. 3, I/O processing program number at all operation pause” is invalid.
C99	Home sensor non-detection error	The home sensor cannot be detected. Check the wiring and sensor.
C9A	Creep sensor non-detection error	The creep sensor cannot be detected. Check the wiring and sensor.
C9B	Phase Z non-detection error	Phase Z cannot be detected. Check the wiring and encoder.
C9C	Defective phase-Z position error	The phase-Z position is defective. Normal wear and tear of the mechanical ends and home sensor may also be a reason. Readjustment is necessary.
C9D	Card parameter write error	Error writing card parameters
C9E	Servo calculation overflow error	Internal servo calculation error
CA1	Abnormal absolute-data backup battery voltage (Driver analysis)	Check the connection of the absolute-data backup battery/replace the battery and/or check the encoder cable connection, and then perform an absolute reset.
CA2	Abnormal absolute-data backup battery voltage (Main analysis)	Check the connection of the absolute-data backup battery/replace the battery and/or check the encoder cable connection, and then perform an absolute reset.
CA3	Slave setting data out-of-range error	The data set to the slave is outside the allowable range.
CA4	Slave error response	An error response was returned from the slave.

(In the panel window, the three digits after “E” indicate an error number.)

Error No.	Error name	Description, action, etc.
CA5	Stop deviation overflow error	Movement may have occurred during stopping due to external force or operation may have been restricted during deceleration. This error may also generate when jog operation is restricted (due to contact with an obstacle, contact with a mechanical end before home return, etc.) or when wiring error, faulty encoder or faulty motor is detected during deceleration.
CA6	Palletizing number error	The specified palletizing number is invalid.
CA7	Setting error of even-numbered row count for palletizing zigzag	The set even-numbered row count for palletizing zigzag is invalid.
CA8	Setting error of palletizing pitches	The set palletizing pitches are abnormal.
CA9	Setting error of placement points in palletizing-axis directions	The set X/Y-axis direction counts for palletizing are invalid.
CAA	Palletizing PASE/PAPS non-declaration error	Neither PASE nor PAPS palletizing-setting command is set. Set either command.
CAB	Palletizing position number error	The specified palletizing position number is invalid.
CAC	Palletizing position number setting over	The specified palletizing position number exceeds the position number range calculated for the current palletizing setting.
CAD	Palletizing PX/PY/PZ-axis duplication error	Any two of the specified PX, PY and PZ-axes for palletizing are the same axis.
CAE	Insufficient valid axes for palletizing 3-point teaching data	There are not enough valid axes in the point data for palletizing 3-point teaching. Axes to comprise the palletizing PX/PY planes cannot be specified.
CAF	Excessive valid axes for palletizing 3-point teaching data	There are too many valid axes in the point data for palletizing 3-point teaching. Axes to comprise the palletizing PX/PY planes cannot be specified.
CB0	Mismatched valid axes for palletizing 3-point teaching data	The valid axis pattern in the point data for palletizing 3-point teaching does not match.
CB1	Offset setting error at palletizing 3-point teaching	Zigzag offset (not zero) cannot be set in palletizing 3-point teaching, if the reference point is the same as the end point of the PX-axis.
CB2	BGPA/EDPA pair-end mismatch error	The BGPA/EDPA syntax is invalid. EDPA was declared before BGPA, or another BGPA was declared after BGPA without first declaring EDPA.
CB4	Arch-motion Z-axis non-declaration error	Z-axis has not been declared by PCHZ or ACHZ.
CB5	BGPA non-declaration error during palletizing setting	Palletizing setting cannot be performed without first declaring BGPA. Declare BGPA.
CB6	Palletizing point error	The palletizing points are invalid (non-Z-axis components for arch-motion movement are absent, etc.).
CB7	Arch-trigger non-declaration error	Declare arch triggers using PTRG or ATRG.
CB8	No 3-point teaching setting error at palletizing angle acquisition	The palletizing angle cannot be acquired until setting by palletizing 3-point teaching is complete.
CB9	PX/PY-axis indeterminable error at palletizing angle acquisition	Angle cannot be calculated because there are too many valid axes in the 3-point teaching data and thus PX/PY-axes cannot be specified.
CBA	Reference-axis/PY/PY-axis mismatch error at palletizing angle acquisition	Angle cannot be calculated because the reference axis for angle calculation is neither of the axes comprising the PX/PY-axes as set by 3-point teaching.

(In the panel window, the three digits after “E” indicate an error number.)

Error No.	Error name	Description, action, etc.
CBB	Reference-point/PX-axis end-point duplication error at palletizing angle acquisition	Angle cannot be calculated because the reference point of 3-point teaching is the same as the PX-axis end-point data other than the PZ-axis component and thus arc tangent cannot be calculated.
CBC	Palletizing motion calculation error	Trapezoid control calculation error for palletizing motion
CBD	MOD command divisor 0 error	“0” was specified as the divisor in the MOD command.
CBE	Target-locus boundary over error	The target position or movement locus exceeded the positioning boundary in the infinite-stroke mode.
CBF	Positioning distance overflow error	The positioning distance is too large. If the controller is of absolute-encoder specification and an “Error No. C74, Actual-position soft limit over error” is also present, an absolute reset may not have been executed correctly and consequently a servo packet calculation overflow occurred due to a current position error. If this is the case, perform an absolute reset again by following the procedure specified in the operation manual. (Performing an “encoder error reset” operation in the absolute reset window alone does not allow the controller to recognize the current position correctly. Always perform an absolute reset by strictly following the specified procedure.)
CC0	Axis mode error	The axis mode is invalid.
CC1	Speed change condition error	An attempt was made to change the speed of an axis whose speed cannot be changed (axis operating in S-motion, etc.).
CC2	Driver parameter list number error	The driver parameter list number is invalid.
CC3	Angle error	The angle is invalid.
CC4	SEL data error	The SEL data is invalid.
CC5	Positioning boundary pull-out error	An attempt was made to execute a command not permitted outside the positioning boundary.
CC6	Driver error primary detection	A driver error was found by primary detection.
CC7	Palletizing movement PZ-axis pattern non-detection error	PZ-axis component is not found in the axis pattern during palletizing movement.
CC8	Arch top Z-axis pattern non-detection error	Z-axis component relating to the highest point of arch motion is not found in the axis pattern during arch motion operation.
CC9	Arch trigger Z-axis pattern non-detection error	Z-axis component relating to arch motion is not found in the axis pattern of the arch-trigger declaration point data.
CCA	Arch top/end-point reversing error	The coordinates of highest point and end point are reversed during arch motion operation.
CCB	Arch start-point/trigger reversing error	The coordinates of start point and start-point arch trigger are reversed during arch motion operation.
CCC	Arch end-point/trigger reversing error	The coordinates of end point and end-point arch trigger are reversed during arch motion operation.
CCD	Drive-source cutoff axis use error	An attempt was made to use an axis whose drive source is cut off.
CCE	Error axis use error	An attempt was made to use an axis currently generating an error.
CCF	Palletizing reference-point/valid-axis mismatch error	The PX/PY(/PZ)-axes set by PASE/PCHZ are not valid in the axis pattern of the reference-point data set by PAST.

(In the panel window, the three digits after “E” indicate an error number.)

Error No.	Error name	Description, action, etc.
D01	Encoder EEPROM-write timeout error	The encoder is faulty or failure occurred in the encoder communication.
D02	Encoder EEPROM-read timeout error	The encoder is faulty or failure occurred in the encoder communication.
D03	Encoder count error	Faulty encoder or defective encoder assembly condition is suspected.
D04	Encoder one-revolution reset error	The encoder is faulty or has turned.
D05	Encoder-EEPROM write acceptance error	The encoder is faulty or failure occurred in the encoder communication.
D06	Encoder received-data error	The encoder is faulty or failure occurred in the encoder communication.
D07	Driver logic error	The driver CPU board is in a condition where it cannot operate normally.
D08	Encoder CRC error	The encoder is faulty or failure occurred in the encoder communication.
D09	Driver overspeed error	The motor speed exceeded the upper limit.
D0A	Driver overload error	The power input to the motor exceeded the upper limit.
D0B	Driver EEPROM data error	Failure during write or EEPROM failure
D0C	Encoder EEPROM data error	Failure during write or EEPROM failure
D0E	Axis sensor error	An error occurred in the axis sensor.
D0F	Power stage temperature error	The power stage board exceeded the upper temperature limit.
D10	IPM error	A failure occurred in the motor drive circuit.
D11	Driver abnormal interruption error	The driver CPU board is in a condition where it cannot operate normally.
D12	Encoder disconnection error	The encoder cable is disconnected. The power must be reconnected.
D13	FPGA watchdog timer error	Failure in the interface with the main CPU
D14	Current loop underrun error	Failure in the interface with the main CPU
D15	Driver-CPU down status error	An error occurred in the driver CPU board.
D17	Main-CPU alarm status error	Failure in the interface with the main CPU
D18	Speed loop underrun error	Failure in the interface with the main CPU
D19	Encoder receive timeout error	The encoder is faulty or failure occurred in the encoder communication.
D1A	Driver command error	An error occurred in the CPU bus command.
D1B	Serial bus receive error	Failure in the interface with the main CPU
D1C	Encoder overspeed error	The motor speed exceeded the upper limit.
D1D	Encoder full-absolute status error	The motor speed exceeded the upper limit.
D1E	Encoder counter overflow error	The encoder rotation counter exceeded the upper limit.
D1F	Encoder rotation error	Faulty encoder or defective encoder assembly condition is suspected.

(In the panel window, the three digits after “E” indicate an error number.)

Error No.	Error name	Description, action, etc.
D20	Driver error	(Refer to error No. CA1.)
D22	Encoder rotation reset error	The encoder is faulty or has turned.
D23	Encoder alarm reset error	Faulty encoder
D24	Encoder ID error	The encoder is faulty or failure occurred in the encoder communication.
D25	Encoder configuration mismatch error	The encoder configuration information is outside the function information range.
D26	Motor configuration mismatch error	The motor configuration information is outside the function information range.
D50	Fieldbus error (FBMIRQ timeout)	A FBMIRQ timeout was detected. Check the statuses of monitor LEDs on the front panel of the board by referring to the operation manual for the field network board.
D51	Fieldbus error (FBMIRQ reset)	A FBMIRQ reset error was detected. Check the statuses of monitor LEDs on the front panel of the board by referring to the operation manual for the field network board.
D52	Fieldbus error (FBMBSY)	A FBMBSY was detected. Check the statuses of monitor LEDs on the front panel of the board by referring to the operation manual for the field network board.
D53	Fieldbus error (BSYERR)	A BSYERR was detected. The power must be reconnected. Check the statuses of monitor LEDs on the front panel of the board by referring to the operation manual for the field network board.
D54	Window lock error (LERR)	A LERR was detected. The power must be reconnected. Check the statuses of monitor LEDs on the front panel of the board by referring to the operation manual for the field network board.
D55	Fieldbus error (Min busy)	A Min busy error was detected. Check the statuses of monitor LEDs on the front panel of the board by referring to the operation manual for the field network board.
D56	Fieldbus error (MinACK timeout)	A Min ACK timeout was detected. Check the statuses of monitor LEDs on the front panel of the board by referring to the operation manual for the field network board.
D57	Fieldbus error (MoutSTB timeout)	A Mout STB timeout was detected. Check the statuses of monitor LEDs on the front panel of the board by referring to the operation manual for the field network board.

(In the panel window, the three digits after “E” indicate an error number.)

Error No.	Error name	Description, action, etc.
D58	Fieldbus error (INIT timeout)	An INIT timeout was detected. Check the statuses of monitor LEDs on the front panel of the board by referring to the operation manual for the field network board.
D59	Fieldbus error (DPRAM write/read)	A DPRAM write/read error was detected. Check the statuses of monitor LEDs on the front panel of the board by referring to the operation manual for the field network board.
D5A	Fieldbus error (TOGGLE timeout)	A TOGGLE timeout was detected. Check the statuses of monitor LEDs on the front panel of the board by referring to the operation manual for the field network board.
D5B	Fieldbus error (Access-privilege retry over)	An access-privilege retry over error was detected. Check the statuses of monitor LEDs on the front panel of the board by referring to the operation manual for the field network board.
D5C	Fieldbus error (Access-privilege open error)	An access-privilege open error was detected. Check the statuses of monitor LEDs on the front panel of the board by referring to the operation manual for the field network board.
D5D	Fieldbus error (FBRS link error)	A FBRS link error was detected. Check the statuses of monitor LEDs on the front panel of the board by referring to the operation manual for the field network board.
D5E	Fieldbus error (Mailbox response)	A mailbox response error was detected. Check the statuses of monitor LEDs on the front panel of the board by referring to the operation manual for the field network board.
D60	Expanded-SIO 2/4 CH insulation power error	An Expanded-SIO insulation power error was detected.
D61	Expanded-SIO 1/3 CH insulation power error	An Expanded-SIO insulation power error was detected.
D62	Expanded-SIO baud-rate-generator clock oscillation error	An Expanded-SIO clock oscillation error was detected.
D63	Expanded-SIO UART paging error	An Expanded-SIO paging error was detected.
D64	Expanded-SIO assignment error	The “board channel assignment number” or “expanded-I/O slot assignment number” in I/O parameter Nos. 100, 102, 104, 106, 108 or 110 may be outside the input range or duplicated, a serial communication expansion board may not be installed in the specified slot, or a “communication mode” other than RS232C may have been selected when the “board channel assignment number” is other than “1” or “2,” among other reasons.
D67	Motor/encoder configuration information mismatch error	The “motor/encoder configuration information” (motor identification number and encoder identification number) in driver parameter No. 26 does not match the “motor/ encoder configuration information” (motor identification number and encoder identification number) in encoder parameter No. 11. Check the parameter values, encoder cable connection, etc.

(In the panel window, the three digits after “E” indicate an error number.)

Error No.	Error name	Description, action, etc.
D68	No remote-mode control support board error	Hardware supporting remote-mode control is not installed, although remote-mode control (AUTO/MANU) is specified in I/O parameter No. 79.
D69	External terminal block overcurrent or power-supply error	Overcurrent or power-supply error in the external terminal block
D6A	Hardware unsupported function error	An attempt was made to use a function not supported by the hardware.
D6B	Overrun error	The overrun sensor was actuated.
D6C	Actual-position soft limit over error	The actual position exceeded a soft limit by the “soft limit/actual position margin” or more.
D6D	Logic error	A logic error occurred.
D6E	Motor drive-source OFF error (MPONSTR-OFF)	A drive-source OFF (MPONSTR-OFF) signal was detected in a non-shutdown (SHDWNSTR-OFF) mode.
D71	Multi-slider parameter error	An invalid multi-slider parameter setting. Check “Axis-specific parameter No. 104, Target axis specification for multiple-slider near-miss detection,” etc. Possible causes include specification of an invalid axis number, specification of unmatched axis numbers for both sliders, specification of an adjacent axis number not physically possible based on linear axis structure, and specification of a synchro slave axis number.
E01	DMA address error	DMA transfer error
E02	SCIF send-buffer overflow error	The SCIF send buffer overflowed.
E03	SCI send-buffer overflow error	The SCI send buffer overflowed.
E04	SCIF receive-buffer overflow error	The SCIF receive buffer overflowed. Excessive data was received from outside.
E05	SCI receive-buffer overflow error	The SCI receive buffer overflowed. Excessive data was received from the slave.
E06	Receive timeout error (Slave communication)	Response from the slave cannot be recognized.
E07	SCI overrun error (Slave communication)	Communication failure. Check for noise, circuit failure and slave card.
E08	SCI framing error (Slave communication)	Communication failure. Check for noise, shorting, circuit failure and slave card.
E09	SCI parity error (Slave communication)	Communication failure. Check for noise, shorting, circuit failure and slave card.
E0A	SCI CRC error (Slave communication)	The CRC in the message is invalid.
E10	SCIF communication mode error	The communication mode is invalid.
E11	SCI communication mode error	The communication mode is invalid.
E12	SIO-bridge SCIF send-queue overflow error	The send queue overflowed.
E13	SIO-bridge SCI send-queue overflow error	The send queue overflowed.

(In the panel window, the three digits after “E” indicate an error number.)

Error No.	Error name	Description, action, etc.
E14	SCI receive-data-register full wait timeout error	Communication failure. Check for noise, shorting, circuit failure and slave card.
E15	SCI overrun error	Communication failure. Check for noise, shorting, circuit failure and slave card.
E16	Program end confirmation timeout error	The program cannot be ended.
E17	I/O-processing-program start logic error	The I/O-processing-program start logic is invalid.
E18	Task ID error	The task ID is invalid.
E19	WAIT factor error	The WAIT factor is invalid.
E1A	WAIT logic error	The WAIT logic is invalid.
E1B	Point-data valid address error	Point-data valid address is not set.
E1C	Source data error	The source data is invalid.
E1D	Unaffected output number error	The unaffected output number is invalid. A value other than an output port number (“0” is acceptable) may be input in I/O parameter Nos. 70 to 73.
E1E	Zone parameter error	A value other than an output port/global flag number (“0” is acceptable) or duplicate numbers may be input in axis-specific parameter Nos. 88, 91, 94 and 97, or the output number specified as system output in the I/O parameter for output function selection may be duplicated, among other reasons.
E1F	I/O assignment parameter error	A value other than an I/O port number (“-1” is acceptable) or other than an I/O head port number + [multiple of 8] may be input in I/O parameter Nos. 2 to 9, or a value other than a [multiple of 8] may be input in I/O parameter Nos. 14 to 17.
E20	I/O assignment duplication error	I/O assignments are duplicated. Check I/O parameter Nos. 2 to 9 and 14 to 17 and the I/O slot card type (number of I/Os), etc.
E21	I/O assignment count over error	The I/O assignments exceed the specified range. Check I/O parameter Nos. 2 to 9 and 14 to 17 and the I/O slot card type (number of I/Os).
E22	Header error (Slave communication)	The header in the message received from the slave card is invalid.
E23	Card ID error (Slave communication)	The card ID in the message received from the slave card is invalid.
E24	Response type error (Slave communication)	The response type in the message received from the slave card is invalid.
E25	Command type error (Slave communication)	The command type of the transmitting command is invalid.
E26	Target type error	The target type is invalid.
E27	No target error	Target (driver card, I/O card, encoder or other slave card) is not installed.
E29	EEPROM error (EWEN/EWDS not permitted)	EEPROM access error (when writing)
E2A	Read compare mismatch error during EEPROM write	EEPROM access error (when writing)
E2B	Abnormal response error when sending EEPROM information acquisition command	An abnormal response was received when a slave-EEPROM information acquisition command was sent.
E2C	Maximum receive size over error when sending EEPROM information acquisition command	The maximum receive size exceeds the limit value when a slave-EEPROM information acquisition command is sent.

(In the panel window, the three digits after “E” indicate an error number.)

Error No.	Error name	Description, action, etc.
E2D	Receive-data checksum error when sending EEPROM information acquisition command	The checksum of receive data is invalid when a slave-EEPROM information acquisition command is sent.
E2E	No required power stage error	The required power stage is not installed for the valid axes.
E2F	No required regenerative resistance error	The required regenerative resistance is not installed for the valid axes.
E30	No required motor-drive power error	The required motor-drive power is not installed for the valid axes.
E31	No standard I/O slot error	Standard I/O unit is not installed.
E32	No control power error	Control power unit is not installed.
E33	Slave response logic error	The slave response logic is invalid.
E34	Slave block number out of range	The slave block number is out of range.
E37	Slave data setting prohibited	Setting of slave data is prohibited.
E38	Faulty slave EEPROM	The slave EEPROM is faulty.
E39	No encoder EEPROM error	The encoder is not equipped with EEPROM.
E3A	Absolute encoder error	Absolute encoder is specified illegally.
E3C	Undefined slave-command error code detected	An undefined slave-command error code was detected.
E3D	SEL program/point/parameter flash ROM status error	Data is not written to the flash ROM correctly or written in an old, incompatible application version.
E3E	Parameter checksum error	The flash ROM data has been destroyed.
E3F	Gain parameter error	The setting of “Axis-specific parameter No. 60, Position gain,” etc., is invalid.
E40	Rotational-movement axis parameter error	Check axis-specific parameter Nos. 67, 66, 38, 37, 1, etc.
E41	Servo-motion data packet shortage error	There are not enough servo-motion data packets.
E42	Servo job error	The servo job is invalid.
E45	Servo undefined command detection error	An undefined command was detected during servo processing.
E46	Maximum receive size over error at absolute-data acquisition	The receive size is too large when acquiring absolute data.
E47	No normal response error at absolute-data acquisition	Normal response is not received when acquiring absolute data.
E49	Encoder rotation error	An encoder rotation error was detected.
E4A	Encoder rotation counter overflow error	An encoder rotation counter overflow error was detected.
E4B	Encoder count error	An encoder count error was detected.
E4C	Encoder overspeed error	An encoder overspeed error was detected.
E4D	Driver phase-Z detection logic error	A phase-Z detection completion status was notified from the driver in a mode other than the phase-Z detection operation mode.
E4E	Phase-Z count parameter error	Check axis-specific parameter Nos. 23, 38, 37, etc.
E4F	Synchro parameter error	Check axis-specific parameter Nos. 65, 39, all-axis parameter No. 1, etc.

(In the panel window, the three digits after “E” indicate an error number.)

Error No.	Error name	Description, action, etc.
E50	Driver special command ACK-timeout error	ACK cannot be detected for the driver special command.
E51	Drive unit error (DRVESR)	Error notification from the driver
E52	Encoder error (DRVESR)	Error notification from the driver
E53	Driver CPU error (DRVESR)	Error notification from the driver
E54	Servo control error (DRVESR)	Error notification from the driver
E55	Command error (DRVESR)	Error notification from the driver
E56	Motor temperature error (DRVESR)	Error notification from the driver
E58	Servo ON/OFF timeout error	Servo ON/OFF cannot be confirmed.
E59	Brake ON/OFF timeout error	Brake ON/OFF cannot be confirmed.
E5A	Pole sense non-detection error	Motor magnetic pole cannot be detected.
E5B	Detection OFF error upon pole sense completion	The motor-magnetic-pole detection status bit (Psenex) is turned OFF after completion of pole sense.
E5C	Hold-at-stop servo job error	The servo job is invalid.
E5D	Servo packet error	The servo packets are invalid.
E5E	Servo-control-right management array number error	The servo-control-right management array number is invalid.
E5F	Length conversion parameter error	Check axis-specific parameter Nos. 47, 50, 51, 42, 1, etc.
E60	Slave maximum receive size over error	The slave receive size is too large.
E61	Slave no normal response reception error	Normal response cannot be received from the slave.
E62	Sending-slave CPU type error	The CPU type of the sending slave is invalid.
E63	Message-buffer information type error	The message-buffer information type is invalid.
E64	Abnormal standby power detection error	Abnormal standby power was detected.
E65	Regenerative resistance temperature error	A regenerative resistance temperature error was detected.
E66	AC-power overvoltage error	An AC-power overvoltage error was detected.
E67	Motor-power overvoltage error	A motor-power overvoltage error was detected.
E68	Emergency-stop status requiring reset recovery (not error)	Reset the emergency stop and then reconnect the power.
E69	Abnormal 24-V I/O power source	The 24-V I/O power source is abnormal. (Turn on the 24-V power before turning on the control power.)
E6A	Safety-gate open status requiring reset recovery (not error)	Close the safety gate and then reconnect the power.
E6B	Shutdown factor indeterminable error	Shutdown factor cannot be determined.
E6C	DO output current error	The DO output current is abnormal.

(In the panel window, the three digits after “E” indicate an error number.)

Error No.	Error name	Description, action, etc.
E6D	Drive-source cutoff relay error	The drive-source cutoff relay may have been melted. When turning on the power to a Q type controller, turn on the control power first, confirm that the SDN contacts are closed, and then turn on the drive power. (This error generates when the control power and drive power have been turned on simultaneously.)
E6E	Power-stage rating (W) mismatch error	A power stage with inappropriate rated capacity (W) is installed.
E6F	Power-stage rating (V) mismatch error	A power stage with inappropriate rated voltage (V) is installed.
E70	Motor-drive power rating (V) mismatch error	A motor-drive power source with inappropriate rated voltage (V) is installed.
E71	Encoder configuration information outside supported function information range	An encoder whose configuration information is outside the range supported by the driver unit is installed.
E72	Motor configuration information outside supported function information range	A motor whose configuration information is outside the range supported by the driver unit is installed.
E73	Encoder resolution mismatch error	The encoder resolution in the system’s axis-specific parameter and that of the installed encoder do not match.
E74	Encoder division ratio mismatch error	The encoder division ratio in the system’s axis-specific parameter and that of the installed encoder do not match.
E75	Encoder linear/rotary type mismatch error	The encoder linear/rotary type in the system’s axis-specific parameter and that of the installed encoder do not match.
E76	Encoder ABS/INC type mismatch error	The encoder ABS/INC type in the system’s axis-specific parameter and that of the installed encoder do not match.
E77	Magnetic-pole sensor installation specification mismatch error	The magnetic-sensor installation specification in the system’s axis-specific parameter and that of the installed encoder do not match.
E78	Brake installation specification mismatch error	The brake installation specification in the system’s axis-specific parameter and that of the installed encoder do not match.
E79	Abnormal response error when sending EEPROM-data setting slave command	An abnormal response was received when an EEPROM-data setting slave command was sent.
E7A	Maximum receive size over error when sending EEPROM-data setting slave command	The receive size exceeded the limit value when an EEPROM-data setting slave command was sent.
E7B	Motor-drive power ON timeout error	Abnormal current flow from the motor-drive power source
E7C	Register read/write test error	Error reading/writing the register
E7D	Linear-movement axis parameter error	Check axis-specific parameter Nos. 38, 68, 1, etc.
E7E	Parameter error	The parameter is invalid.
E7F	Stroke parameter error	Check axis-specific parameter Nos. 7, 8, 1, etc.
E80	Unsupported card error	An unsupported card is installed in an I/O slot.
E81	Priority auto-assignment card non-detection error	Priority auto-assignment card cannot be detected.
E82	Card mismatch error	The combination or positioning of I/O slot cards has a problem.

(In the panel window, the three digits after “E” indicate an error number.)

Error No.	Error name	Description, action, etc.
E83	I/O slot card error	The I/O slot card is invalid.
E84	Resolution parameter error	Check axis-specific parameter Nos. 47, 50, 51, 44, 42, 43, 1, 37, etc.
E85	Driver ready OFF factor indeterminable error	Driver ready OFF factor cannot be determined.
E86	Fieldbus error (FBVCCER)	A fieldbus error (FBVCCER) was detected.
E87	Fieldbus error (FBPOWER)	A fieldbus error (FBPOWER) was detected.
E88	Power error (Other)	A power error (Other) was detected. This error also generates when the power OFF → ON interval is short. After the power has been turned off, be sure to wait for at least 5 seconds before turning it back on. Abnormal regenerative resistance temperature is also suspected.
E89	SCIF open error in non-AUTO mode (Servo in use)	In a mode other than AUTO, opening of the serial 1 channel (also used by the PC software/TP port) from a SEL program is prohibited while the servo is in use (to ensure safety).
E8A	SEL program flash-ROM status error	Data is not written to the flash ROM correctly or written in an old, incompatible application version.
E8B	Symbol definition table flash-ROM status error	Data is not written to the flash ROM correctly or written in an old, incompatible application version.
E8C	Point data flash-ROM status error	Data is not written to the flash ROM correctly or written in an old, incompatible application version.
E8D	Parameter flash-ROM status error	Data is not written to the flash ROM correctly or written in an old, incompatible application version.
EB2	Flash busy reset timeout (Core detection)	Flash ROM operation error. The flash ROM cannot be reset and remains busy.

(In the panel window, the three digits after “E” indicate an error number.)

Error No.	Error name	Description, action, etc.
FF0 ~ F00	Shutdown error (hi_sysdwn () definition)	A shutdown error (hi_sysdwn () definition) was detected.
F03 ~ F58	Shutdown error (OS call error)	A shutdown error (OS call error) was detected.
F60	System-down level error-call procedure error	A system-down level error-call procedure error was detected.
F61	Interpreter-task end task ID error	An interpreter-task end task ID error was detected.
F62	Abnormal standby power detection error	Abnormal standby power was detected.
F63	Regenerative resistance temperature error	A regenerative resistance temperature error was detected.
F64	AC-power overvoltage error	An AC-power overvoltage error was detected.
F65	Motor-power overvoltage error	A motor-power overvoltage error was detected.
F66	Servo control underrun error	A servo control underrun error was detected.
F67	FROM-write bus width error	A write operation other than 32-bit long word access was detected while writing the flash ROM.
F68	FROM write protect error	Write operation to a write-protected flash ROM area (FRMWE bit in DEVCTR = 1) was detected.
F69	Boot watchdog error	A FPGA boot watchdog was detected. The core program may not be running properly.
F6A ~ FA0	Undefined exception/interruption error	An undefined exception/interruption occurred.
FB0	TMU0 interruption error	A TMU0 interruption error was detected.
FB1	Application code SDRAM copy error (Checksum)	The sum of 4 bytes does not match between the corresponding sections after FROM → SDRAM program copy.
FB2	Installed flash ROM type mismatch (Application)	The flash ROM type anticipated in the software does not match the flash ROM type actually installed. Check the combination of software and hardware.
FB8	Undefined NMI error	An undefined NMI interruption occurred.

⊙ Error List (MAIN core) (In the panel window, the three digits after “E” indicate an error number.)

Error No.	Error name	Description, action, etc.
A70	SCIF overrun error	Communication error. Check for noise, connected equipment and communication setting. (When updating the application, connect to a PC and use IAI’s update tool.)
A71	SCIF framing error	Communication error. Check for noise, shorted/disconnected communication cable, connected equipment and communication setting. (When updating the application, connect to a PC and use IAI’s update tool.)
A72	SCIF parity error	Communication error. Check for noise, shorted/disconnected communication cable, connected equipment and communication setting. (When updating the application, connect to a PC and use IAI’s update tool.)
A73	IAI protocol header error	Communication protocol error. Check for noise and connected equipment. (When updating the application, connect to a PC and use IAI’s update tool.)
A74	IAI protocol terminal ID error	Communication protocol error. Check for noise and connected equipment. (When updating the application, connect to a PC and use IAI’s update tool.)
A75	IAI protocol command ID error	Communication protocol error. Check for noise and connected equipment. (When updating the application, connect to a PC and use IAI’s update tool.)
A76	IAI protocol checksum error	Communication protocol error. Check for noise and connected equipment. (When updating the application, connect to a PC and use IAI’s update tool.)
A77	Motorola S record type error	The update program file is invalid. Check the file.
A78	Motorola S checksum error	The update program file is invalid. Check the file.
A79	Motorola S load address error	The update program file is invalid. Check the file.
A7A	Motorola S write address over error	The update program file is invalid. Check the file.
A7B	Flash timing limit over error (Write)	Error writing the flash ROM (When updating)
A7C	Flash timing limit over error (Erase)	Error erasing the flash ROM (When updating)
A7D	Flash verify error	Error erasing/writing the flash ROM (When updating)
A7E	Flash ACK timeout	Error erasing/writing the flash ROM (When updating)
A7F	Head sector number specification error	Error erasing the flash ROM (When updating)
A80	Sector count specification error	Error erasing the flash ROM (When updating)
A81	Write-destination offset address error (Odd-numbered address)	The address written during flash ROM write (when updating) is invalid. Check the update program file.
A82	Write-source data buffer address error (Odd-numbered address)	Error writing the flash ROM (When updating)
A83	Invalid code sector block ID error	The flash ROM is new, or the program currently written to the flash ROM is invalid because the last update was aborted. The ROM can be updated without problem.
A84	Code sector block ID erase count over	The number of times the flash ROM was erased exceeded the allowable count.

(In the panel window, the three digits after “E” indicate an error number.)

Error No.	Error name	Description, action, etc.
A85	FROM write request error before erase is complete	When updating, a flash-ROM write command was received before a flash-ROM erase command. Confirm that the update program file is valid and then perform update again.
A86	Absolute-encoder backup battery voltage-low warning (Driver detection)	The voltage of the absolute-data backup battery is low. Check the battery connection or replace the battery.
A87	Motorola S-byte count error (Core detection)	The update program file is invalid. Check the file.
A88	Message conversion error (Core detection)	The received message does not conform to the message format or contains invalid data. Check the message sent from the host communication device.
A89	Updating target non-specification error (Core detection)	During update, an update command was received before the updating target was specified properly. Check if an appropriate updating PC tool is used and the target specification and other settings in the updating PC tool are correct.
A8A	Updating system code error (Core detection)	The system code in the message received with the updating target specification command does not match the controller system. Check the target specification and other settings in the updating PC tool.
A8B	Updating unit code error (Core detection)	The unit code in the message received with the updating target specification command does not match any updatable unit in the controller. Check the target specification and other settings in the updating PC tool.
A8C	Updating device number error (Core detection)	The specified device number in the message received with the updating target specification command is not appropriate. Check the target specification and other settings in the updating PC tool.
A8D	Flash busy reset timeout (Core detection)	Error erasing/writing the flash ROM
CD0	Drive error (Driver detection)	Error notification from the driver
CD1	Encoder error (Driver detection)	Error notification from the driver
CD2	Driver CPU error (Driver detection)	Error notification from the driver
CD3	Servo control error (Driver detection)	Error notification from the driver
CD4	Command error (Driver detection)	Error notification from the driver
CD5	Motor temperature error (Driver detection)	Error notification from the driver

* If “X-SEL only” or “SCARA only” is not specified in the “Description, action, etc.” field, basically the error is common to both specifications.

(In the panel window, the three digits after “E” indicate an error number.)

Error No.	Error name	Description, action, etc.
E90	Core code flash-ROM status error	The core program is invalid. Contact the manufacturer.
E91	Application code flash-ROM status error	The application program is invalid. Contact the manufacturer.
E92	Core code sum error	The core program is invalid. Contact the manufacturer.
E93	Application code sum error	The application program is invalid. Contact the manufacturer.
E94	Timing limit over error (Flash erase)	Error erasing the flash ROM
E95	Flash verify error (Flash erase)	Error erasing the flash ROM
E96	Flash ACK timeout (Flash erase)	Error erasing the flash ROM
E97	Head sector number specification error (Flash erase)	Error erasing the flash ROM
E98	Sector count specification error (Flash erase)	Error erasing the flash ROM
E99	Timing limit over error (Flash write)	Error writing the flash ROM
E9A	Flash verify error (Flash write)	Error writing the flash ROM
E9B	Flash ACK timeout (Flash write)	Error writing the flash ROM
E9C	Write-destination offset address error (Flash write)	Error writing the flash ROM
E9D	Write-source data buffer address error (Flash write)	Error writing the flash ROM
E9E	Watchdog reset occurrence error	A WDT (watchdog timer) was manually reset (error detection).
E9F	Exception occurrence error while BL = 1 (NMI)	An exception occurred while the block bit in the CPU status register was “1.” (NMI)
EA0	Exception occurrence error while BL = 1 (Other than NMI)	An exception occurred while the block bit in the CPU status register was “1.” (Other than NMI)
EA1	Bit exception reset due to command/data TLB duplication	This reset occurs when there are multiple TLB entries corresponding to the virtual address.
EA2	Undefined exception/interruption error	An undefined exception/interruption occurred.
EA3	AC-power cutoff detection error	An AC-power cutoff was detected.
EA4	Abnormal standby power detection error	Abnormal standby power was detected.
EA5	Regenerative resistance temperature error	A regenerative resistance temperature error was detected.
EA6	AC-power overvoltage error	An AC-power overvoltage error was detected.
EA7	Motor-power overvoltage error	A motor-power overvoltage error was detected.
EA8	FROM-write bus width error	A write operation other than 32-bit long word access was detected while writing the flash ROM.
EA9	FROM write protect error	Write operation to a write-protected flash ROM area (FRMWE bit in DEVCTR = 1) was detected.
EAA	SDRAM write/read test error	The SDRAM is faulty. Contact the manufacturer.
EAB	Application-update SCIF send-queue overflow error	An overflow occurred in the send queue.

(In the panel window, the three digits after “E” indicate an error number.)

Error No.	Error name	Description, action, etc.
EAC	Servo control underrun error	A servo control underrun error was detected.
EAD	Boot error	A FPGA boot watchdog was detected. The core program may not be running properly.
EAE	Application-update SCIF receive-queue overflow error	Excessive data is received from outside. (Confirm that a PC and IAI’s update tool are used to update the application.)
EAF	Installed flash ROM type mismatch (Core)	The flash ROM type anticipated in the software does not match the flash ROM type actually installed. Check the combination of software and hardware.
EB0	Undefined NMI error (Core)	An undefined NMI interruption occurred.

* If “X-SEL only” or “SCARA only” is not specified in the “Description, action, etc.” field, basically the error is common to both specifications.

⊙ Troubleshooting of X-SEL Controller

The X-SEL Controller has a panel window on its front face.
Error numbers will be displayed in this panel window.
When the power is turned on, normally “rdy” or “Ardy” will be displayed. “P01” or other code will be displayed while a program is running.
When an error generates, the panel window will show “EA1D” or other code starting with “E.” (Some errors do not begin with “E.”)

Status	Panel window display
After turning on the power	rdy, Ardy
Program is running	P01, P64, etc.
Error has generated	EA1D, ED03, etc.

* Among the alphabets, B and D are shown in lower case.

Depending on the error number, it may be possible to reset the error after removing the cause of the error, or the power must be reconnected to reset the error.
Also, some error numbers are output to the LED display in the panel window, while others are not.
For details, see “⊙ Error Level Control.”

Troubleshooting (Causes and Countermeasures for Key Errors)

Error No.	Error name	Cause	Countermeasure
ACF	AC power cutoff	Momentary power failure has occurred or the voltage has dropped. 100 V is input while the controller's voltage specification is 200 V.	Check the power-source voltage. If the last digit of the controller's model number is "-1," the power specification is 100 V. If the last digit is "-2," the power specification is 200 V.
ErG	Emergency stop (This is not an error.)	Emergency-stop signal is input.	Emergency-stop signal is input in the following condition: 1. The emergency-stop button on the teaching pendant is pressed. 2. The applicable input terminal in the system connector is turned ON. 3. The port switch on the front panel is set to the manual side. (The teaching-pendant/PC-software connector is not connected.) 4. The actuator is of sensor specification and the slider is stopped on either end of the slider.
oPG	Safety gate open	The safety gate is open.	Check the system connector wiring.
dSF	Deadman switch OFF	The switch is set to the manual side even when the teaching connector or other connector is not connected.	Set the switch to the auto side when the teaching connector or other connector is not connected.
C9C	Defective phase-Z position error	The phase-Z position is defective or the reversing amount at home return is small.	Check to see if foreign object has entered the actuator. Check to see if the mounting bolts are contacting the slider. * Change axis-specific parameter No. 22 to "100"

Error No.	Error name	Cause	Countermeasure
914 CA2	Abnormal absolute-data backup battery voltage	The PG cable was disconnected from the controller. Absolute reset has not been executed after the initial setup. The voltage of the absolute-data backup battery has dropped.	Connect the PG cable to the controller and execute an absolute reset. Replace the absolute-data backup battery and execute an absolute reset.
CA5	Stop deviation overflow error	Operation is mechanically disabled. If there is no problem in the mechanical function, the power stage board is faulty.	Check to see if the actuator mounting bolts are contacting inside the axes, or if the slider attachment is contacting any surrounding mechanical parts. Replace the board.
C6b	Deviation overflow error	Operation is mechanically disabled.	Check to see if the actuator mounting bolts are contacting inside the axes, or if the slider attachment is contacting any surrounding mechanical parts.
d03	Faulty encoder or attachment of dust	The encoder is faulty or dust is attached.	Remove the motor cover and apply cleaning air spray for OA equipment, etc., over the cord wheel. If the problem persists, replace/readjust the encoder.
d06	Encoder received-data error	The encoder cable is disconnected.	Replace the encoder cable.
d10	IPM error	The motor coil is damaged.	Measure relative resistance among phases U/V/W. If the resistance values are different, the coil has been burned. Replace the motor. If the resistance values are almost the same, the coil has not been burned.
		If the motor coil is not damaged, the power stage board (to which the motor power cable is connected) is faulty.	Replace the board.
d19	Encoder receive timeout error	The encoder cable is disconnected.	Replace the encoder cable.

Error No.	Error name	Cause	Countermeasure
d18	Speed loop underrun error	The driver CPU board was damaged due to noise in the encoder cable.	Replace the board and implement noise control measures.
807	Shutdown relay ER status	The transistor on the power-supply board (to which the power cable is connected) is damaged.	Replace the board.

Servo Gain Adjustment

Since the servo has been adjusted at the factory in accordance with the standard specification of the actuator, the servo gain need not be changed in normal conditions of use.
However, vibration or noise may occur depending on how the actuator is affixed, specific load condition, and so on, and therefore the parameters relating to servo adjustment are disclosed to allow the customer to take quick actions should adjustment become necessary.
Particularly with custom models (whose ball screw lead or stroke is longer than that of the standard model), vibration/noise may occur due to external conditions.
In these cases, the parameters shown below must be changed. Contact IAI for details.

● Position Gain

Axis-specific parameter number	Unit	Input range	Default (reference)
60	/ sec	0 ~ 9999	30

This parameter determines the level of response with respect to a position control loop.
Increasing the setting improves compliance with the position command.
However, increasing the setting too much increases the tendency of the actuator to overshoot.
If the setting is low, compliance with the position command drops and the positioning time increases as a result.

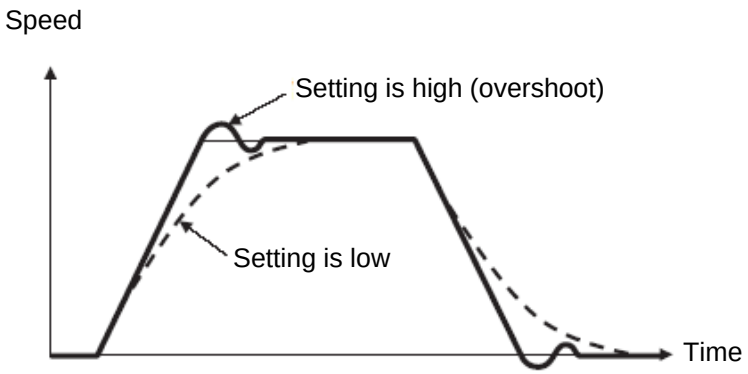

● Speed Loop Gain (Parameter List 1)

Driver card parameter number	Unit	Input range	Default (reference)
43	-	1 ~ 32767	500

This parameter determines the level of response with respect to a speed control loop.
Increasing the setting improves compliance with the speed command (i.e., servo rigidity increases).
The greater the load inertia, the higher the setting should be.
However, increasing the setting too much increases the tendency of the actuator to overshoot or oscillate, resulting in increased mechanical vibration.

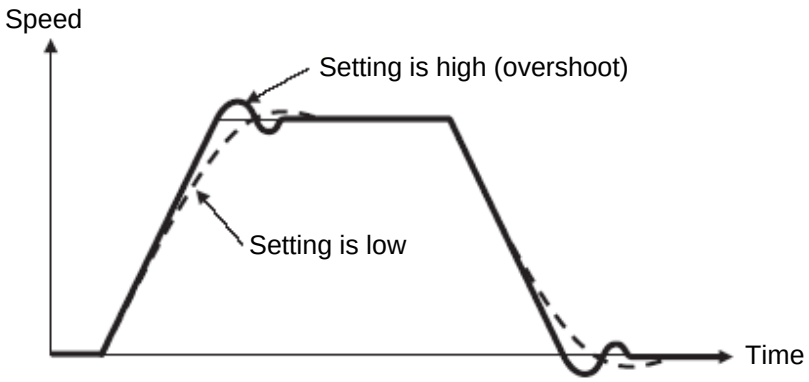

● Speed Loop Integral Time Constant (Parameter List 1)

Driver card parameter number	Unit	Input range	Default (reference)
44	-	1 ~ 1000	30

This parameter determines the level of response with respect to a speed control loop.
Increasing the setting too much results in lower response with the speed command and decreases the reactive force upon load change. If the setting is low, compliance with the position command also drops and the positioning time increases as a result.
Decreasing the setting too much increases the tendency of the actuator to overshoot or oscillate, resulting in increased mechanical vibration.

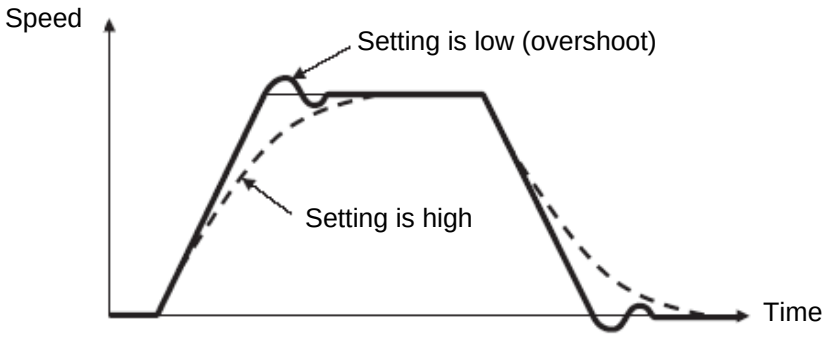

● Current Loop Control Band Number

Driver card parameter number	Unit	Input range	Default (reference)
46	-	0 ~ 4	4

This parameter is used to set the control band of the PI current control system.
Normally this parameter need not be changed. If the parameter is changed carelessly, stability of the control system may be affected and a very dangerous situation may occur.
However, changing this parameter may be effective in certain situations, such as when you want to suppress resonance.
If you wish to change this parameter, contact IAI.

● Torque Filter Time Constant (Parameter List 1)

Driver card parameter number	Unit	Input range	Default (reference)
45	-	1 ~ 2500	0

This parameter determines the filter time constant applicable to the torque command.
If the mechanical resonance frequency is equal to or lower than the servo loop response frequency, the motor will vibrate.
This mechanical resonance can be suppressed by increasing the setting of this parameter.
It should be noted, however, that increasing the setting too much may affect the stability of the control system.

Trouble Report Sheet

Trouble Report Sheet				Date:	
Company name		Department		Reported by	
TEL	(Ext)	FAX			
IAI agent		Purchase date			
Serial number		Manufacture date			

[1] Number of axes ☐ axis(es) 1 = _____ 2 = _____
Type 3 = _____ 4 = _____
5 = _____ 6 = _____
7 = _____ 8 = _____

[2] Type of problem
1. Disabled operation 2. Position deviation 3. Runaway machine
4. Error Error code = ☐☐☐
5. Other ( )

[3] Problem frequency and condition
Frequency =
Condition _____
_____
_____
_____
_____

[4] When did the problem occur?
1. Right after the system was set up
2. After operating for a while (Operating hours: _____ year(s) and _____ month(s))

[5] Operating direction
1. Horizontal 2. Horizontal + Vertical

[6] Load condition
1. Load transfer 2. Push-motion operation 3. Load: Approx. _____ kg
4. Speed: Approx. _____ mm/sec

[7] Special specification (option, etc.)

X-SEL-P/Q Controller, Manual No.: 0608-4E, Version MJ0148-4A-E (Oct. 2007)

IAI
Quality and Innovation

IAI Industrieroboter GmbH
Ober der Röth 4, D-65824 Schwalbach am Taunus
Germany
Tel.:+49-6196-8895-0
Fax: 06196-889524-24
E-Mail: info@IAI-GmbH.de
Internet: http://www.eu.IAI-GmbH.de

IAI America Inc.
2690 W. 237th Street, Torrance, CA 90505, USA
Tel.: +1-310-891-6015 Fax: +1-310-891-0815

IAI CORPORATION
645-1 Shimizu Hirose, Shizuoka 424-0102, Japan
Tel.: +81-543-64-5105 Fax: +81-543-64-5182

The information contained in this document is subject to change without notice for the purpose of product improvement.
Copyright © 2007 IAI Corporation. All rights reserved.